ANDERSEN®
WINDOWS & DOORS

A-SERIES

ARCHITECTURAL AUTHENTICITY
WITH UNPARALLELED PERFORMANCE.

2023-24 PRODUCT GUIDE FOR PROFESSIONALS

CONTENTS

Innovation & Performance 2-3
Design 4-5
Window & Door Types 7
Exteriors & Interiors 8-9
Window Hardware 11
Patio Door Hardware 12-13
Glass 14-15
Art Glass & Insect Screens 16-17
Grilles 19
Easy Connect Joining System 20

A-SERIES WINDOWS

Windows 21
- Casement Windows 26
- Awning Windows 32
- Double-Hung Windows 38
- Picture Windows 44
- Transom Windows 52

Specialty Windows 67
Complementary Casement Windows 113

A-SERIES PATIO DOORS

Patio Doors 119
- Gliding Patio Doors 126
- Hinged Inswing Patio Doors 134
- Hinged Outswing Patio Doors 150
- Patio Door Sidelights & Transoms 156

Complementary Curved Top Patio Doors 177

Exterior Trim 189

Combination Designs 196
Product Performance 206
Installation Accessories & Information 226
Sustainability 228

For warranty information, visit **andersenwindows.com/warranty**.

ENERGY STAR AWARD 2022
PARTNER OF THE YEAR
Sustained Excellence

Andersen Corporation, including its subsidiaries, has been named a 2022 ENERGY STAR® Partner of the Year – Sustained Excellence Award winner, the highest honor given by ENERGY STAR, for continued leadership in protecting the environment through superior energy efficiency achievements.

"ENERGY STAR" is a registered trademark of the U.S. Environmental Protection Agency.

AMERICA'S MOST LOVED BRAND OF WINDOWS & DOORS.*

You want to give your customers a home they love, and we're here to make that easy for you. That's why we're proud to offer you products that rate #1 in quality and performance,** and to be the #1 trusted and recommended window and door brand.*

A-SERIES PRODUCTS

Designed in collaboration with architects, A-Series products are our most fine-tuned windows and doors. Their matching sight lines, matching glass setbacks and size options will help you bring any architectural style to life down to the smallest detail. And with numerous glass options and composite exteriors, they're our best performing and most energy-efficient products capable of withstanding the toughest conditions.

*2022 Andersen brand surveys of U.S. realtors, contractors, builders and homeowners.
**2022 Andersen brand surveys of U.S. contractors, builders and architects.

UNPARALLELED INNOVATION & PERFORMANCE

The beauty of A-Series products goes beyond their architecturally detailed designs. They're also the best-performing, most energy-efficient windows and patio doors we've ever engineered. With environmental and impact certifications*, they can help you achieve almost anything.

BUILT STRONG

We use solid wood in interior door panels and window sash and frames plus fiberglass on outer door frames and window sash exteriors to provide an unmatched combination of strength, insulation, versatility and beauty. Additionally, our Fibrex® composite material used in window frames and trim components delivers twice the strength and rigidity of vinyl.

WATER MANAGEMENT THAT WORKS

These features work together to direct water away from buildings:

- Hermetically sealed corner keys keep frames tight
- Sloped sill on double-hung windows
- Sill on patio doors channels water away from the home
- Innovative trim attachment flange secures trim independent of the window or door's water management system

VIRTUALLY MAINTENANCE-FREE EXTERIORS

Exteriors of A-Series products never need painting. They won't flake, rot, blister, peel, pit or corrode.** Plus they're warranted against corrosion for the life of the products† with no washing or waxing required.**

QUALITY SO SOLID, THE WARRANTY IS TRANSFERABLE**†

Our renowned Owner-2-Owner® limited warranty is fully transferable and not prorated, making it one of the best coverage plans available — which means it can add resale value for your customers. It's also supported by the industry's largest service network.

OWNER2OWNER® LIMITED WARRANTY

ARCHITECTURAL AUTHENTICITY

A-Series products and their detailed design options make architectural authenticity not only possible but also easy to achieve. To find A-Series windows, doors, hardware, exterior trim and color palettes that are authentic to a particular home's architectural style, see our style library at **andersenwindows.com/stylelibrary**.

ENERGY-SAVING GLASS AND DESIGN

Andersen makes windows and doors with options that make them ENERGY STAR® v. 6.0 certified throughout the United States.

Visit **andersenwindows.com/energystar** for more information and contact your delaer to verify that the product with your glass option is ENERGY STAR certified in your area.

ASK ABOUT ENERGY STAR

PHIUS CERTIFICATION NEW!

A-Series casement, awning and fixed transom windows are Phius (Passive House Institute US) certified, helping you work your designs toward a zero-carbon footprint.

phius

*Available on select A-Series products.
**Visit andersenwindows.com/warranty for details.
†Hardware excluded.
All logos and marks are trademarks of their respective owners.

RIGOROUSLY TESTED

A-Series products have withstood testing that has taken them from temperatures as cold as Alaskan winters to the heat of Death Valley summers. They've stood up to hurricane-force winds and prolonged exposure to sea air.* A-Series standard products feature the following ratings:†

Windows	PG50 (DP50)
Gliding Patio Doors	PG50 (DP50)**
Hinged Patio Doors	PG45 (DP45)

PG50†
ADH4080 +50/-50
(AAMA/WDMA/CSA 101/I.S.2/A440-11)

Ratings vary by product performance and unit size. See the performance section in this guide for specific unit performance. Visit andersenwindows.com for up-to-date performance values.

SEALS OUT THE WEATHER

Weather-resistant seals stand up to eight inches of rain per hour and hurricane-force winds.* Double-hung windows feature a dual-bulb seal, and casement windows use refrigerator-type gaskets to help keep air and water out.

PERFORMANCE GRADE (PG) UPGRADES NEW!

PG upgrades are now available for A-Series windows, in addition to A-Series patio doors. Products with PG upgrades achieve higher air, water and structural ratings as opposed to standard performance products. Availability is based on product type and size.

PG70††
ADH4080 PGUP +70/-70
(AAMA/WDMA/CSA 101/I.S.2/A440-11)

OPTIONS FOR THE HARSHEST WEATHER

A-Series products are available with Stormwatch® Protection to achieve higher air, water and structural ratings. They also include impact-resistant glass for wind-borne debris protection to maintain the structural integrity of the unit after impact. Visit **andersenwindows.com/coastal** or refer to the Andersen® A-Series Coastal Product Guide for more information. See your local building code official for specific requirements.

PG70‡ **+**
ADH4080 SW Impact +70/-70
(AAMA/WDMA/CSA 101/I.S.2/A440-11)

StormWATCH PROTECTION

*Tested to AAMA/WDMA/CSA 101/I.S.2/A440-08 & -11 PG50.
**Rating applies to all gliding patio doors except two-panel 10' tall doors (PG45) and three- and four-panel 8' and 10' tall doors (PG40).
†ADH4080 +50/-50 (AAMA/WDMA/CSA 101/I.S.2/A440-11). For more information, visit andersenwindows.com/a-series.
††ADH4080 PGUP +70/-70 (AAMA/WDMA/CSA 101/I.S.2/A440-11). For more information, visit andersenwindows.com/a-series.
‡ADH4080 SW Impact +70/-70 (AAMA/WDMA/CSA 101/I.S.2/A440-11). For more information, visit andersenwindows.com/coastal.

ARCHITECTURALLY DETAILED DESIGN

COMMON SIZE GRID

Common sizes in 4" (102) increments are based on the rough opening to simplify framing and specifying. Even-inch sizes eliminate fractions and reduce job site errors. A ¾" (19) gap horizontally and vertically leaves room for shims, insulation and sill flashing.

CUSTOM SIZING

All A-Series windows and patio doors can be ordered in ⅛" (3) increments, providing flexibility for replacement, remodeling, new construction and light commercial projects.

COMMON GLASS SETBACK

A common glass setback on A-Series windows and patio doors delivers noticeably clean shadow lines both inside and out.

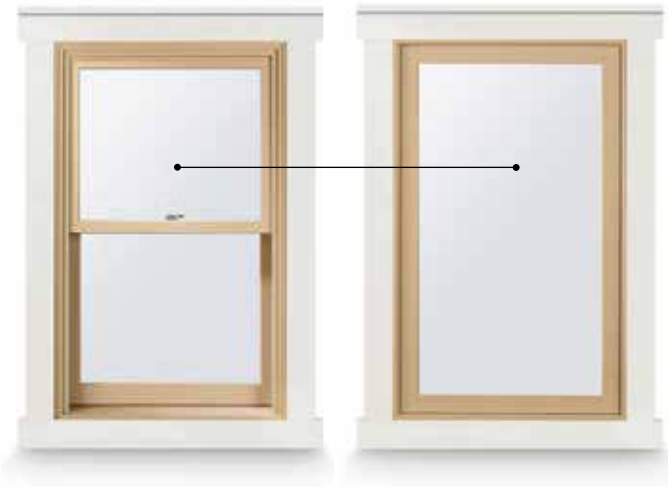

The upper sash of double-hung windows aligns perfectly with casement windows, awning windows, picture windows, patio doors and transoms.

Dimensions in parentheses are in millimeters.

COMPLETE ALIGNMENT

Common sight lines allow you to specify any combination of window styles and still have them match and align perfectly.

Windows share the same sash design, grille profiles and frame depth for consistent beauty with classic appeal.

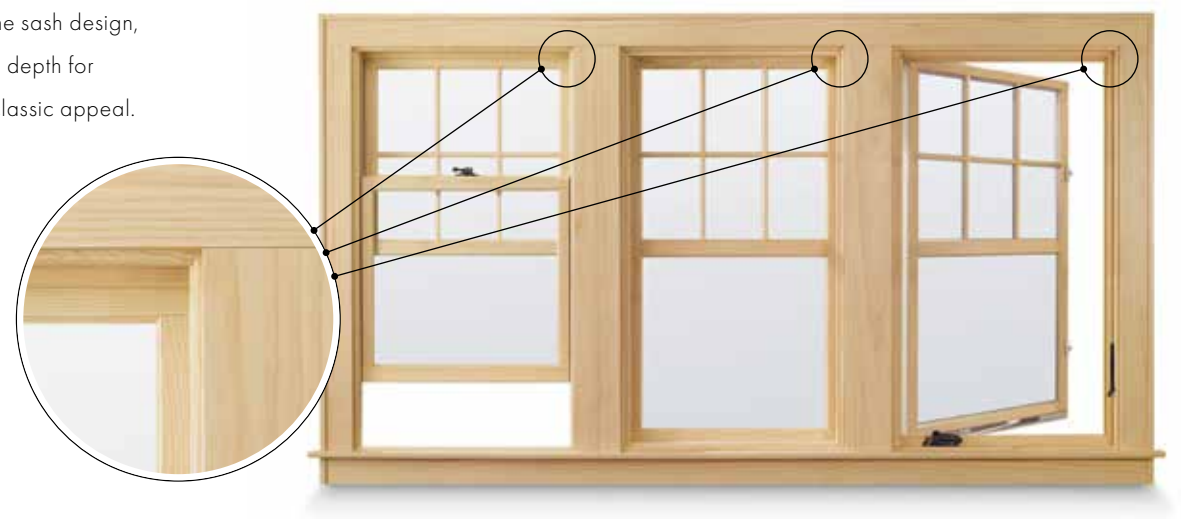

EASY MATH

The A-Series window system simplifies selection and installation of multiple windows within a single rough opening. ¾" (19) horizontal and vertical joins keep sizing consistent no matter how many or what size windows you combine.

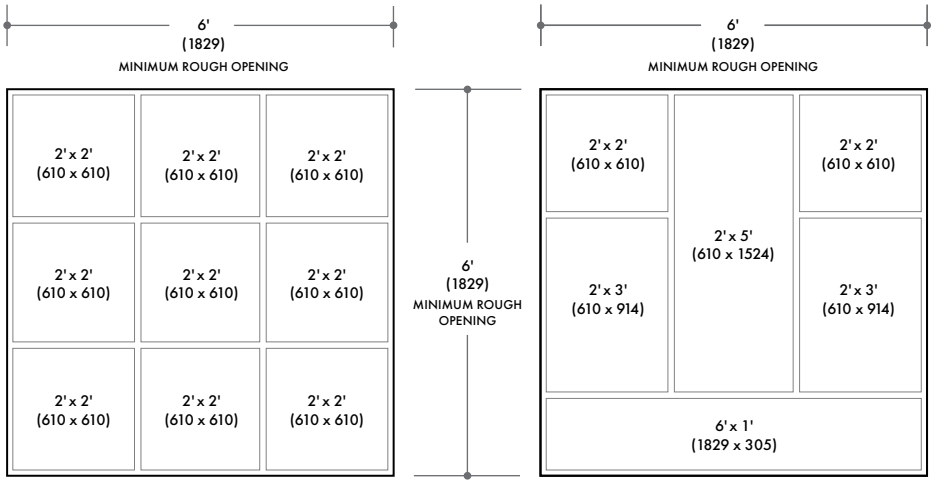

The spacing in these illustrations is exaggerated for demonstration purposes.

Dimensions in parentheses are in millimeters.

ANDERSEN® PRODUCTS

RATE #1 IN QUALITY AND PERFORMANCE.*

*2022 Andersen brand surveys of U.S. contractors, builders and architects.

WINDOW & DOOR TYPES

A-SERIES WINDOWS

The A-Series window lineup consists of casement, awning, double-hung, picture, transom (fixed or venting) and specialty shape windows. Every type is meticulously designed to fit a variety of different architectural styles. And with common sight lines they're designed to align perfectly no matter how you combine them.

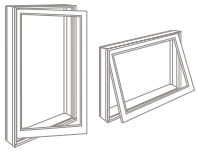

Casement/Awning

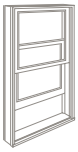

Double-Hung

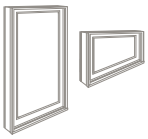

Picture & Transom

Specialty

A-SERIES PATIO DOORS

The A-Series door lineup consists of gliding and hinged patio doors (inswing and outswing) with options to add sidelights and transoms for an even stronger connection to the outdoors.

Contemporary Panels NEW!

The new A-Series contemporary panels have a 6 ¼" (159) bottom rail as opposed to traditional panels with a 10 ½" (267) bottom rail. Matching patio door sidelights and transoms are available.

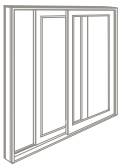

Gliding

Hinged

Patio Door Sidelights & Transoms

COMPLEMENTARY CASEMENT WINDOWS

Our complementary casement windows offer easy operation along with old-world style. They include French casements — twin sash inside one frame with no mullion post between them like ordinary casements — that give you a totally unobstructed view. Complementary casement windows are available in rectangles, trapezoids and a variety of arched shapes.

COMPLEMENTARY CURVED TOP PATIO DOORS

With features like Romanesque arches and sweeping curves, nothing else quite matches the grandeur our complementary curved top inswing and outswing patio doors can bring to a home.

Dimensions in parentheses are in millimeters.

EXTERIORS

A-Series products are available in a wide range of exterior colors and exterior trim choices. Even in harsh conditions they're virtually maintenance free, hold their original vibrant colors, never need painting and won't flake, rot, blister, peel, pit or corrode.* Select any combination of colors shown here for your exterior frame, sash and trim.

EXTERIOR COLORS

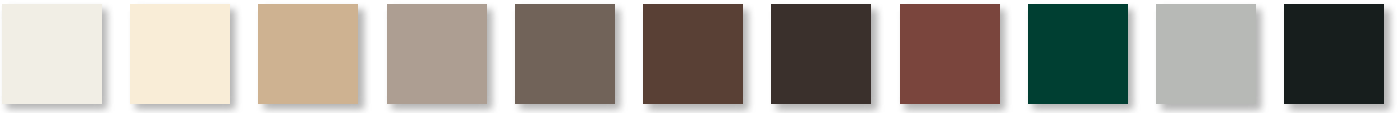

White | Canvas | Prairie Grass | Sandtone | Terratone | Cocoa Bean | Dark Bronze | Red Rock | Forest Green | Dove Gray | Black

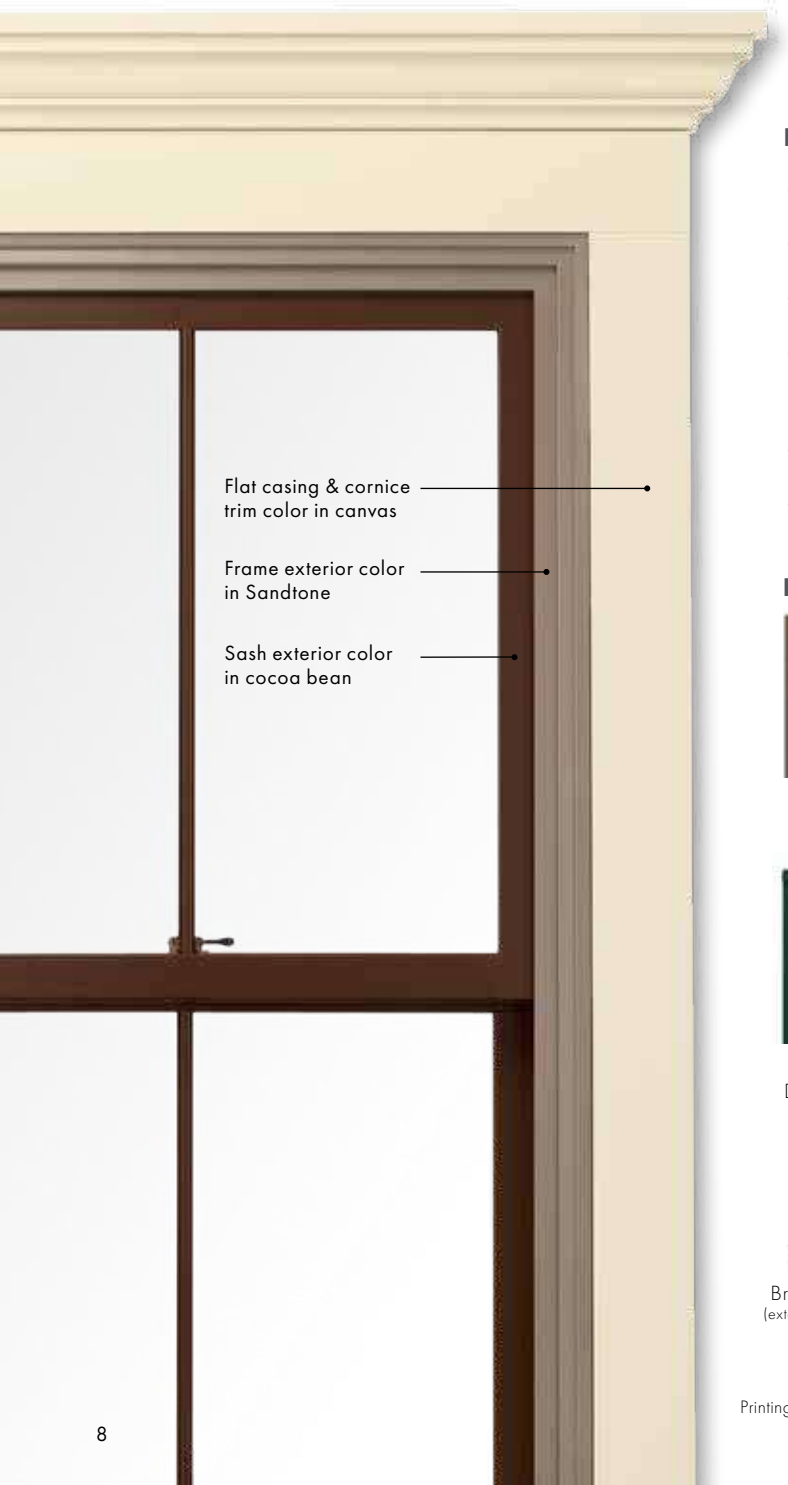

EXTERIOR TRIM SYSTEM

- Complements a wide range of architectural styles
- Low maintenance and never needs painting
- Order as pre-assembled surrounds, in precut kits or as individual components
- Innovative trim attachment flange on A-Series windows allows pre-assembled exterior trim surrounds to be installed in seconds
- Installed independent of the window's or door's water management system
- For more information, see the exterior trim section starting on page 191.

EXTERIOR TRIM STYLE OPTIONS

Flat Casing
(flush head)

Flat Casing
(extended head)

Brick Mould

Flat Casing &
Decorative Drip Cap

Flat Casing & Cornice

Flat Casing & Cornice

Brick Mould & Sill Nose
(extended sill nose, also available with flush sill nose)

Flat Casing
(flush sill)

Flat Casing
(extended sill)

*Visit andersenwindows.com/warranty for details.
Printing limitations prevent exact duplication of colors. See your Andersen supplier for actual color samples.

INTERIORS

With six natural wood species, six rich factory-finished stain options and a variety of painted interiors, A-Series products provide the flexibility to create interiors that please both you and your customers.

INTERIOR WOOD SPECIES

Pine | Maple | Vertical Grain Douglas Fir | Oak | Mahogany* | Cherry

FACTORY-FINISHED INTERIORS

Clear Coat | Honey | Cinnamon | Mocha | Russet | Espresso

All wood interiors are unfinished unless a finish is specified. For windows, clear coat is now available on all wood species; all other factory finishes are available on pine, maple and oak. For doors, factory finishes are available on pine, maple and oak. Finishes shown above on pine. NEW!

INTERIOR PAINT COLORS

White | Birch Bark | Primed (for paint) | Canvas | Sandtone | Dark Bronze | Black

For windows, painted interiors are now available on maple in addition to pine. For doors, painted interiors are available on pine. Additional colors to match all 11 exterior colors are also available; see your Andersen supplier for details. NEW!

4-TONE INTERIORS NEW!

Mix and match up to four interior wood species, stains and/or colors for your window's frame, sash, grilles and extension jambs to achieve a look unique to your project.

*Actual wood species is either Sapele or Sipo, both non-endangered species grown in Africa, with color and characteristics similar to Central American mahoganies.

Naturally occurring variations in grain, color and texture of wood make each window one of a kind. We cannot guarantee consistency in wood grain and/or color within a particular species, product or project.

Printing limitations prevent exact duplication of colors. See your Andersen supplier for actual color samples.

ANDERSEN® IS THE WINDOW & DOOR BRAND

HOMEOWNERS RECOGNIZE THE MOST.*

*2022 Andersen brand survey of U.S. homeowners.

WINDOW HARDWARE

The hardware* for our A-Series windows is created exclusively for Andersen and is made of forged metal for added strength. A range of available finishes makes it easy for customers to coordinate their window hardware with their cabinet hardware, faucets and other room décor.

Casement, Awning & Venting Transom

CONTEMPORARY FOLDING

Black | Bright Brass | Oil Rubbed Bronze
Satin Nickel | Stone | White

TRADITIONAL FOLDING

Antique Brass | Black | Bright Brass | Distressed Bronze
Distressed Nickel | Oil Rubbed Bronze | Satin Nickel
Stone | White

Folding handles avoid interference with window treatments.
Bold name denotes finish shown.

Double-Hung

Lock & Keeper

Antique Brass | Black | Bright Brass | Distressed Bronze | Distressed Nickel
Oil Rubbed Bronze | **Satin Nickel** | Stone | White

Optional Bar Lift

Optional Hand Lift

Optional Finger Lift

Antique Brass | Black | Bright Brass | Distressed Bronze | Distressed Nickel
Oil Rubbed Bronze | **Satin Nickel** | Stone | White

Bold name denotes finish shown.

HARDWARE FINISHES

Antique Brass | Black | Bright Brass | Distressed Bronze | Distressed Nickel | Oil Rubbed Bronze | Satin Nickel | Stone | White

EASY TILT-TO-CLEAN

A-Series double-hung windows include a tilt-to-clean feature, with one hand operation, for easy exterior glass cleaning of both sash.

*Hardware sold separately except double-hung lock and keeper.
Distressed bronze and oil rubbed bronze are "living" finishes that will change with time and use.
Printing limitations prevent exact replication of finishes.
See your Andersen supplier for actual finish samples.

PATIO DOOR HARDWARE

Patio door hardware* is available in a variety of designs to match virtually any style. Yuma,® Encino,® Newbury® and Anvers® hardware options each feature solid drop-forged brass for added strength, while Albany and Tribeca® hardware options are made of zinc die-cast with durable powder-coated finishes. Additional hardware options such as exterior keyed locks, matching hinge finishes and more are also available.

Bold name denotes finish shown.

HARDWARE FINISHES

Antique Brass | Black | Bright Brass | Distressed Bronze | Distressed Nickel | Oil Rubbed Bronze | Satin Nickel | Stone | White

*Hardware sold separately.
Bright brass and satin nickel finishes on patio door hardware feature a 10-year limited warranty.

Matching hinges available in most finishes for inswing patio doors.
Distressed bronze and oil rubbed bronze are "living" finishes that will change with time and use.
Printing limitations prevent exact replication of finishes. See your Andersen supplier for actual finish samples.

FSB® HARDWARE FOR HINGED PATIO DOORS

Durable FSB hinged door hardware* features clean lines and a sleek satin finish for a thoroughly modern look. Choose from four styles.

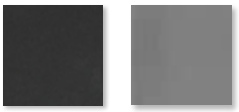

Black Anodized Aluminum | Satin Stainless Steel

1035 | 1075 | 1076 | 1102**

YALE® ASSURE LOCK® FOR HINGED PATIO DOORS†

The sleek key-free lock* includes Bluetooth® technology for keyless unlocking. Available with Anvers® hardware* in black, satin nickel and white. Compatible with touchscreen, touchscreen + Z-Wave® and touchscreen + Bluetooth + WiFi® kit.

One-Touch Locking – Lock up without the hassle of keys by simply tapping the keypad.
Key Free – No cylinder means no lost keys, and no pick and bump break-ins.
Battery Backup – Never lose power; the lock can be energized with a 9V battery.
Remote Access – Monitor, lock and unlock from anywhere.††

Black | Satin Nickel | White

FLUSH HARDWARE FOR GLIDING PATIO DOORS NEW!

Sleek, low profile hardware* for gliding patio doors is available in keyed and non-keyed options for both traditional and contemporary door panels. Shown in satin nickel.

Black | Oil Rubbed Bronze

Satin Nickel | White

*Hardware sold separately.
**FSB style 1102 is not available in black anodized aluminum.
†Available on select Andersen® hinged patio doors; see your Andersen supplier for details.

††When properly configured and maintained with a professionally installed security system and/or self-monitoring system compatible with Honeywell® 5800 controls. See your Andersen supplier for more information.
Distressed bronze and oil rubbed bronze are "living" finishes that will change with time and use.
Printing limitations prevent exact replication of finishes. See your Andersen supplier for actual finish samples.
All marks are trademarks of their respective owners.

GLASS

Choose from a variety of high-performance glass options, including triple-pane glass and HeatLock® technology for even greater energy efficiency.

Low-E4® SmartSun™ Glass

Helps shield your home from the sun's heat, filtering out 95% of harmful UV rays while letting sunlight shine through, plus it provides all the benefits of Low-E4 glass.

Low-E4 Glass

Outstanding thermal performance for climates where both heating and cooling costs are a concern. It comes standard on all A-Series products and is up to 57% more energy efficient than ordinary dual-pane glass.*

Low-E4 Sun Glass

Outstanding thermal performance in southern climates where less solar heat gain is desired. It's tinted for maximum protection from the effects of intense sunlight while providing all the benefits of Low-E4 glass.

Triple-Pane Glass

Three panes of glass are combined with either argon gas blend or air and Low-E coatings to provide enhanced energy performance. Adding triple-pane glass to one of our windows or doors results in a lower U-Factor value than using regular dual-pane glass.

HeatLock Technology

Our HeatLock coating can increase the energy efficiency of any A-Series window or door with Low-E4 or SmartSun glass. Applied to the room-side glass surface, it reflects heat back into the home for improved performance.

	ENERGY		LIGHT	
GLASS	**U-Factor** How well a product prevents heat from escaping.	**Solar Heat Gain Coefficient** How well a product blocks heat caused by sunlight.	**Visible Light Transmittance** How much visible light comes through a product.	**UV Protection** How well a product blocks ultraviolet rays.
SmartSun	●●●○	●●●●	●●◐○	●●●●
SmartSun with HeatLock Coating	●●●◐	●●●●	●●○○	●●●●
Low-E4	●●●○	●●●○	●●●○	●●●○
Low-E4 with HeatLock Coating	●●●◐	●●●○	●●◐○	●●●○
Sun	●●●○	●●●●	●○○○	●●●○
PassiveSun®	●●◐○	●○○○	●●●○	●●◐○
PassiveSun with HeatLock Coating	●●●○	●○○○	●●◐○	●●◐○
Triple-Pane with Low-E Coating on two surfaces	●●●●	●●●○	●●○○	●●●●
Clear Dual-Pane	●○○○	○○○○	●●●●	○○○○

Center of glass performance only. Ratings based on glass options as of August 2022. Visit andersenwindows.com/energystar for ENERGY STAR® map and NFRC total unit performance data or contact your Andersen supplier for product specific performance data.

*Summer values are based on comparison of Andersen® A-Series double-hung window SHGC to the SHGC for clear dual-pane glass non-metal frame default values from the 2006, 2009, 2012, 2015 and 2018 International Energy Conservation Code "Glazed Fenestration" Default Tables.

See your Andersen supplier for actual glass samples.

"ENERGY STAR" is a registered trademark of he U.S. Environmental Protection Agency.

STORMWATCH® PROTECTION

A-Series products are available with impact-resistant glass in addition to structural upgrades to meet the tough building codes of hurricane-prone coastal areas. See your local code official for specific requirements.

ADDITIONAL GLASS OPTIONS

Tempered safety glass is standard on patio doors and required by code for larger window sizes.*

Laminated glass is available for added strength, enhanced security and sound control.

Patterned glass lets in light while obscuring vision and adds a unique, decorative touch. Cascade and Reed patterns can be ordered with either a vertical or horizontal orientation.

Cascade

Fern

Obscure

Reed

Satin Etch

TIME-SAVING FILM

We protect our products during delivery and construction with translucent film on the glass that peels away for a virtually spotless window.

Visit **andersenwindows.com/glass** for more details on our glass options.

GLASS SPACER OPTIONS

Black or white glass spacers are available as a standard offering on A-Series products, in addition to stainless steel glass spacers, to provide more ways to customize project designs and achieve a contemporary style. Colored glass spacers blend in with the color of the window or door for a sleek design, or serve as a shadow line.

Add full divided light grilles, and the grille spacer bar between the glass will match the selected glass spacer color.

Black

White

Stainless Steel

BETWEEN-THE-GLASS ART GLASS

With our between-the-glass art glass you can add interest, create focal points and make your work stand out. See page 16 or visit **andersenwindows.com/artglass** for more information.

BLINDS-BETWEEN-THE-GLASS FOR PATIO DOORS

Conveniently located between the panes of insulated glass, and protected from dust and damage for long-lasting protection, blinds-between-the-glass are available on select sizes of A-Series patio doors. The cordless design easily raises, lowers or tilts the blinds for control of light and privacy. Available in slate gray or white, and can be ordered with any interior or exterior door finish. Blinds are covered by a 10-year limited warranty.**

*See your local code official for code requirements in your area.
**Visit andersenwindows.com for warranty details.
Printing limitations prevent exact color duplication. See your Andersen supplier for details.
"ENERGY STAR" is a registered trademark of the U.S. Environmental Protection Agency.

BETWEEN-THE-GLASS ART GLASS

A-Series between-the-glass art glass places the decorative panel between the glass panes, providing superior protection for the art glass and making it easy to keep clean. Historic patterns and Classic Series designs, representing major architectural themes from the late 1800s through the 1930s, are available in standard color palettes or custom color combinations.*

HISTORIC

Diamond Grid

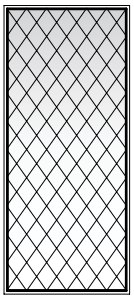

Queen Anne

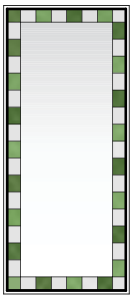

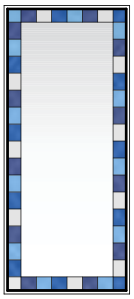

Olive green, clear waterglass, moss green and clear

Pale blue, navy blue, clear waterglass, dark blue and clear

Arts & Crafts

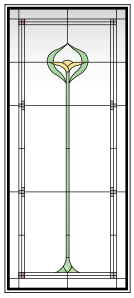

Olive green, pale amber, clear waterglass, avocado glimmer and tangerine glimmer

Rectangular Grid

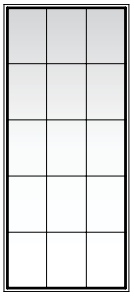

Amber

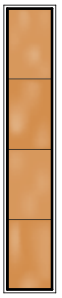

CLASSIC SERIES**

Lotus

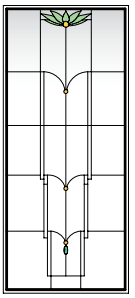

Light green with amber and green jewels

Sand with pink jewels

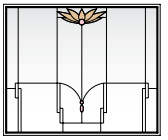

Regency

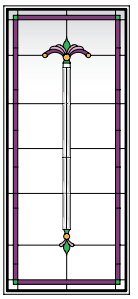

Deep rose, deep green and rose with opal amber jewels

Sand, deep teal, topaz and copper with smoke jewels

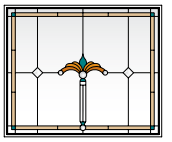

Victoria

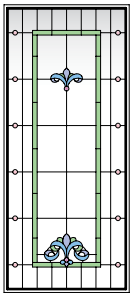

Light green, lilac and light blue with pink and lilac jewels

Violet, deep rose and deep green with amber jewels

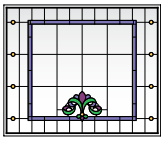

Diamond Lights

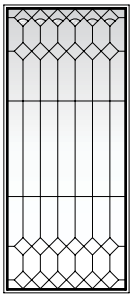

Clear fan-shaped bevels

ART GLASS COLORS

Amber, Copper, Dark Blue, Deep Green, Deep Rose, Deep Teal, Golden Green, Kelly Green, Light Blue, Light Green, Lilac

Moss Green, Navy Blue, Olive Green, Pale Amber, Pale Blue, Rose, Sand, Topaz, Umber, Violet

Iridescent Accents

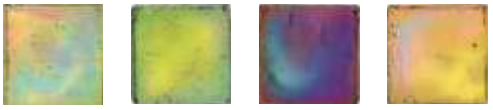

Avocado Glimmer, Kiwi Glimmer, Tamarind Glimmer, Tangerine Glimmer

Jewel Accents

Amber, Clear, Green, Lilac, Opal Amber, Pink, Smoke

Clear, clear antique, clear waterglass, along with textured semi-privacy (double glue chip) and light restoration glass are also available.
For custom capabilities, contact your Andersen supplier.

*Color palettes and jewel accents for custom combinations are predetermined by style of art glass. For custom capabilities, see your Andersen supplier.
**Classic Series patterns are also available with semi-privacy glass or clear antique glass in place of colored glass. Additional color palettes are available.
Patterns vary based on window or panel size and shape. Illustrations (except Amber) depict patterns for 6068 patio door panel. See your Andersen supplier for pattern availability.
Art glass changes appearance greatly based on lighting in its environment, making it beautiful to look at yet difficult to represent accurately in print. Printing limitations prevent exact color duplication. Colors in the Historic patterns and Classic Series designs may also vary. See your Andersen supplier for actual color samples.

INSECT SCREENS

Our TruScene® insect screens provide more than 50% greater clarity than our conventional insect screens for a beautifully unobstructed view. They let in 25% more fresh air;* all while keeping out unwanted small insects.

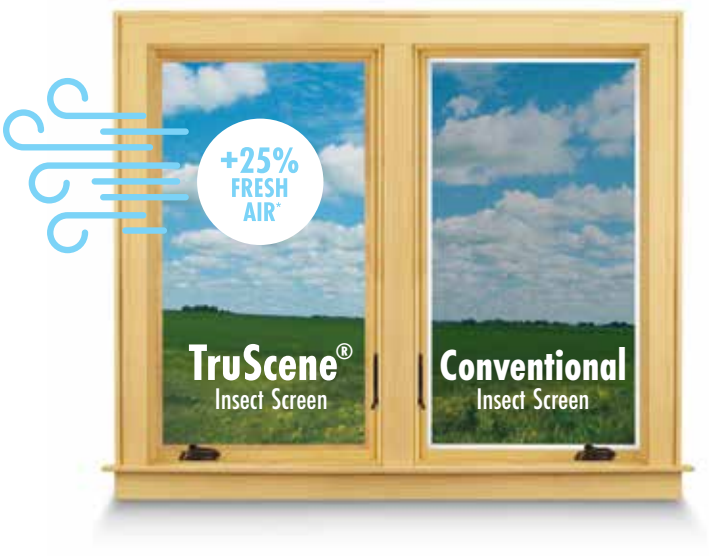

TRUSCENE INSECT SCREENS

TruScene insect screens are available for all venting windows. Insect screen frames for casement, awning and venting transom windows are available in white, gold dust and stone as well as prefinished in six wood veneers, six stains and all interior paint colors. Frames for double-hung windows match the product's exterior color.

Interior TruScene insect screen with a pine frame and clear coat finish.

CONVENTIONAL INSECT SCREENS

Conventional insect screens are available for venting windows and doors. Insect screen frames for casement, awning and venting transom window are available in interior paint options, as well as gold dust and stone. Frames for outswing patio doors are available in white, gold dust, pine, maple and oak finishes and in six stain options to match the door's interior. Frames for gliding and inswing patio doors and double-hung windows match the product's exterior color.

White Gold Dust Stone

Interior conventional insect screen frames for casement, awning and venting transom windows shown in three of the color options.

INSECT SCREEN CONFIGURATIONS

Windows

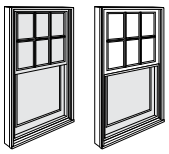

Full insect screen for venting windows. **Half insect screen** for the lower sash of double-hung windows.

Gliding Patio Doors

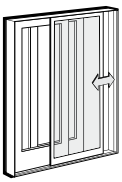

Premium top-hung or conventional **gliding insect screen** for two- and four-panel gliding doors.

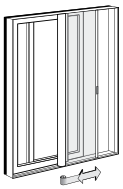

Retractable insect screen for two-panel gliding doors. Installed on the exterior, it neatly retracts into a small canister.

Hinged Patio Doors

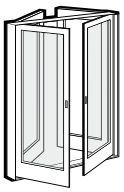

Single- or double-hinged insect screen for inswing single- and two-panel doors.

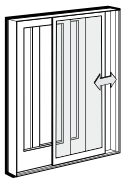

Premium top-hung or conventional **gliding insect screen** for two- and three-panel inswing doors.

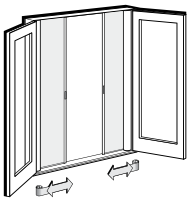

Retractable insect screen for two-panel outswing doors. Installed on the interior, it neatly retracts into a small canister.

*TruScene insect screens let in over 25% more fresh air than standard Andersen fiberglass insect screens.

REALTORS AGREE THAT ANDERSEN® PRODUCTS

INCREASE THE VALUE OF A HOME BY AT LEAST 15%.*

*2022 Andersen brand survey of U.S. realtors and their experience for the homes they sell.

GRILLES

A-Series windows and patio doors offer a variety of architecturally authentic grille types and standard patterns. We'll also work with you to provide your customers with custom grille designs for a signature look.

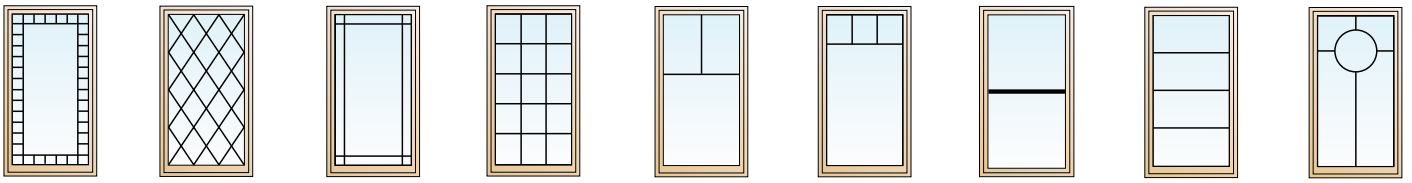

Queen Anne | Diamond | Prairie A | Colonial | Tall Fractional | Short Fractional | Simulated Meeting Rail* | 1x4 Specified Equal Light** | Custom

FULL DIVIDED LIGHT

Permanently applied to the interior and exterior of the window, with a spacer between the glass.

Full Divided Light with Energy Spacer

Full divided light with a narrow spacer bar that provides a 3 mm gap around the spacer to minimize transfer of heat and cold to the interior glass surface, improving overall thermal performance.

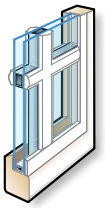

Permanent exterior and permanent interior with spacer

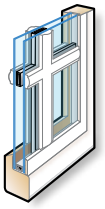

Permanent exterior and permanent interior with energy spacer

SIMULATED DIVIDED LIGHT

Permanent grilles on the exterior and interior, with no spacer between the glass. We also offer permanent exterior grilles with removable interior grilles available in natural wood or prefinished white.

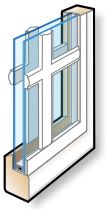

Permanent exterior and permanent interior

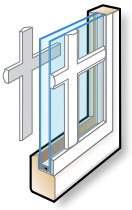

Permanent exterior and removable interior

CONVENIENT CLEANING

Removable interior grilles come off for easy cleaning. Finelight™ grilles-between-the-glass are installed between the glass panes, and feature a contoured 1" (25) or ¾" (19) profile.

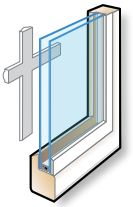

Removable interior

Finelight grilles-between-the-glass†

GRILLE BAR WIDTHS

Traditional

¾" (19) | ⅞" (22) | 1⅛" (29) | 2¼" (57)

Contemporary for Patio Doors NEW!

⅝" (16) | ¾" (19) | 2¼" (57) | 3½" (89)

Wide traditional grilles can be positioned horizontally across the center of a casement window to simulate the look of a double-hung window.*
New contemporary grilles can be used for door products with contemporary options. Actual size shown.

*Simulated meeting rails are available in ⅞" (22), 1⅛" (29) and 2¼" (57) widths.
**Specify number of same-size rectangles wide or high. Some restrictions may apply.
† ⅞" (22), 1⅛" (29), 2¼" (57) and 3½" (89) widths are not available in Finelight grilles-between-the-glass.

For standard grille patterns, refer to the detailed product sections in this guide or contact your Andersen supplier.
Some grille patterns are not available in all configurations or products.
Dimensions in parentheses are in millimeters.

EASY CONNECT JOINING SYSTEM

Our Easy Connect Joining System* provides enhanced performance, design flexibility, and job site conveniences. Choose from three options — partially assembled factory-prepped combinations, fully assembled factory-joined combinations or on-site joining kits — to achieve monumental window combinations. These joining options utilize the strength and durability of fiberglass construction, and offer the design flexibility of achieving both one-way and two-way combinations. Visit **andersenwindows.com/joining** for more information.

Innovative patented joining system utilizes 5 3/4" (146) interlocking fiberglass joining plates for 4 9/16" (116) base jamb depths. 7 3/4" (197) interlocking fiberglass joining plates are available for higher performance and are required for hinged inswing patio doors with 6 9/16" (167) base jamb depths. They are available in 14' (4267) lengths, and are field cut and applied.

Factory-Prepped Combinations

Receive lighter, easier-to-handle, pre-assembled smaller combinations that join as you install them into the rough opening, making it easier to install large combinations. In fact, most contractors surveyed said they could reduce the number of installers by 50% using the Andersen® Easy Connect Joining System.**

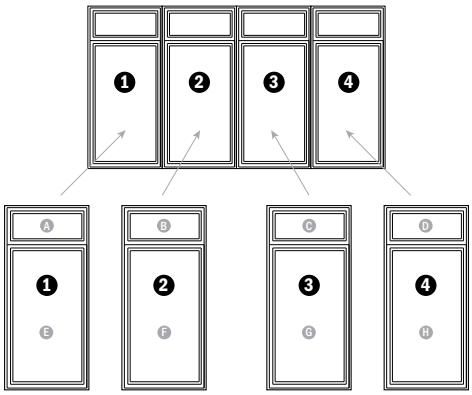

Factory-Joined Combinations

Eliminate the need for job site assembly and receive fully joined, factory-assembled window combinations to fit rough openings up to 12' (3658) x 8' (2438) or 8' (2438) x 12' (3658).

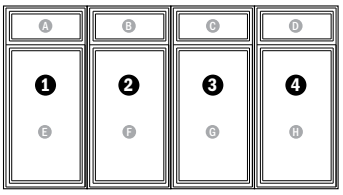

	ASSEMBLY	READY TO INSTALL	NUMBER OF INSTALLERS**	HALLMARK CERTIFIED†	TESTED TO AAMA 450	PERFORMANCE	COMBINATION SIZE LIMITATIONS
FACTORY-PREPPED COMBINATIONS	IN THE OPENING	●	FEWER	●	●	Extensive unit combination size options available certified to PG70† High Velocity Hurricane Zone (HVHZ) approved	ROUGH OPENING MAX: 12' (3658)in one direction with no maximum in the other direction
FACTORY-JOINED COMBINATIONS	FACTORY	●	MORE	●	●	Extensive unit combination size options available certified to PG70† High Velocity Hurricane Zone (HVHZ) approved	ROUGH OPENING MAX: 12' x 8' or 8' x 12' (3658 x 2438 or 2438 x 3658)
JOINING KITS	JOB SITE		MORE	●	●	Extensive unit combination size options available certified to PG70† High Velocity Hurricane Zone (HVHZ) approved	ROUGH OPENING MAX: 12' (3658)in one direction with no maximum in the other direction

*Available on select windows, see your Andersen supplier for details.
**69% of 156 builders/general contractors in a 2018 survey said they could reduce the number of installers by half using the Easy Connect Joining System when comparing the installation of a 12' (3658) wide x 8' (2438) high pre-assembled window combination unit with four 3' (914) wide x 8' (2438) high window combination units.

†Easy Connect and other fiberglass joins are certified up to PG70 when installed according to Andersen installation instructions.
Structural performance of any combination is only as high as the lowest structural performance of any individual unit or joining material in the combination.
Dimensions in parentheses are in millimeters.

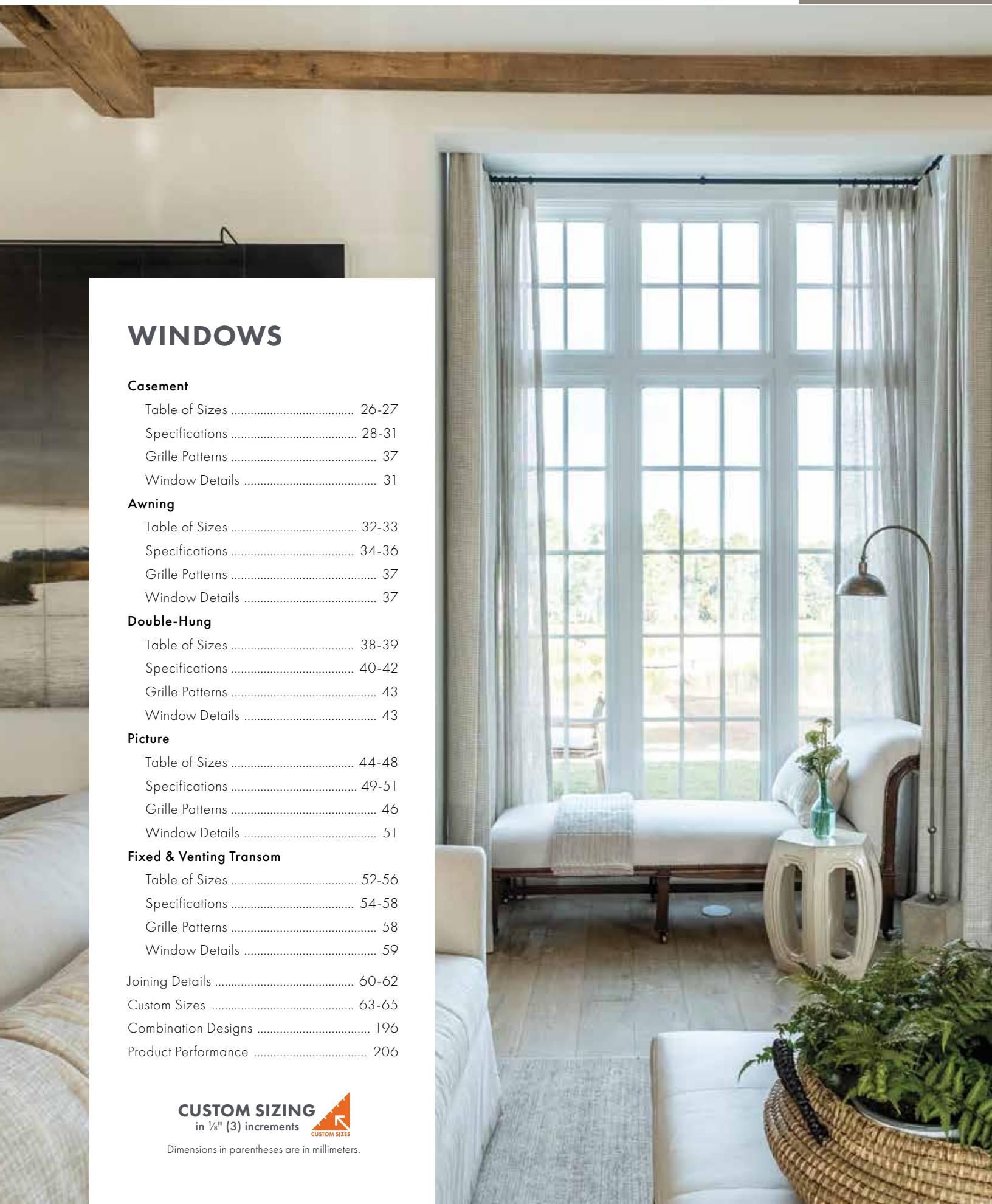

WINDOWS

Casement
- Table of Sizes 26-27
- Specifications 28-31
- Grille Patterns 37
- Window Details 31

Awning
- Table of Sizes 32-33
- Specifications 34-36
- Grille Patterns 37
- Window Details 37

Double-Hung
- Table of Sizes 38-39
- Specifications 40-42
- Grille Patterns 43
- Window Details 43

Picture
- Table of Sizes 44-48
- Specifications 49-51
- Grille Patterns 46
- Window Details 51

Fixed & Venting Transom
- Table of Sizes 52-56
- Specifications 54-58
- Grille Patterns 58
- Window Details 59

Joining Details 60-62
Custom Sizes 63-65
Combination Designs 196
Product Performance 206

CUSTOM SIZING
in ⅛" (3) increments
CUSTOM SIZES

Dimensions in parentheses are in millimeters.

FEATURES

CASEMENT & AWNING

FRAME

A The frame is constructed with wood and Fibrex® composite material exterior. This construction produces a rigid frame and a low-maintenance, durable exterior.

B Wood members are treated with a water-repellent preservative for long-lasting* protection and performance.

C The weatherstrip system combines an exterior watershed design and a foam weatherstrip seal between the sash and frame, providing a long-lasting,* energy-efficient barrier against wind, water and dust.

D A factory-applied rigid vinyl installation flange helps seal the unit to the structure. Available in a standard design or with an exterior trim installation flange (shown). The exterior trim installation flange allows for Andersen® exterior trim surrounds to be applied in seconds after window installation.

SASH

E Fiberglass construction provides durable, strong and long-lasting* performance. The Fiberglass is finished with a Flexacron® paint system. This stabilized polyester paint is electrostatically applied for maximum protection and a lustrous, low-maintenance finish.

Traditional architectural style:

- Classic chamfer detailing
- The look of mortise-and-tenon joinery
- A tall bottom rail on casement and awning windows aligns with double-hung and picture windows for common sight lines

F Natural wood interiors are treated with a water-repellent preservative for long-lasting* protection and performance. Interior stops are fastened using a compression fit system so there are no nail holes to fill.

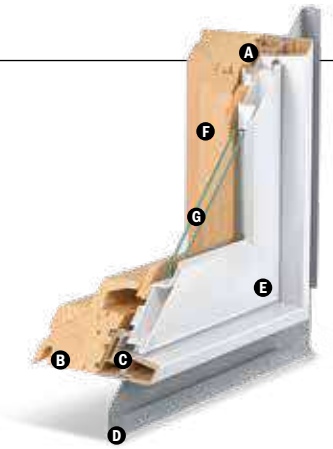

G GLASS

See Common Features on page 23 for details.

HARDWARE

Smooth Control Hardware System

Smooth operation is provided by a worm gear drive design that makes opening and closing almost effortless, regardless of the unit size. Hinges allow for a wash mode or widest clear opening depending on the window size. Hardware is sold separately. Hardware option and finish must be specified.

Single-Action Casement Lock

A single-action lock easily releases all locking points on the casement sash, while the reach-out action eliminates binding when closing. The lock is offered in finishes that coordinate with your specified hardware option.

Awning Sash Locks

Awning windows feature dual sash locks. Hardware style and finish options are compatible with casement windows to ensure consistency in appearance when used in combination designs.

PERFORMANCE OPTIONS

See Common Features on page 23 for details.

DOUBLE-HUNG

FRAME

A The frame is constructed with wood and Fibrex composite material exterior. This construction produces a rigid frame and a low-maintenance, durable exterior.

B Wood members are treated with a water-repellent preservative for long-lasting* protection and performance.

C The dual weatherstrip system utilizes a double foam-filled design that creates a pressure equalization chamber, knocking down driving rain and delivering a long-lasting,* energy-efficient barrier against wind, water and dust.

D Traditional sloped sill design.

E For units with a white exterior, the exterior jamb liner is white. For all other exterior colors, the exterior jamb liner is Sandtone. All double-hung windows include lower jamb liner cover/inserts that match the product's exterior color.

F A factory-applied rigid vinyl installation flange helps seal the unit to the structure. Available in a standard design or with an exterior trim installation flange (shown). The exterior trim installation flange allows for Andersen exterior trim surrounds to be applied in seconds after window installation.

SASH

G Fiberglass construction provides durable, strong and long-lasting* performance. The Fiberglass is finished with a Flexacron paint system. This stabilized polyester paint is electrostatically applied for maximum protection and a lustrous, low-maintenance finish.

Traditional architectural style:

- Classic chamfer detailing
- The look of mortise-and-tenon joinery
- A tall bottom rail on double-hung windows aligns with casement, awning and picture windows for common sight lines

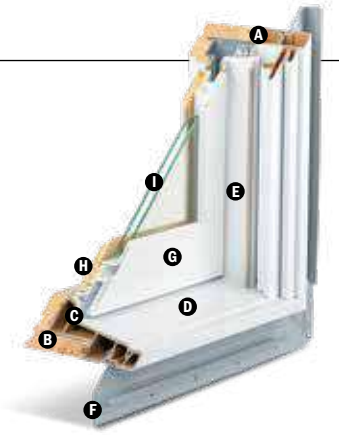

H Natural wood interiors are treated with a water-repellent preservative for long-lasting* protection and performance. Interior stops are fastened from behind so there are no nail holes to fill.

I GLASS

See Common Features on page 23 for details.

HARDWARE

Sash Lock

Traditional spoon lock design has an integrated tilt-to-clean feature, so both sash can be cleaned from the inside.

PERFORMANCE OPTIONS

See Common Features on page 23 for details.

SASH OPTIONS**

Cottage Style

Reverse Cottage Style

*Visit andersenwindows.com/warranty for details.
**Shown on 400 Series tilt-wash double-hung full-frame windows.
"Flexacron" is a registered trademark of PPG Industries, Inc.

PICTURE WINDOW & FIXED TRANSOM

FRAME

The frame is constructed with wood and fiberglass exterior. This construction produces a rigid frame and a low-maintenance, durable exterior.

Wood members are treated with a water-repellent preservative for long-lasting* protection and performance.

A factory-applied rigid vinyl installation flange helps seal the unit to the structure. Available in a standard design or with an exterior trim installation flange. The exterior trim installation flange allows for Andersen® exterior trim surrounds to be applied in seconds after window installation.

Fiberglass construction provides durable, strong and long-lasting* performance. The fiberglass is finished with a Flexacron® paint system. This stabilized polyester paint is electrostatically applied for maximum protection and a lustrous, low-maintenance finish.

Traditional architectural style:

- Classic chamfer detailing
- The look of mortise-and-tenon joinery
- A tall bottom rail on picture windows aligns with casement, awning and double-hung windows for common sight lines
- A shorter bottom rail on fixed transom windows provides an attractive sight line when joined above other A-Series windows or patio doors

Natural wood interiors are treated with a water-repellent preservative for long-lasting* protection and performance. Interior stops are fastened using a compression fit system so there are no nail holes to fill.

GLASS

See Common Features below.

PERFORMANCE OPTIONS

See Common Features below.

VENTING TRANSOM

FRAME

The frame is constructed with wood and Fibrex® composite material exterior. This construction produces a rigid frame and a low-maintenance, durable exterior.

Wood members are treated with a water-repellent preservative for long-lasting* protection and performance.

The weatherstrip system combines an exterior watershed design and a foam weatherstrip seal between the sash and frame, providing a long-lasting,* energy-efficient barrier against wind, water and dust.

A factory-applied rigid vinyl installation flange helps seal the unit to the structure. Available in a standard design or with an exterior trim installation flange. The exterior trim installation flange allows for Andersen exterior trim surrounds to be applied in seconds after window installation.

SASH

Fiberglass construction provides durable, strong and long-lasting* performance. The fiberglass is finished with a Flexacron paint system. This stabilized polyester paint is electrostatically applied for maximum protection and a lustrous, low-maintenance finish.

Traditional architectural style:

- Classic chamfer detailing
- The look of mortise-and-tenon joinery
- A shorter bottom rail provides an attractive sight line when joined above other A-Series windows or patio doors

Natural wood interiors are treated with a water-repellent preservative for long-lasting* protection and performance. Interior stops are fastened using a compression fit system so there are no nail holes to fill.

GLASS

See Common Features below.

HARDWARE

Smooth operation is provided by a worm gear drive design that makes opening and closing almost effortless, regardless of the unit size.

Sash Locks

Venting transoms feature dual sash locks. Hardware style and finish options are compatible with casement windows to ensure consistency in appearance when used in combination designs.

PERFORMANCE OPTIONS

See Common Features below.

COMMON FEATURES

GLASS

In addition to stainless steel glass spacers, black or white glass spacers are available to allow the spacer to blend in with the unit color.

¾" (19) dual-pane glass construction provides exceptional energy performance. High-Performance dual-pane glass options include:

- Low-E4® glass
- Low-E4 HeatLock® glass
- Low-E4 SmartSun™ glass
- Low-E4 SmartSun HeatLock glass
- Low-E4 Sun glass

For even greater energy performance, 1" (25) triple-pane glass is available in these options:

- Low-E4 glass
- Low-E4 Enhanced glass
- Low-E4 Enhanced HeatLock glass
- Low-E4 SmartSun glass
- Low-E4 SmartSun Enhanced glass
- Low-E4 SmartSun Enhanced HeatLock glass

Tempered and other glass options are available; contact your Andersen supplier.

A removable translucent film helps shield the glass from damage during delivery and construction, and simplifies finishing at the job site.

Patterned Glass

Patterned glass options are available. See page 15 for more details.

Between-the-Glass Art Glass

Available in a variety of original patterns. For details, see page 16 or visit **andersenwindows.com/artglass.**

PERFORMANCE OPTIONS

Performance Grade (PG) Upgrades

Performance Grade (PG) upgrades are now available for A-Series windows in most sizes of standard non-impact windows allowing these units to achieve higher performance ratings. PG upgrade ratings are more comprehensive than Design Pressure (DP) ratings for measuring product performance. For up-to-date performance information of individual products, visit **andersenwindows.com**.

Stormwatch® PROTECTION

A-Series windows available with Stormwatch® Protection include impact-resistant glass in addition to structural upgrades for coastal areas. For a copy of the A-Series Coastal Product Guide, visit **andersenwindows.com/coastal.**

*Visit andersenwindows.com/warranty for details.
"Flexacron" is a registered trademark of PPG Industries, Inc.
Dimensions in parentheses are in millimeters.

EXTERIORS & INTERIORS

EXTERIOR COLORS

White | Canvas | Prairie Grass | Sandtone | Terratone | Cocoa Bean | Dark Bronze | Red Rock | Forest Green | Dove Gray | Black

INTERIOR WOOD SPECIES

Pine | Maple | Vertical Grain Douglas Fir | Oak | Mahogany* | Cherry

FACTORY-FINISHED INTERIORS

Clear Coat | Honey | Cinnamon | Mocha | Russet | Espresso

All wood interiors are unfinished unless a finish is specified. Clear coat available on all wood species; all other factory finishes on pine, maple and oak. Shown above on pine. Naturally occurring variations in grain, color and texture of wood make each window one of a kind.

INTERIOR PAINT COLORS

White | Birch Bark | Primed (for paint) | Canvas | Sandtone | Dark Bronze | Black

Also available in 11 exterior colors shown above; contact your Andersen supplier. Painted colors on pine or maple.

4-TONE INTERIORS

Mix and match up to four interior wood species, stains and/or colors for your window's frame, sash, grilles and extension jambs to achieve a look unique to your project.

HARDWARE**

Casement, Awning & Venting Transom

CONTEMPORARY FOLDING

Black | Bright Brass | Oil Rubbed Bronze
Satin Nickel | Stone | White

TRADITIONAL FOLDING

Antique Brass | Black | Bright Brass | Distressed Bronze
Distressed Nickel | Oil Rubbed Bronze | Satin Nickel
Stone | White

Folding handles avoid interference with window treatments.
Bold name denotes finish shown.

Double-Hung

Lock & Keeper

Antique Brass | Black | Bright Brass | Distressed Bronze | Distressed Nickel
Oil Rubbed Bronze | **Satin Nickel** | Stone | White

Optional Bar Lift

Optional Hand Lift

Optional Finger Lift

Antique Brass | Black | Bright Brass | Distressed Bronze | Distressed Nickel
Oil Rubbed Bronze | **Satin Nickel** | Stone | White

Bold name denotes finish shown.

HARDWARE FINISHES

Antique Brass | Black | Bright Brass | Distressed Bronze | Distressed Nickel | Oil Rubbed Bronze | Satin Nickel | Stone | White

*Actual wood species is either Sapele or Sipo, both non-endangered species grown in Africa, with color and characteristics similar to Central American mahoganies.
**Hardware sold separately except double-hung lock and keeper.
Distressed bronze and oil rubbed bronze are "living" finishes that will change with time and use.
Printing limitations prevent exact replication of colors and finishes. See your Andersen supplier for actual color and finish samples.

ACCESSORIES Sold Separately

FRAME

Extension Jambs

Extension jambs are available in pine, maple, vertical grain Douglas fir, oak, mahogany* and cherry, precut to fit the unit. Available in 1/16" (1.5) increments up to 7 1/8" (181) and can be prefinished in six stain colors as well as all interior paint options to match the interior of the unit. This option is also available factory applied.

Stools for Double-Hung Windows

Available in all six wood species and all prefinished options. Stools are available for 4 9/16" (116), 5 1/4" (133), 6 9/16" (167) and 7 1/8" (181) wall depths.

HARDWARE

Corrosion-Resistant Components

Corrosion-resistant hinge and operator arm hardware on casement, awning and venting transom windows is designed for applications in harsh and corrosive environments such as heavy industrial or coastal areas.** Shown on a 400 Series casement window.

Window Opening Control Device

A window opening control device is available for casement and double-hung windows, which limits sash travel to less than 4" (102) when the window is first opened. Available in factory applied, or as a field-applied kit in stone, white and black. Shown on a casement window.

Vent Limiter for Awning & Venting Transom Windows

Available for awning and venting transom windows, which prevents opening the sash more than 4" (102). Available factory applied or as a field-applied kit (part #9184908).

Power Operator for Awning & Venting Transom Windows

Awning windows can be ordered with an operator enhanced by PowerAssist™ technology that opens and closes the window with the touch of a button. Easy to install, the 24-volt system features a concealed window power driver, battery backup in case of a power outage, and a moisture sensor that automatically closes the window when it rains. A wireless remote control is available (sold separately).

The PowerAssist system is controlled by a wall-mounted console, which includes a power box, battery, touch pad and mounting bracket. Power operators are available as field-applied kits.Available for windows up to 5' (1524) wide. Not available for units with Stormwatch® Protection or PG upgrades.

INSECT SCREENS

Full or Half Window Insect Screens

Full insect screens are available for all venting windows. Andersen also offers half insect screens for the lower sash of double-hung windows.

TruScene® Insect Screen

Our TruScene insect screens let in over 25% more fresh air† and provide 50% greater clarity than Andersen conventional insect screens, all while keeping out unwanted small insects. For casement, awning and venting transom windows, frames are available in white, gold dust and stone, as well as prefinished in six wood veneers, six stains and all interior paint options. Insect screens for double-hung windows are installed on the exterior of the window, and frames match the product's exterior color.

Conventional Insect Screens

Aluminum insect screens are available with frames finished in white, gold dust or stone, and in all interior paint options for casement, awning and venting transom windows. Insect screens for double-hung windows match the product's exterior color.

GRILLES

Grilles are available in a variety of configurations and widths. See page 19 for details.

EXTERIOR TRIM

Available with Andersen exterior trim. See the exterior trim section starting on page 189.

*Actual wood species is either Sapele or Sipo, both non-endangered species grown in Africa, with color and characteristics similar to Central American mahoganies.
**Visit andersenwindows.com/warranty for details.
†TruScene insect screens let in over 25% more fresh air than standard Andersen fiberglass insect screens.
Dimensions in parentheses are in millimeters.

Table of Casement Window Sizes

Scale 1/8" (3) = 1'-0" (305) — 1:96

Window Dimension	1'-7 1/4" (489)	1'-11 1/4" (591)	2'-3 1/4" (692)	2'-5 1/4" (743)	2'-7 1/4" (794)	2'-9 1/4" (845)	2'-11 1/4" (895)	3'-1 1/4" (946)	3'-3 1/4" (997)	3'-5 1/4" (1048)	3'-7 1/4" (1099)	3'-9 1/4" (1149)	3'-11 1/4" (1200)
Minimum Rough Opening	1'-8" (508)	2'-0" (610)	2'-4" (711)	2'-6" (762)	2'-8" (813)	2'-10" (864)	3'-0" (914)	3'-2" (965)	3'-4" (1016)	3'-6" (1067)	3'-8" (1118)	3'-10" (1168)	4'-0" (1219)
Unobstructed Glass	12 5/8" (320)	16 5/8" (422)	20 5/8" (523)	22 5/8" (574)	24 5/8" (625)	26 5/8" (676)	28 5/8" (726)	30 5/8" (777)	32 5/8" (828)	34 5/8" (930)	36 5/8" (1031)	38 5/8" (1133)	40 5/8" (1234)

CUSTOM SIZES AVAILABLE

1'-11 1/4" (591)	2'-0" (610)	15 13/16" (401)
2'-3 1/4" (692)	2'-4" (711)	19 13/16" (503)
2'-7 1/4" (794)	2'-8" (813)	23 13/16" (605)
2'-11 1/4" (895)	3'-0" (914)	27 13/16" (706)
3'-3 1/4" (997)	3'-4" (1016)	31 13/16" (808)
3'-7 1/4" (1099)	3'-8" (1118)	35 13/16" (909)
3'-11 1/4" (1200)	4'-0" (1219)	39 13/16" (1011)
4'-3 1/4" (1302)	4'-4" (1321)	43 13/16" (1113)
4'-7 1/4" (1403)	4'-8" (1422)	47 13/16" (1214)
4'-11 1/4" (1505)	5'-0" (1524)	51 13/16" (1316)
5'-3 1/4" (1607)	5'-4" (1626)	55 13/16" (1417)

CUSTOM SIZES AVAILABLE

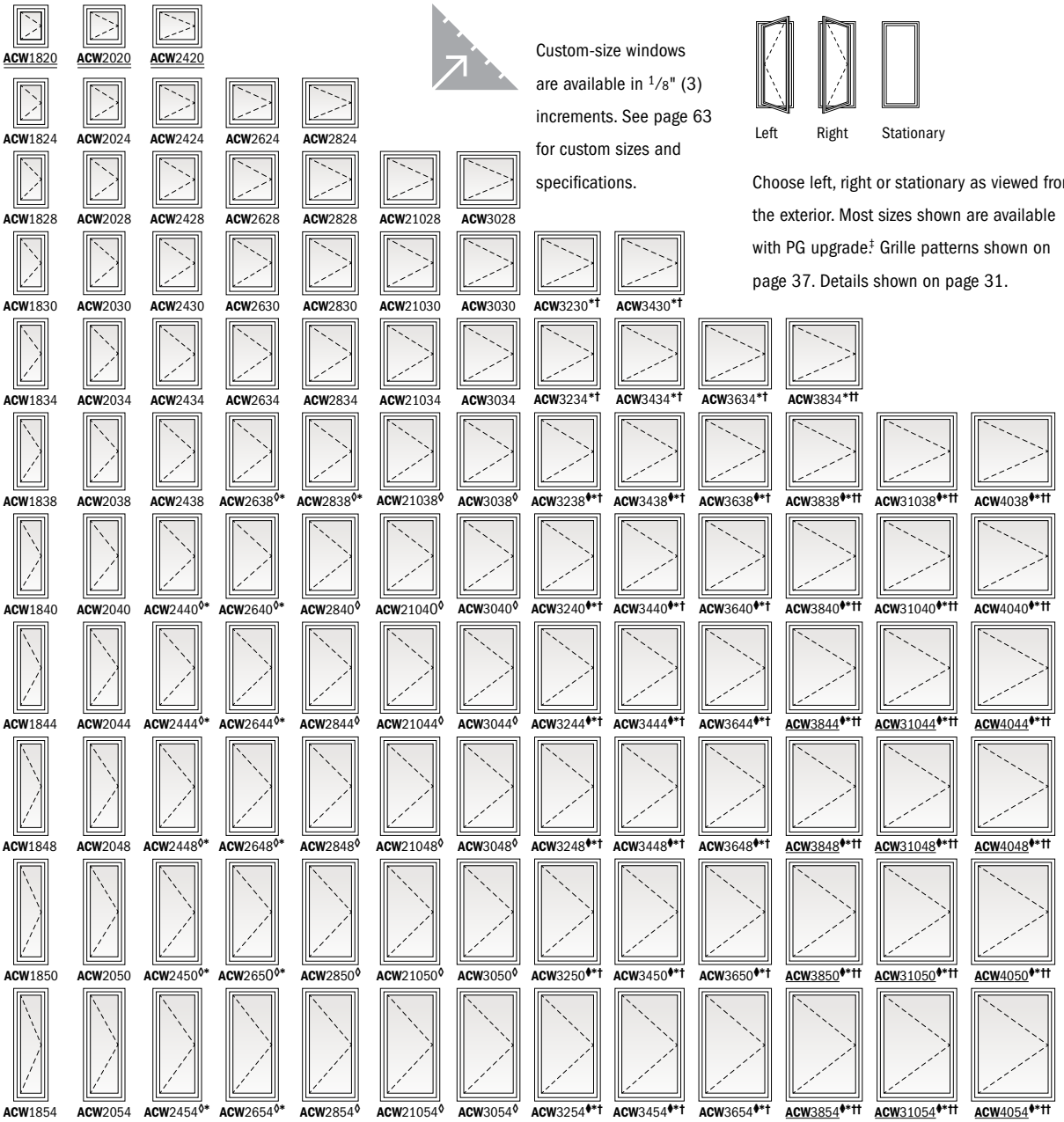

Custom-size windows are available in 1/8" (3) increments. See page 63 for custom sizes and specifications.

Choose left, right or stationary as viewed from the exterior. Most sizes shown are available with PG upgrade‡ Grille patterns shown on page 37. Details shown on page 31.

continued on next page

• "Window Dimension" always refers to outside frame-to-frame dimension.
• "**Minimum Rough Opening**" **dimensions may need to be increased to allow for use of building wraps, flashing, sill panning, brackets, fasteners or other items. See pages 226-227 for more details.**
• Dimensions in parentheses are in millimeters.
‡PG upgrade is not available for venting sizes shown with an underscore (i.e. **ACW**3844). PG upgrade is not available for stationary or venting sizes shown with a double underscore (i.e. **ACW**2020).
◊Meets or exceeds clear opening area of 5.7 sq. ft. or 0.53 m², clear opening width of 20" (508) and clear opening height of 24" (610). See tables on pages 28-31.
◆Meets or exceeds clear opening area of 5.7 sq. ft. or 0.53 m², clear opening width of 20" (508) and clear opening height of 24" (610) with a limited sash opening.
*Hinged for widest clear opening (straight-arm operator). All other sizes have hinge with wash mode (split-arm operator).
†Not available with triple-pane annealed glass.
††Not available with triple-pane annealed or tempered glass.

Table of Casement Window Sizes *(continued)*

Scale 1/8" (3) = 1'-0" (305) – 1:96

Notes on the previous page also apply to this page.

Window Dimension	1'-7 1/4" (489)	1'-11 1/4" (591)	2'-3 1/4" (692)	2'-5 1/4" (743)	2'-7 1/4" (794)	2'-9 1/4" (845)	2'-11 1/4" (895)	3'-1 1/4" (946)	3'-3 1/4" (997)	3'-5 1/4" (1048)	3'-7 1/4" (1099)	3'-9 1/4" (1149)	3'-11 1/4" (1200)
Minimum Rough Opening	1'-8" (508)	2'-0" (610)	2'-4" (711)	2'-6" (762)	2'-8" (813)	2'-10" (864)	3'-0" (914)	3'-2" (965)	3'-4" (1016)	3'-6" (1067)	3'-8" (1118)	3'-10" (1168)	4'-0" (1219)
Unobstructed Glass	12 5/8" (320)	16 5/8" (422)	20 5/8" (523)	22 5/8" (574)	24 5/8" (625)	26 5/8" (676)	28 5/8" (726)	30 5/8" (777)	32 5/8" (828)	34 5/8" (930)	36 5/8" (1031)	38 5/8" (1133)	40 5/8" (1234)

CUSTOM SIZES AVAILABLE

5'-7 1/4" (1708) × 5'-8" (1727) / 59 13/16" (1519)	ACW1858	ACW2058	ACW2458◊*	ACW2658◊*	ACW2858◊	ACW21058◊	ACW3058◊	ACW3258◊*†	ACW3458◊*†	ACW3658◊*†	ACW3858◊*††	ACW31058◊*††	ACW4058◊*††
5'-11 1/4" (1810) × 6'-0" (1829) / 63 13/16" (1621)	ACW1860	ACW2060	ACW2460◊*	ACW2660◊*	ACW2860◊†	ACW21060◊†	ACW3060◊†	ACW3260◊*†	ACW3460◊*†	ACW3660◊*†	ACW3860◊*†	ACW31060◊*†	ACW4060◊*†
6'-3 1/4" (1911) × 6'-4" (1930) / 67 13/16" (1722)	ACW1864†	ACW2064†	ACW2464◊*†	ACW2664◊*†	ACW2864◊*†	ACW21064◊*†	ACW3064◊*†	ACW3264◊*†	ACW3464◊*†	ACW3664◊*†	ACW3864◊*†	ACW31064◊*†	ACW4064◊*†
6'-7 1/4" (2013) × 6'-8" (2032) / 71 13/16" (1824)	ACW1868†	ACW2068†	ACW2468◊*†	ACW2668◊*†	ACW2868◊*†	ACW21068◊*†	ACW3068◊*†	ACW3268◊*†	ACW3468◊*†	ACW3668◊*†	ACW3868◊*†	ACW31068◊*†	ACW4068◊*†
6'-11 1/4" (2115) × 7'-0" (2134) / 75 13/16" (1925)	ACW1870†	ACW2070†	ACW2470◊*†	ACW2670◊*†	ACW2870◊*†	ACW21070◊*†	ACW3070◊*†	ACW3270◊*†	ACW3470◊*†	ACW3670◊*†	ACW3870◊*†	ACW31070◊*†	ACW4070◊*†
7'-3 1/4" (2216) × 7'-4" (2235) / 79 13/16" (2027)	ACW1874††	ACW2074††	ACW2474◊*††	ACW2674◊*††	ACW2874◊*††	ACW21074◊*††	ACW3074◊*††	ACW3274◊*††	ACW3474◊*††	ACW3674◊*††	ACW3874◊*††	ACW31074◊*††	ACW4074◊*††
7'-7 1/4" (2318) × 7'-8" (2337) / 83 13/16" (2129)	ACW1878††	ACW2078††	ACW2478◊*††	ACW2678◊*††	ACW2878◊*††	ACW21078◊*††	ACW3078◊*††	ACW3278◊*††	ACW3478◊*††	ACW3678◊*††	ACW3878◊*††	ACW31078◊*††	ACW4078◊*††
7'-11 1/4" (2419) × 8'-0" (2438) / 87 13/16" (2230)	ACW1880††	ACW2080††	ACW2480◊*††	ACW2680◊*††	ACW2880◊*††	ACW21080◊*††	ACW3080◊*††	ACW3280◊*††	ACW3480◊*††	ACW3680◊*††	ACW3880◊*††	ACW31080◊*††	ACW4080◊*††

Casement Window Opening and Area Specifications

Window Number	Clear Opening Area Sq. Ft./(m²)		Clear Opening in Full Open Position Width Inches/(mm)		Height Inches/(mm)		Glass Area Sq. Ft./(m²)		Vent Area Sq. Ft./(m²)		Top of Subfloor to Top of Inside Sill Stop Inches/(mm)		Overall Window Area Sq. Ft./(m²)	
ACW1820	1.20	(0.11)	9 13/16"	(250)	17 5/8"	(447)	1.38	(0.13)	1.55	(0.14)	62 1/16"	(1576)	3.11	(0.29)
ACW1824	1.48	(0.14)	9 13/16"	(250)	21 5/8"	(549)	1.73	(0.16)	1.91	(0.18)	58 1/16"	(1475)	3.64	(0.34)
ACW1828	1.75	(0.16)	9 13/16"	(250)	25 5/8"	(650)	2.08	(0.19)	2.26	(0.21)	54 1/16"	(1373)	4.18	(0.39)
ACW1830	2.02	(0.19)	9 13/16"	(250)	29 5/8"	(752)	2.43	(0.23)	2.61	(0.24)	50 1/16"	(1271)	4.71	(0.44)
ACW1834	2.29	(0.21)	9 13/16"	(250)	33 5/8"	(853)	2.78	(0.26)	2.97	(0.28)	46 1/16"	(1170)	5.25	(0.49)
ACW1838	2.57	(0.24)	9 13/16"	(250)	37 5/8"	(955)	3.13	(0.29)	3.32	(0.31)	42 1/16"	(1068)	5.78	(0.54)
ACW1840	2.84	(0.26)	9 13/16"	(250)	41 5/8"	(1057)	3.48	(0.32)	3.67	(0.34)	38 1/16"	(967)	6.32	(0.59)
ACW1844	3.11	(0.29)	9 13/16"	(250)	45 5/8"	(1159)	3.83	(0.36)	4.03	(0.37)	34 1/16"	(865)	6.85	(0.64)
ACW1848	3.39	(0.31)	9 13/16"	(250)	49 5/8"	(1260)	4.18	(0.39)	4.38	(0.41)	30 1/16"	(763)	7.39	(0.69)
ACW1850	3.66	(0.34)	9 13/16"	(250)	53 5/8"	(1362)	4.53	(0.42)	4.73	(0.44)	26 1/16"	(662)	7.92	(0.74)
ACW1854	3.93	(0.37)	9 13/16"	(250)	57 5/8"	(1464)	4.88	(0.45)	5.09	(0.47)	22 1/16"	(560)	8.46	(0.79)
ACW1858	3.55	(0.33)	8 5/16"	(211)	61 5/8"	(1565)	5.23	(0.49)	5.44	(0.51)	18 1/16"	(459)	8.99	(0.84)
ACW1860	3.78	(0.35)	8 5/16"	(211)	65 5/8"	(1667)	5.58	(0.52)	5.79	(0.54)	14 1/16"	(357)	9.52	(0.88)
ACW1864 †	4.68	(0.43)	9 11/16"	(246)	69 5/8"	(1768)	5.93	(0.55)	6.15	(0.57)	10 1/16"	(256)	10.06	(0.93)
ACW1868 †	4.95	(0.46)	9 11/16"	(246)	73 5/8"	(1870)	6.28	(0.58)	6.50	(0.60)	6 1/16"	(154)	10.59	(0.98)
ACW1870 †	5.22	(0.48)	9 11/16"	(246)	77 5/8"	(1972)	6.63	(0.62)	6.85	(0.64)	15 9/16"	(395)	11.13	(1.03)
ACW1874 ††	5.49	(0.51)	9 11/16"	(246)	81 5/8"	(2073)	6.98	(0.65)	7.20	(0.67)	11 9/16"	(294)	11.66	(1.08)
ACW1878 ††	5.76	(0.54)	9 11/16"	(246)	85 5/8"	(2175)	7.33	(0.68)	7.56	(0.70)	7 9/16"	(192)	12.20	(1.13)
ACW1880 ††	6.03	(0.56)	9 11/16"	(246)	89 5/8"	(2276)	7.68	(0.71)	7.91	(0.73)	3 9/16"	(90)	12.73	(1.18)
ACW2020	1.69	(0.16)	13 13/16"	(351)	17 5/8"	(447)	1.82	(0.17)	2.04	(0.19)	62 1/16"	(1576)	3.75	(0.35)
ACW2024	2.08	(0.19)	13 13/16"	(351)	21 5/8"	(549)	2.28	(0.21)	2.51	(0.23)	58 1/16"	(1475)	4.40	(0.41)
ACW2028	2.46	(0.23)	13 13/16"	(351)	25 5/8"	(650)	2.74	(0.25)	2.97	(0.28)	54 1/16"	(1373)	5.05	(0.47)
ACW2030	2.84	(0.26)	13 13/16"	(351)	29 5/8"	(752)	3.20	(0.30)	3.44	(0.32)	50 11/16"	(1271)	5.69	(0.53)
ACW2034	3.23	(0.30)	13 13/16"	(351)	33 5/8"	(853)	3.67	(0.34)	3.90	(0.36)	46 1/16"	(1170)	6.34	(0.59)
ACW2038	3.61	(0.34)	13 13/16"	(351)	37 5/8"	(955)	4.13	(0.38)	4.36	(0.41)	42 1/16"	(1068)	6.98	(0.65)
ACW2040	4.00	(0.37)	13 13/16"	(351)	41 5/8"	(1057)	4.59	(0.43)	4.83	(0.45)	38 1/16"	(967)	7.63	(0.71)
ACW2044	4.38	(0.41)	13 13/16"	(351)	45 5/8"	(1159)	5.05	(0.47)	5.29	(0.49)	34 1/16"	(865)	8.27	(0.77)
ACW2048	4.24	(0.39)	12 5/16"	(313)	49 5/8"	(1260)	5.51	(0.51)	5.76	(0.54)	30 1/16"	(763)	8.92	(0.83)
ACW2050	4.58	(0.43)	12 5/16"	(313)	53 5/8"	(1362)	5.97	(0.55)	6.22	(0.58)	26 1/16"	(662)	9.57	(0.89)
ACW2054	4.92	(0.46)	12 5/16"	(313)	57 5/8"	(1464)	6.43	(0.60)	6.69	(0.62)	22 1/16"	(560)	10.21	(0.95)
ACW2058	5.26	(0.49)	12 5/16"	(313)	61 5/8"	(1565)	6.89	(0.64)	7.15	(0.66)	18 1/16"	(459)	10.86	(1.01)
ACW2060	5.61	(0.52)	12 5/16"	(313)	65 5/8"	(1667)	7.35	(0.68)	7.61	(0.71)	14 1/16"	(357)	11.50	(1.07)
ACW2064 †	6.52	(0.61)	13 1/2"	(343)	69 5/8"	(1768)	7.82	(0.73)	8.08	(0.75)	10 1/16"	(256)	12.15	(1.13)
ACW2068 †	6.89	(0.64)	13 1/2"	(343)	73 5/8"	(1870)	8.28	(0.77)	8.54	(0.79)	6 1/16"	(154)	12.80	(1.19)
ACW2070 †	7.27	(0.68)	13 1/2"	(343)	77 5/8"	(1972)	8.74	(0.81)	9.01	(0.84)	15 9/16"	(395)	13.44	(1.25)
ACW2074 ††	7.64	(0.71)	13 1/2"	(343)	81 5/8"	(2073)	9.20	(0.85)	9.47	(0.88)	11 9/16"	(294)	14.09	(1.31)
ACW2078 ††	8.02	(0.75)	13 1/2"	(343)	85 5/8"	(2175)	9.66	(0.90)	9.94	(0.92)	7 9/16"	(192)	14.73	(1.37)
ACW2080 ††	8.39	(0.78)	13 1/2"	(343)	89 5/8"	(2276)	10.12	(0.94)	10.40	(0.97)	3 9/16"	(90)	15.38	(1.43)
ACW2420	1.99	(0.18)	16 5/16"	(414)	17 5/8"	(447)	2.26	(0.21)	2.53	(0.24)	62 1/16"	(1576)	4.40	(0.41)
ACW2424	2.45	(0.23)	16 5/16"	(414)	21 5/8"	(549)	2.83	(0.26)	3.11	(0.29)	58 1/16"	(1475)	5.16	(0.48)
ACW2428	2.90	(0.27)	16 5/16"	(414)	25 5/8"	(650)	3.40	(0.32)	3.68	(0.34)	54 1/16"	(1373)	5.91	(0.55)
ACW2430	3.35	(0.31)	16 5/16"	(414)	29 5/8"	(752)	3.98	(0.37)	4.28	(0.40)	50 1/16"	(1271)	6.67	(0.62)
ACW2434	3.80	(0.35)	16 5/16"	(414)	33 5/8"	(853)	4.55	(0.42)	4.83	(0.45)	46 1/16"	(1170)	7.43	(0.69)
ACW2438	4.26	(0.40)	16 5/16"	(414)	37 5/8"	(955)	5.12	(0.48)	5.41	(0.50)	42 1/16"	(1068)	8.18	(0.76)
ACW2440 ◊*	5.92	(0.55)	20 1/2"	(521)	41 5/8"	(1057)	5.69	(0.53)	5.98	(0.56)	38 1/16"	(967)	8.94	(0.83)
ACW2444 ◊*	6.49	(0.60)	20 1/2"	(521)	45 5/8"	(1159)	6.27	(0.58)	6.56	(0.61)	34 1/16"	(865)	9.70	(0.90)
ACW2448 ◊*	7.06	(0.66)	20 1/2"	(521)	49 5/8"	(1260)	6.84	(0.64)	7.13	(0.66)	30 1/16"	(763)	10.46	(0.97)
ACW2450 ◊*	7.63	(0.71)	20 1/2"	(521)	53 5/8"	(1362)	7.41	(0.69)	7.71	(0.72)	26 1/16"	(662)	11.21	(1.04)
ACW2454 ◊*	8.20	(0.76)	20 1/2"	(521)	57 5/8"	(1464)	7.98	(0.74)	8.29	(0.77)	22 1/16"	(560)	11.97	(1.11)
ACW2458 ◊*	8.77	(0.81)	20 1/2"	(521)	61 5/8"	(1565)	8.55	(0.79)	8.86	(0.82)	18 1/16"	(459)	12.73	(1.18)
ACW2460 ◊*	9.34	(0.87)	20 1/2"	(521)	65 5/8"	(1667)	9.13	(0.85)	9.44	(0.88)	14 1/16"	(357)	13.48	(1.25)
ACW2464 ⧫*†	9.95	(0.92)	20 5/8"	(524)	69 5/8"	(1768)	9.70	(0.90)	10.01	(0.93)	10 1/16"	(256)	14.24	(1.32)
ACW2468 ⧫*†	10.52	(0.98)	20 5/8"	(524)	73 5/8"	(1870)	10.27	(0.95)	10.59	(0.98)	6 1/16"	(154)	15.00	(1.39)
ACW2470 ⧫*†	11.09	(1.03)	20 5/8"	(524)	77 5/8"	(1972)	10.84	(1.01)	11.16	(1.04)	15 9/16"	(395)	15.75	(1.46)
ACW2474 ⧫*††	11.66	(1.08)	20 5/8"	(524)	81 5/8"	(2073)	11.42	(1.06)	11.74	(1.09)	11 9/16"	(294)	16.51	(1.53)
ACW2478 ⧫*††	12.23	(1.14)	20 5/8"	(524)	85 5/8"	(2175)	11.99	(1.11)	12.31	(1.14)	7 9/16"	(192)	17.27	(1.60)
ACW2480 ⧫*††	12.80	(1.19)	20 5/8"	(524)	89 5/8"	(2276)	12.56	(1.17)	12.89	(1.20)	3 9/16"	(90)	18.02	(1.67)
ACW2624	2.75	(0.26)	18 5/16"	(465)	21 5/8"	(549)	3.11	(0.29)	3.41	(0.32)	58 1/16"	(1475)	5.54	(0.51)
ACW2628	3.25	(0.30)	18 5/16"	(465)	25 5/8"	(650)	3.74	(0.35)	4.04	(0.38)	54 1/16"	(1373)	6.35	(0.59)
ACW2630	3.76	(0.35)	18 5/16"	(465)	29 5/8"	(752)	4.36	(0.41)	4.67	(0.43)	50 1/16"	(1271)	7.16	(0.67)
ACW2634	4.27	(0.40)	18 5/16"	(465)	33 5/8"	(853)	4.99	(0.46)	5.30	(0.49)	46 1/16"	(1170)	7.97	(0.74)
ACW2638 ◊*	5.88	(0.55)	22 1/2"	(572)	37 5/8"	(955)	5.62	(0.52)	5.93	(0.55)	42 1/16"	(1068)	8.79	(0.82)

continued on next page

• "Top of Subfloor to Top of Inside Sill Stop" is calculated based upon a structural header height of 6'-10 1/2" (2096).
• Dimensions in parentheses are in millimeters or square meters.
◊Meets or exceeds clear opening area of 5.7 sq. ft. or 0.53 m², clear opening width of 20" (508) and clear opening height of 24" (610).
⧫Meets or exceeds clear opening area of 5.7 sq. ft. or 0.53 m², clear opening width of 20" (508) and clear opening height of 24" (610) with a limited sash opening.
*Hinged for widest clear opening (straight-arm operator). All other sizes have hinge with wash mode (split-arm operator).
†Not available with triple-pane annealed glass.
††Not available with triple-pane annealed or tempered glass.

Casement Window Opening and Area Specifications *(continued)*

Window Number	Clear Opening Area Sq. Ft./(m²)		Clear Opening in Full Open Position Width Inches/(mm)		Height Inches/(mm)		Glass Area Sq. Ft./(m²)		Vent Area Sq. Ft./(m²)		Top of Subfloor to Top of Inside Sill Stop Inches/(mm)		Overall Window Area Sq. Ft./(m²)	
ACW2640 ◊*	6.50	(0.60)	22 1/2"	(572)	41 5/8"	(1057)	6.25	(0.58)	6.56	(0.61)	38 1/16"	(967)	9.60	(0.89)
ACW2644 ◊*	7.13	(0.66)	22 1/2"	(572)	45 5/8"	(1159)	6.87	(0.64)	7.19	(0.67)	34 1/16"	(865)	10.41	(0.97)
ACW2648 ◊*	7.75	(0.72)	22 1/2"	(572)	49 5/8"	(1260)	7.50	(0.70)	7.82	(0.73)	30 1/16"	(763)	11.22	(1.04)
ACW2650 ◊*	8.38	(0.78)	22 1/2"	(572)	53 5/8"	(1362)	8.13	(0.76)	8.45	(0.79)	26 1/16"	(662)	12.04	(1.12)
ACW2654 ◊*	9.01	(0.84)	22 1/2"	(572)	57 5/8"	(1464)	8.76	(0.81)	9.09	(0.84)	22 1/16"	(560)	12.85	(1.19)
ACW2658 ◊*	9.63	(0.89)	22 1/2"	(572)	61 5/8"	(1565)	9.39	(0.87)	9.72	(0.90)	18 1/16"	(459)	13.66	(1.27)
ACW2660 ◊*	10.26	(0.95)	22 1/2"	(572)	65 5/8"	(1667)	10.01	(0.93)	10.35	(0.96)	14 1/16"	(357)	14.47	(1.34)
ACW2664 ◆*†	10.91	(1.01)	22 5/8"	(575)	69 5/8"	(1768)	10.64	(0.99)	10.98	(1.02)	10 1/16"	(256)	15.29	(1.42)
ACW2668 ◆*†	11.54	(1.07)	22 5/8"	(575)	73 5/8"	(1870)	11.27	(1.05)	11.61	(1.08)	6 1/16"	(154)	16.10	(1.50)
ACW2670 ◆*†	12.17	(1.13)	22 5/8"	(575)	77 5/8"	(1972)	11.90	(1.11)	12.24	(1.14)	15 9/16"	(395)	16.91	(1.57)
ACW2674 ◆*††	12.79	(1.19)	22 5/8"	(575)	81 5/8"	(2073)	12.52	(1.16)	12.87	(1.20)	11 9/16"	(294)	17.72	(1.65)
ACW2678 ◆*††	13.42	(1.25)	22 5/8"	(575)	85 5/8"	(2175)	13.15	(1.22)	13.50	(1.25)	7 9/16"	(192)	18.54	(1.72)
ACW2680 ◆*††	14.05	(1.31)	22 5/8"	(575)	89 5/8"	(2276)	13.78	(1.28)	14.13	(1.31)	3 9/16"	(90)	19.35	(1.80)
ACW2824	3.05	(0.28)	20 5/16"	(516)	21 5/8"	(549)	3.38	(0.31)	3.71	(0.34)	58 1/16"	(1475)	5.91	(0.55)
ACW2828	3.61	(0.34)	20 5/16"	(516)	25 5/8"	(650)	4.07	(0.38)	4.39	(0.41)	54 1/16"	(1373)	6.78	(0.63)
ACW2830	4.17	(0.39)	20 5/16"	(516)	29 5/8"	(752)	4.75	(0.44)	5.08	(0.47)	50 1/16"	(1271)	7.65	(0.71)
ACW2834	4.74	(0.44)	20 5/16"	(516)	33 5/8"	(853)	5.43	(0.50)	5.77	(0.54)	46 1/16"	(1170)	8.52	(0.79)
ACW2838 ◊*	6.40	(0.59)	24 1/2"	(623)	37 5/8"	(955)	6.12	(0.57)	6.45	(0.60)	42 1/16"	(1068)	9.39	(0.87)
ACW2840 ◊	5.87	(0.55)	20 5/16"	(516)	41 5/8"	(1057)	6.80	(0.63)	7.14	(0.66)	38 1/16"	(967)	10.25	(0.95)
ACW2844 ◊	6.43	(0.60)	20 5/16"	(516)	45 5/8"	(1159)	7.48	(0.69)	7.83	(0.73)	34 1/16"	(865)	11.12	(1.03)
ACW2848 ◊	6.99	(0.65)	20 5/16"	(516)	49 5/8"	(1260)	8.17	(0.76)	8.51	(0.79)	30 1/16"	(763)	11.99	(1.11)
ACW2850 ◊	7.56	(0.70)	20 5/16"	(516)	53 5/8"	(1362)	8.85	(0.82)	9.20	(0.85)	26 1/16"	(662)	12.86	(1.19)
ACW2854 ◊	9.44	(0.88)	23 19/32"	(599)	57 5/8"	(1464)	9.53	(0.89)	9.89	(0.92)	22 1/16"	(560)	13.73	(1.28)
ACW2858 ◊	10.09	(0.94)	23 19/32"	(599)	61 5/8"	(1565)	10.22	(0.95)	10.57	(0.98)	18 1/16"	(459)	14.59	(1.36)
ACW2860 ◊†	10.75	(1.00)	23 19/32"	(599)	65 5/8"	(1667)	10.90	(1.01)	11.26	(1.05)	14 1/16"	(357)	15.46	(1.44)
ACW2864 ◆*†	9.95	(0.92)	20 9/16"	(522)	69 5/8"	(1768)	11.58	(1.08)	11.95	(1.11)	10 1/16"	(256)	16.33	(1.52)
ACW2868 ◆*†	10.52	(0.98)	20 9/16"	(522)	73 5/8"	(1870)	12.27	(1.14)	12.63	(1.17)	6 1/16"	(154)	17.20	(1.60)
ACW2870 ◆*†	11.09	(1.03)	20 9/16"	(522)	77 5/8"	(1972)	12.95	(1.20)	13.32	(1.24)	15 9/16"	(395)	18.07	(1.68)
ACW2874 ◆*††	11.66	(1.08)	20 9/16"	(522)	81 5/8"	(2073)	13.63	(1.27)	14.00	(1.30)	11 9/16"	(294)	18.93	(1.76)
ACW2878 ◆*††	12.23	(1.14)	20 9/16"	(522)	85 5/8"	(2175)	14.32	(1.33)	14.69	(1.36)	7 9/16"	(192)	19.80	(1.84)
ACW2880 ◆*††	12.81	(1.19)	20 9/16"	(522)	89 5/8"	(2276)	15.00	(1.39)	15.38	(1.43)	3 9/16"	(90)	20.67	(1.92)
ACW21028	3.97	(0.37)	22 5/16"	(567)	25 5/8"	(650)	4.40	(0.41)	4.75	(0.44)	54 1/16"	(1373)	7.22	(0.67)
ACW21030	4.58	(0.43)	22 5/16"	(567)	29 5/8"	(752)	5.14	(0.48)	5.49	(0.51)	50 1/16"	(1271)	8.14	(0.76)
ACW21034	5.20	(0.48)	22 5/16"	(567)	33 5/8"	(853)	5.87	(0.55)	6.23	(0.58)	46 1/16"	(1170)	9.06	(0.84)
ACW21038 ◊	5.82	(0.54)	22 5/16"	(567)	37 5/8"	(955)	6.61	(0.61)	6.98	(0.65)	42 1/16"	(1068)	9.99	(0.93)
ACW21040 ◊	6.44	(0.60)	22 5/16"	(567)	41 5/8"	(1057)	7.35	(0.68)	7.72	(0.72)	38 1/16"	(967)	10.91	(1.01)
ACW21044 ◊	7.06	(0.66)	22 5/16"	(567)	45 5/8"	(1159)	8.09	(0.75)	8.46	(0.79)	34 1/16"	(865)	11.83	(1.10)
ACW21048 ◊	8.78	(0.82)	25 1/2"	(648)	49 5/8"	(1260)	8.83	(0.82)	9.20	(0.85)	30 1/16"	(763)	12.76	(1.19)
ACW21050 ◊	9.49	(0.88)	25 1/2"	(648)	53 5/8"	(1362)	9.57	(0.89)	9.94	(0.92)	26 1/16"	(662)	13.68	(1.27)
ACW21054 ◊	10.20	(0.95)	25 1/2"	(648)	57 5/8"	(1464)	10.31	(0.96)	10.69	(0.99)	22 1/16"	(560)	14.60	(1.36)
ACW21058 ◊	10.91	(1.01)	25 1/2"	(648)	61 5/8"	(1565)	11.05	(1.03)	11.43	(1.06)	18 1/16"	(459)	15.53	(1.44)
ACW21060 ◊†	11.61	(1.08)	25 1/2"	(648)	65 5/8"	(1667)	11.79	(1.10)	12.17	(1.13)	14 1/16"	(357)	16.45	(1.53)
ACW21064 ◆*†	10.71	(0.99)	22 1/8"	(562)	69 5/8"	(1768)	12.52	(1.16)	12.91	(1.20)	10 1/16"	(256)	17.38	(1.61)
ACW21068 ◆*†	11.32	(1.05)	22 1/8"	(562)	73 5/8"	(1870)	13.26	(1.23)	13.65	(1.27)	6 1/16"	(154)	18.30	(1.70)
ACW21070 ◆*†	11.94	(1.11)	22 1/8"	(562)	77 5/8"	(1972)	14.00	(1.30)	14.40	(1.34)	15 9/16"	(395)	19.22	(1.79)
ACW21074 ◆*††	12.56	(1.17)	22 1/8"	(562)	81 5/8"	(2073)	14.74	(1.37)	15.14	(1.41)	11 9/16"	(294)	20.15	(1.87)
ACW21078 ◆*††	13.17	(1.22)	22 1/8"	(562)	85 5/8"	(2175)	15.48	(1.44)	15.88	(1.48)	7 9/16"	(192)	21.07	(1.96)
ACW21080 ◆*††	13.77	(1.28)	22 1/8"	(562)	89 5/8"	(2276)	16.22	(1.51)	16.62	(1.54)	3 9/16"	(90)	21.99	(2.04)
ACW3028	4.32	(0.40)	24 5/16"	(617)	25 5/8"	(650)	4.73	(0.44)	5.10	(0.47)	54 1/16"	(1373)	7.65	(0.71)
ACW3030	5.00	(0.46)	24 5/16"	(617)	29 5/8"	(752)	5.52	(0.51)	5.90	(0.55)	50 1/16"	(1271)	8.63	(0.80)
ACW3034	5.67	(0.53)	24 5/16"	(617)	33 5/8"	(853)	6.32	(0.59)	6.70	(0.62)	46 1/16"	(1170)	9.61	(0.89)
ACW3038 ◊	6.35	(0.59)	24 5/16"	(617)	37 5/8"	(955)	7.11	(0.66)	7.50	(0.70)	42 1/16"	(1068)	10.59	(0.98)
ACW3040 ◊	7.91	(0.73)	27 7/16"	(696)	41 5/8"	(1057)	7.90	(0.73)	8.30	(0.77)	38 1/16"	(967)	11.57	(1.07)
ACW3044 ◊	8.68	(0.81)	27 7/16"	(696)	45 5/8"	(1159)	8.70	(0.81)	9.09	(0.84)	34 1/16"	(865)	12.55	(1.17)
ACW3048 ◊	9.44	(0.88)	27 7/16"	(696)	49 5/8"	(1260)	9.49	(0.88)	9.89	(0.92)	30 1/16"	(763)	13.52	(1.26)
ACW3050 ◊	10.20	(0.95)	27 7/16"	(696)	53 5/8"	(1362)	10.29	(0.96)	10.69	(0.99)	26 1/16"	(662)	14.50	(1.35)
ACW3054 ◊	10.96	(1.02)	27 7/16"	(696)	57 5/8"	(1464)	11.08	(1.03)	11.49	(1.07)	22 1/16"	(560)	15.48	(1.44)
ACW3058 ◊	11.72	(1.09)	27 7/16"	(696)	61 5/8"	(1565)	11.88	(1.10)	12.28	(1.14)	18 1/16"	(459)	16.46	(1.53)
ACW3060 ◊†	12.48	(1.16)	27 7/16"	(696)	65 5/8"	(1667)	12.67	(1.18)	13.08	(1.22)	14 1/16"	(357)	17.44	(1.62)
ACW3064 ◆*†	10.77	(1.00)	22 1/4"	(565)	69 5/8"	(1768)	13.47	(1.25)	13.88	(1.29)	10 1/16"	(256)	18.42	(1.71)
ACW3068 ◆*†	11.39	(1.06)	22 1/4"	(565)	73 5/8"	(1870)	14.26	(1.32)	14.68	(1.36)	6 1/16"	(154)	19.40	(1.80)
ACW3070 ◆*†	12.01	(1.12)	22 1/4"	(565)	77 5/8"	(1972)	15.05	(1.40)	15.47	(1.44)	15 9/16"	(395)	20.38	(1.89)

continued on next page

• "Top of Subfloor to Top of Inside Sill Stop" is calculated based upon a structural header height of 6'-10 1/2" (2096).
• Dimensions in parentheses are in millimeters or square meters.
◊Meets or exceeds clear opening area of 5.7 sq. ft. or 0.53 m², clear opening width of 20" (508) and clear opening height of 24" (610).
◆Meets or exceeds clear opening area of 5.7 sq. ft. or 0.53 m², clear opening width of 20" (508) and clear opening height of 24" (610) with a limited sash opening.
*Hinged for widest clear opening (straight-arm operator). All other sizes have hinge with wash mode (split-arm operator).
†Not available with triple-pane annealed glass.
††Not available with triple-pane annealed or tempered glass.

Casement Window Opening and Area Specifications *(continued)*

Window Number	Clear Opening Area Sq. Ft./(m²)		Clear Opening in Full Open Position Width Inches/(mm)		Height Inches/(mm)		Glass Area Sq. Ft./(m²)		Vent Area Sq. Ft./(m²)		Top of Subfloor to Top of Inside Sill Stop Inches/(mm)		Overall Window Area Sq. Ft./(m²)	
ACW3074♦*††	12.63	(1.17)	22 1/4"	(565)	81 5/8"	(2073)	15.85	(1.47)	16.27	(1.51)	11 9/16"	(294)	21.36	(1.98)
ACW3078♦*††	13.25	(1.23)	22 1/4"	(565)	85 5/8"	(2175)	16.64	(1.55)	17.07	(1.59)	7 9/16"	(192)	22.34	(2.08)
ACW3080♦*††	13.87	(1.29)	22 1/4"	(565)	89 5/8"	(2276)	17.44	(1.62)	17.87	(1.66)	3 9/16"	(90)	23.32	(2.17)
ACW3230*†	4.78	(0.44)	23 1/4"	(591)	29 5/8"	(752)	5.91	(0.55)	6.31	(0.59)	50 1/16"	(1271)	9.12	(0.85)
ACW3234*†	5.43	(0.50)	23 1/4"	(591)	33 5/8"	(853)	6.76	(0.63)	7.17	(0.67)	46 1/16"	(1170)	10.15	(0.94)
ACW3238♦*†	6.07	(0.56)	23 1/4"	(591)	37 5/8"	(955)	7.61	(0.71)	8.02	(0.75)	42 1/16"	(1068)	11.19	(1.04)
ACW3240♦*†	6.72	(0.62)	23 1/4"	(591)	41 5/8"	(1057)	8.46	(0.79)	8.87	(0.82)	38 1/16"	(967)	12.22	(1.14)
ACW3244♦*†	7.36	(0.68)	23 1/4"	(591)	45 5/8"	(1159)	9.31	(0.86)	9.73	(0.90)	34 1/16"	(865)	13.26	(1.23)
ACW3248♦*†	8.01	(0.74)	23 1/4"	(591)	49 5/8"	(1260)	10.16	(0.94)	10.58	(0.98)	30 1/16"	(763)	14.29	(1.33)
ACW3250♦*†	8.65	(0.80)	23 1/4"	(591)	53 5/8"	(1362)	11.01	(1.02)	11.43	(1.06)	26 1/16"	(662)	15.33	(1.42)
ACW3254♦*†	9.30	(0.86)	23 1/4"	(591)	57 5/8"	(1464)	11.86	(1.10)	12.29	(1.14)	22 1/16"	(560)	16.36	(1.52)
ACW3258♦*†	9.95	(0.92)	23 1/4"	(591)	61 5/8"	(1565)	12.71	(1.18)	13.14	(1.22)	18 1/16"	(459)	17.40	(1.62)
ACW3260♦*†	10.59	(0.98)	23 1/4"	(591)	65 5/8"	(1667)	13.56	(1.26)	13.99	(1.30)	14 1/16"	(357)	18.43	(1.71)
ACW3264♦*†	11.24	(1.04)	23 1/4"	(591)	69 5/8"	(1768)	14.41	(1.34)	14.85	(1.38)	10 1/16"	(256)	19.47	(1.81)
ACW3268♦*†	11.88	(1.10)	23 1/4"	(591)	73 5/8"	(1870)	15.26	(1.42)	15.70	(1.46)	6 1/16"	(154)	20.50	(1.90)
ACW3270♦*†	12.53	(1.16)	23 1/4"	(591)	77 5/8"	(1972)	16.11	(1.50)	16.55	(1.54)	15 9/16"	(395)	21.54	(2.00)
ACW3274♦*††	13.18	(1.22)	23 1/4"	(591)	81 5/8"	(2073)	16.96	(1.58)	17.40	(1.62)	11 9/16"	(294)	22.57	(2.10)
ACW3278♦*††	13.82	(1.28)	23 1/4"	(591)	85 5/8"	(2175)	17.81	(1.65)	18.26	(1.70)	7 9/16"	(192)	23.60	(2.19)
ACW3280♦*††	14.47	(1.34)	23 1/4"	(591)	89 5/8"	(2276)	18.66	(1.73)	19.11	(1.78)	3 9/16"	(90)	24.64	(2.29)
ACW3430*†	4.72	(0.44)	23"	(584)	29 5/8"	(752)	6.29	(0.58)	6.72	(0.62)	50 1/16"	(1271)	9.61	(0.89)
ACW3434*†	5.36	(0.50)	23"	(584)	33 5/8"	(853)	7.20	(0.67)	7.63	(0.71)	46 1/16"	(1170)	10.70	(0.99)
ACW3438♦*†	6.00	(0.56)	23"	(584)	37 5/8"	(955)	8.10	(0.75)	8.54	(0.79)	42 1/16"	(1068)	11.79	(1.10)
ACW3440♦*†	6.64	(0.62)	23"	(584)	41 5/8"	(1057)	9.01	(0.84)	9.45	(0.88)	38 1/16"	(967)	12.88	(1.20)
ACW3444♦*†	7.27	(0.68)	23"	(584)	45 5/8"	(1159)	9.92	(0.92)	10.36	(0.96)	34 1/16"	(865)	13.97	(1.30)
ACW3448♦*†	7.91	(0.73)	23"	(584)	49 5/8"	(1260)	10.82	(1.01)	11.27	(1.05)	30 1/16"	(763)	15.06	(1.40)
ACW3450♦*†	8.55	(0.79)	23"	(584)	53 5/8"	(1362)	11.73	(1.09)	12.18	(1.13)	26 1/16"	(662)	16.15	(1.50)
ACW3454♦*†	9.19	(0.85)	23"	(584)	57 5/8"	(1464)	12.63	(1.17)	13.09	(1.22)	22 1/16"	(560)	17.24	(1.60)
ACW3458♦*†	9.83	(0.91)	23"	(584)	61 5/8"	(1565)	13.54	(1.26)	13.99	(1.30)	18 1/16"	(459)	18.33	(1.70)
ACW3460♦*†	10.46	(0.97)	23"	(584)	65 5/8"	(1667)	14.44	(1.34)	14.90	(1.38)	14 1/16"	(357)	19.42	(1.80)
ACW3464♦*†	11.10	(1.03)	23"	(584)	69 5/8"	(1768)	15.35	(1.43)	15.81	(1.47)	10 1/16"	(256)	20.51	(1.91)
ACW3468♦*†	11.74	(1.09)	23"	(584)	73 5/8"	(1870)	16.25	(1.51)	16.72	(1.55)	6 1/16"	(154)	21.60	(2.01)
ACW3470♦*†	12.38	(1.15)	23"	(584)	77 5/8"	(1972)	17.16	(1.59)	17.63	(1.64)	15 9/16"	(395)	22.69	(2.11)
ACW3474♦*††	13.02	(1.21)	23"	(584)	81 5/8"	(2073)	18.07	(1.68)	18.54	(1.72)	11 9/16"	(294)	23.78	(2.21)
ACW3478♦*††	13.66	(1.27)	23"	(584)	85 5/8"	(2175)	18.97	(1.76)	19.45	(1.81)	7 9/16"	(192)	24.87	(2.31)
ACW3480♦*††	14.29	(1.33)	23"	(584)	89 5/8"	(2276)	19.88	(1.85)	20.36	(1.89)	3 9/16"	(90)	25.96	(2.41)
ACW3634*†	5.27	(0.49)	22 9/16"	(573)	33 5/8"	(853)	7.64	(0.71)	8.10	(0.75)	46 1/16"	(1170)	11.24	(1.04)
ACW3638♦*†	5.90	(0.55)	22 9/16"	(573)	37 5/8"	(955)	8.60	(0.80)	9.06	(0.84)	42 1/16"	(1068)	12.39	(1.15)
ACW3640♦*†	6.53	(0.61)	22 9/16"	(573)	41 5/8"	(1057)	9.56	(0.89)	10.03	(0.93)	38 1/16"	(967)	13.54	(1.26)
ACW3644♦*†	7.15	(0.66)	22 9/16"	(573)	45 5/8"	(1159)	10.52	(0.98)	10.99	(1.02)	34 1/16"	(865)	14.68	(1.36)
ACW3648♦*†	7.78	(0.72)	22 9/16"	(573)	49 5/8"	(1260)	11.49	(1.07)	11.96	(1.11)	30 1/16"	(763)	15.83	(1.47)
ACW3650♦*†	8.41	(0.78)	22 9/16"	(573)	53 5/8"	(1362)	12.45	(1.16)	12.92	(1.20)	26 1/16"	(662)	16.97	(1.58)
ACW3654♦*†	9.03	(0.84)	22 9/16"	(573)	57 5/8"	(1464)	13.41	(1.25)	13.89	(1.29)	22 1/16"	(560)	18.12	(1.68)
ACW3658♦*†	9.66	(0.90)	22 9/16"	(573)	61 5/8"	(1565)	14.37	(1.34)	14.85	(1.38)	18 1/16"	(459)	19.26	(1.79)
ACW3660♦*†	10.29	(0.96)	22 9/16"	(573)	65 5/8"	(1667)	15.33	(1.42)	15.81	(1.47)	14 1/16"	(357)	20.41	(1.90)
ACW3664♦*†	10.92	(1.01)	22 9/16"	(573)	69 5/8"	(1768)	16.29	(1.51)	16.78	(1.56)	10 1/16"	(256)	21.56	(2.00)
ACW3668♦*†	11.54	(1.07)	22 9/16"	(573)	73 5/8"	(1870)	17.25	(1.60)	17.74	(1.65)	6 1/16"	(154)	22.70	(2.11)
ACW3670♦*†	12.17	(1.13)	22 9/16"	(573)	77 5/8"	(1972)	18.21	(1.69)	18.71	(1.74)	15 9/16"	(395)	23.85	(2.22)
ACW3674♦*††	12.80	(1.19)	22 9/16"	(573)	81 5/8"	(2073)	19.17	(1.78)	19.67	(1.83)	11 9/16"	(294)	24.99	(2.32)
ACW3678♦*††	13.43	(1.25)	22 9/16"	(573)	85 5/8"	(2175)	20.14	(1.87)	20.64	(1.92)	7 9/16"	(192)	26.14	(2.43)
ACW3680♦*††	14.05	(1.31)	22 9/16"	(573)	89 5/8"	(2276)	21.10	(1.96)	21.60	(2.01)	3 9/16"	(90)	27.29	(2.54)
ACW3834*††	5.18	(0.48)	22 1/4"	(565)	33 5/8"	(853)	8.08	(0.75)	8.57	(0.80)	46 1/16"	(1170)	11.79	(1.10)
ACW3838♦*††	5.80	(0.54)	22 1/4"	(565)	37 5/8"	(955)	9.10	(0.85)	9.59	(0.89)	42 1/16"	(1068)	12.99	(1.21)
ACW3840♦*††	6.42	(0.60)	22 1/4"	(565)	41 5/8"	(1057)	10.12	(0.94)	10.61	(0.99)	38 1/16"	(967)	14.19	(1.32)
ACW3844♦*††	7.04	(0.65)	22 1/4"	(565)	45 5/8"	(1159)	11.13	(1.03)	11.63	(1.08)	34 1/16"	(865)	15.39	(1.43)
ACW3848♦*††	7.65	(0.71)	22 1/4"	(565)	49 5/8"	(1260)	12.15	(1.13)	12.65	(1.18)	30 1/16"	(763)	16.59	(1.54)
ACW3850♦*††	8.27	(0.77)	22 1/4"	(565)	53 5/8"	(1362)	13.17	(1.22)	13.67	(1.27)	26 1/16"	(662)	17.80	(1.65)
ACW3854♦*††	8.89	(0.83)	22 1/4"	(565)	57 5/8"	(1464)	14.18	(1.32)	14.69	(1.36)	22 1/16"	(560)	19.00	(1.77)
ACW3858♦*††	9.50	(0.88)	22 1/4"	(565)	61 5/8"	(1565)	15.20	(1.41)	15.71	(1.46)	18 1/16"	(459)	20.20	(1.88)
ACW3860♦*†	10.12	(0.94)	22 1/4"	(565)	65 5/8"	(1667)	16.22	(1.51)	16.73	(1.55)	14 1/16"	(357)	21.40	(1.99)
ACW3864♦*†	10.74	(1.00)	22 1/4"	(565)	69 5/8"	(1768)	17.23	(1.60)	17.75	(1.65)	10 1/16"	(256)	22.60	(2.10)
ACW3868♦*†	11.36	(1.06)	22 1/4"	(565)	73 5/8"	(1870)	18.25	(1.70)	18.76	(1.74)	6 1/16"	(154)	23.80	(2.21)
ACW3870♦*†	11.97	(1.11)	22 1/4"	(565)	77 5/8"	(1972)	19.27	(1.79)	19.78	(1.84)	15 9/16"	(395)	25.00	(2.32)

• "Top of Subfloor to Top of Inside Sill Stop" is calculated based upon a structural header height of 6'-10 1/2" (2096).
• Dimensions in parentheses are in millimeters or square meters.
♦Meets or exceeds clear opening area of 5.7 sq. ft. or 0.53 m², clear opening width of 20" (508) and clear opening height of 24" (610) with a limited
*Hinged for widest clear opening (straight-arm operator). All other sizes have hinge with wash mode (split-arm operator).
†Not available with triple-pane annealed glass.
††Not available with triple-pane annealed or tempered glass.

continued on next page

Casement Window Opening and Area Specifications *(continued)*

Window Number	Clear Opening Area Sq. Ft./(m²)		Clear Opening in Full Open Position Width Inches/(mm)		Clear Opening in Full Open Position Height Inches/(mm)		Glass Area Sq. Ft./(m²)		Vent Area Sq. Ft./(m²)		Top of Subfloor to Top of Inside Sill Stop Inches/(mm)		Overall Window Area Sq. Ft./(m²)	
ACW3874 ♦*††	12.59	(1.17)	22 1/4"	(565)	81 5/8"	(2073)	20.28	(1.88)	20.80	(1.93)	11 9/16"	(294)	26.21	(2.43)
ACW3878 ♦*††	13.21	(1.23)	22 1/4"	(565)	85 5/8"	(2175)	21.30	(1.98)	21.82	(2.03)	7 9/16"	(192)	27.41	(2.55)
ACW3880 ♦*††	13.82	(1.28)	22 1/4"	(565)	89 5/8"	(2276)	22.32	(2.07)	22.84	(2.12)	3 9/16"	(90)	28.61	(2.66)
ACW31038 ♦*††	5.68	(0.53)	21 3/4"	(552)	37 5/8"	(955)	9.60	(0.89)	10.11	(0.94)	42 1/16"	(1068)	13.59	(1.26)
ACW31040 ♦*††	6.28	(0.58)	21 3/4"	(552)	41 5/8"	(1057)	10.67	(0.99)	11.18	(1.04)	38 1/16"	(967)	14.85	(1.38)
ACW31044 ♦*††	6.89	(0.64)	21 3/4"	(552)	45 5/8"	(1159)	11.74	(1.09)	12.26	(1.14)	34 1/16"	(865)	16.10	(1.50)
ACW31048 ♦*††	7.49	(0.70)	21 3/4"	(552)	49 5/8"	(1260)	12.81	(1.19)	13.33	(1.24)	30 1/16"	(763)	17.36	(1.61)
ACW31050 ♦*††	8.09	(0.75)	21 3/4"	(552)	53 5/8"	(1362)	13.89	(1.29)	14.41	(1.34)	26 1/16"	(662)	18.62	(1.73)
ACW31054 ♦*††	8.70	(0.81)	21 3/4"	(552)	57 5/8"	(1464)	14.96	(1.39)	15.49	(1.44)	22 1/16"	(560)	19.88	(1.85)
ACW31058 ♦*††	9.30	(0.86)	21 3/4"	(552)	61 5/8"	(1565)	16.03	(1.49)	16.56	(1.54)	18 1/16"	(459)	21.13	(1.96)
ACW31060 ♦*†	9.91	(0.92)	21 3/4"	(552)	65 5/8"	(1667)	17.10	(1.59)	17.64	(1.64)	14 1/16"	(357)	22.39	(2.08)
ACW31064 ♦*†	10.51	(0.98)	21 3/4"	(552)	69 5/8"	(1768)	18.17	(1.69)	18.71	(1.74)	10 1/16"	(256)	23.65	(2.20)
ACW31068 ♦*†	11.11	(1.03)	21 3/4"	(552)	73 5/8"	(1870)	19.25	(1.79)	19.79	(1.84)	6 1/16"	(154)	24.90	(2.31)
ACW31070 ♦*†	11.72	(1.09)	21 3/4"	(552)	77 5/8"	(1972)	20.32	(1.89)	20.86	(1.94)	15 9/16"	(395)	26.16	(2.43)
ACW31074 ♦*††	12.32	(1.14)	21 3/4"	(552)	81 5/8"	(2073)	21.39	(1.99)	21.94	(2.04)	11 9/16"	(294)	27.42	(2.55)
ACW31078 ♦*††	12.93	(1.20)	21 3/4"	(552)	85 5/8"	(2175)	22.46	(2.09)	23.01	(2.14)	7 9/16"	(192)	28.67	(2.66)
ACW31080 ♦*††	13.53	(1.26)	21 3/4"	(552)	89 5/8"	(2276)	23.54	(2.19)	24.09	(2.24)	3 9/16"	(90)	29.93	(2.78)
ACW4038 ♦*††	5.53	(0.51)	21 3/16"	(538)	37 5/8"	(955)	10.09	(0.94)	10.63	(0.99)	42 1/16"	(1068)	14.19	(1.32)
ACW4040 ♦*††	6.12	(0.57)	21 3/16"	(538)	41 5/8"	(1057)	11.22	(1.04)	11.76	(1.09)	38 1/16"	(967)	15.50	(1.44)
ACW4044 ♦*††	6.71	(0.62)	21 3/16"	(538)	45 5/8"	(1159)	12.35	(1.15)	12.89	(1.20)	34 1/16"	(865)	16.82	(1.56)
ACW4048 ♦*††	7.30	(0.68)	21 3/16"	(538)	49 5/8"	(1260)	13.48	(1.25)	14.02	(1.30)	30 1/16"	(763)	18.13	(1.68)
ACW4050 ♦*††	7.89	(0.73)	21 3/16"	(538)	53 5/8"	(1362)	14.60	(1.36)	15.15	(1.41)	26 1/16"	(662)	19.44	(1.81)
ACW4054 ♦*††	8.48	(0.79)	21 3/16"	(538)	57 5/8"	(1464)	15.73	(1.46)	16.29	(1.51)	22 1/16"	(560)	20.75	(1.93)
ACW4058 ♦*††	9.07	(0.84)	21 3/16"	(538)	61 5/8"	(1565)	16.86	(1.57)	17.42	(1.62)	18 1/16"	(459)	22.07	(2.05)
ACW4060 ♦*†	9.66	(0.90)	21 3/16"	(538)	65 5/8"	(1667)	17.99	(1.67)	18.55	(1.72)	14 1/16"	(357)	23.38	(2.17)
ACW4064 ♦*†	10.24	(0.95)	21 3/16"	(538)	69 5/8"	(1768)	19.12	(1.78)	19.68	(1.83)	10 1/16"	(256)	24.69	(2.29)
ACW4068 ♦*†	10.83	(1.01)	21 3/16"	(538)	73 5/8"	(1870)	20.24	(1.88)	20.81	(1.93)	6 1/16"	(154)	26.00	(2.42)
ACW4070 ♦*†	11.42	(1.06)	21 3/16"	(538)	77 5/8"	(1972)	21.37	(1.99)	21.94	(2.04)	15 9/16"	(395)	27.32	(2.54)
ACW4074 ♦*††	12.01	(1.12)	21 3/16"	(538)	81 5/8"	(2073)	22.50	(2.09)	23.07	(2.14)	11 9/16"	(294)	28.63	(2.66)
ACW4078 ♦*††	12.60	(1.17)	21 3/16"	(538)	85 5/8"	(2175)	23.63	(2.20)	24.20	(2.25)	7 9/16"	(192)	29.94	(2.78)
ACW4080 ♦*††	13.19	(1.23)	21 3/16"	(538)	89 5/8"	(2276)	24.75	(2.30)	25.33	(2.35)	3 9/16"	(90)	31.25	(2.90)

- "Top of Subfloor to Top of Inside Sill Stop" is calculated based upon a structural header height of 6'-10 1/2" (2096).
- Dimensions in parentheses are in millimeters or square meters.

♦Meets or exceeds clear opening area of 5.7 sq. ft. or 0.53 m², clear opening width of 20" (508) and clear opening height of 24" (610) with a limited sash opening.

*Hinged for widest clear opening (straight-arm operator). All other sizes have hinge with wash mode (split-arm operator).

†Not available with triple-pane annealed glass.

††Not available with triple-pane annealed or tempered glass.

Casement Window Details

Scale 1 1/2" (38) = 1'-0" (305) – 1:8

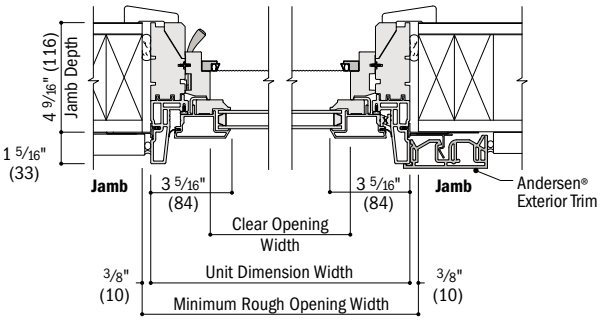

Horizontal Section

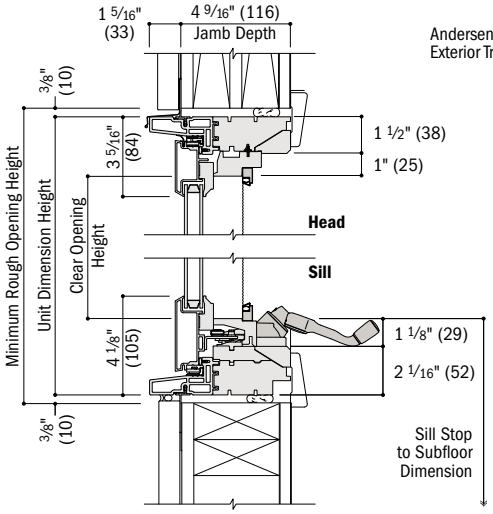

Vertical Section

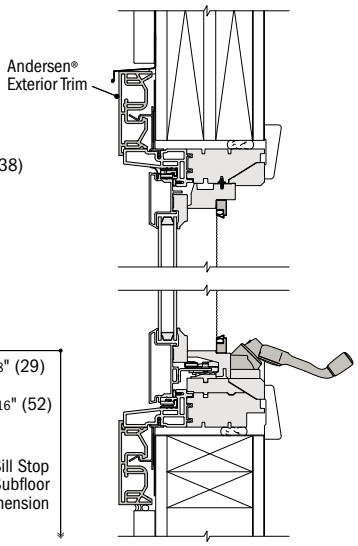

Vertical Section

See pages 60-62 for joining details.

- 4 9/16" (116) base jamb depth measurement is from back side of installation flange.
- Light-colored areas are parts included with window. Dark-colored areas are additional Andersen® parts required to complete window assembly as shown.
- Dimensions in parentheses are in millimeters.
- **Minimum rough openings may need to be increased to allow for use of building wraps, flashing, sill panning, brackets, fasteners or other items. See installation information on pages 226-227.**
- Details are for illustration only and are not intended to represent product installation methods or materials. Refer to product installation instructions at andersenwindows.com.

Table of Awning Window Sizes

Scale 1/8" (3) = 1'-0" (305) – 1:96

Window Dimension	1'-7 1/4" (489)	1'-11 1/4" (591)	2'-3 1/4" (692)	2'-5 1/4" (743)	2'-7 1/4" (794)	2'-9 1/4" (845)	2'-11 1/4" (895)	3'-1 1/4" (946)	3'-3 1/4" (997)	3'-7 1/4" (1099)	3'-11 1/4" (1200)	4'-3 1/4" (1302)
Minimum Rough Opening	1'-8" (508)	2'-0" (610)	2'-4" (711)	2'-6" (762)	2'-8" (813)	2'-10" (864)	3'-0" (914)	3'-2" (965)	3'-4" (1016)	3'-8" (1118)	4'-0" (1219)	4'-4" (1321)
Unobstructed Glass	12 5/8" (320)	16 5/8" (422)	20 5/8" (523)	22 5/8" (574)	24 5/8" (625)	26 5/8" (676)	28 5/8" (726)	30 5/8" (777)	32 5/8" (828)	36 5/8" (930)	40 5/8" (1031)	44 5/8" (1133)

CUSTOM SIZES AVAILABLE

1'-3 1/4" (387) 1'-4" (406) 7 13/16" (198)	AAN1814	AAN2014	AAN2414	AAN2614	AAN2814	AAN21014	AAN3014	AAN3214	AAN3414	AAN3814	AAN4014	AAN4414
1'-7 1/4" (489) 1'-8" (508) 11 13/16" (300)	AAN1818	AAN2018	AAN2418	AAN2618	AAN2818	AAN21018	AAN3018	AAN3218	AAN3418	AAN3818	AAN4018	AAN4418
1'-9 1/4" (540) 1'-10" (559) 13 13/16" (351)	AAN18110	AAN20110	AAN24110	AAN26110	AAN28110	AAN210110	AAN30110	AAN32110	AAN34110	AAN38110	AAN40110	AAN44110
1'-11 1/4" (591) 2'-0" (610) 15 13/16" (401)	AAN1820	AAN2020	AAN2420	AAN2620	AAN2820	AAN21020	AAN3020	AAN3220	AAN3420	AAN3820	AAN4020	AAN4420
2'-3 1/4" (692) 2'-4" (711) 19 13/16" (503)	AAN1824	AAN2024	AAN2424	AAN2624	AAN2824	AAN21024	AAN3024	AAN3224	AAN3424	AAN3824	AAN4024	AAN4424
2'-7 1/4" (794) 2'-8" (813) 23 13/16" (605)	AAN1828	AAN2028	AAN2428	AAN2628	AAN2828	AAN21028	AAN3028	AAN3228	AAN3428	AAN3828	AAN4028	AAN4428
2'-11 1/4" (895) 3'-0" (914) 27 13/16" (706)	AAN1830*	AAN2030*	AAN2430*	AAN2630*	AAN2830*	AAN21030*	AAN3030*	AAN3230*	AAN3430*	AAN3830*	AAN4030*	AAN4430*
3'-3 1/4" (997) 3'-4" (1016) 31 13/16" (808)	AAN1834*†	AAN2034*†	AAN2434*†	AAN2634*†	AAN2834*†	AAN21034*†	AAN3034*†	AAN3234*†	AAN3434*†	AAN3834*†	AAN4034*†	AAN4434*†
3'-7 1/4" (1099) 3'-8" (1118) 35 13/16" (909)	AAN1838*†	AAN2038*†	AAN2438*†	AAN2638*†	AAN2838*†	AAN21038*†	AAN3038*†	AAN3238*†	AAN3438*†	AAN3838*††	AAN4038*††	AAN4438*††
3'-11 1/4" (1200) 4'-0" (1219) 39 13/16" (1011)	AAN1840*†	AAN2040*†	AAN2440*†	AAN2640*†	AAN2840*†	AAN21040*†	AAN3040*†	AAN3240*†	AAN3440*†	AAN3840*††	AAN4040*††	AAN4440*††

Custom-size windows are available in 1/8" (3) increments. See page 63 for custom sizes and specifications.

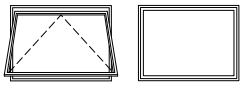

Venting Stationary

Choose venting or stationary.

Most sizes shown are available with PG upgrade.‡

Awning window must be installed to vent as shown, and should not be rotated and used as a hopper.

Grille patterns and details shown on page 37.

• "Window Dimension" always refers to outside frame-to-frame dimension.
• "**Minimum Rough Opening**" **dimensions may need to be increased to allow for use of building wraps, flashing, sill panning, brackets, fasteners or other items. See pages 226-227 for more details.**
• Dimensions in parentheses are in millimeters.
*Tandem locks are standard.
‡PG upgrade is not available for venting sizes shown with an underscore on page 33 (i.e. **ACW**5830).
†Not available with triple-pane annealed glass.
††Not available with triple-pane annealed or tempered glass.

4'-7 1/4" (1403)	4'-11 1/4" (1505)	5'-3 1/4" (1607)	5'-7 1/4" (1708)	5'-11 1/4" (1810)
4'-8" (1422)	5'-0" (1524)	5'-4" (1626)	5'-8" (1727)	6'-0" (1829)
48 5/8" (1234)	52 5/8" (1336)	56 5/8" (1438)	60 5/8" (1539)	64 5/8" (1641)
AAN4814	**AAN**5014	**AAN**5414	**AAN**5814	**AAN**6014
AAN4818	**AAN**5018	**AAN**5418	**AAN**5818	**AAN**6018
AAN48110	**AAN**50110	**AAN**54110	**AAN**58110	**AAN**60110
AAN4820	**AAN**5020	**AAN**5420	**AAN**5820	**AAN**6020
AAN4824	**AAN**5024	**AAN**5424	**AAN**5824	**AAN**6024
AAN4828	**AAN**5028	**AAN**5428	**AAN**5828	**AAN**6028
AAN4830*	**AAN**5030*	**AAN**5430*	**AAN**5830*	**AAN**6030*
AAN4834*†	**AAN**5034*†	**AAN**5434*†	**AAN**5834*†	**AAN**6034*†
AAN4838*††	**AAN**5038*††	**AAN**5438*††	**AAN**5838*††	**AAN**6038*††
AAN4840*††	**AAN**5040*††	**AAN**5440*††	**AAN**5840*††	**AAN**6040*††

Custom-size windows are available in 1/8" (3) increments.

See page 63 for custom sizes and specifications.

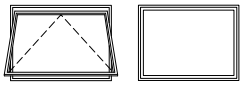

Venting Stationary

Choose venting or stationary.

Most sizes shown are available with PG upgrade.‡

Awning window must be installed to vent as shown, and should not be rotated and used as a hopper.

Grille patterns and details shown on page 37.

• "Window Dimension" always refers to outside frame-to-frame dimension.
• "**Minimum Rough Opening**" **dimensions may need to be increased to allow for use of building wraps, flashing, sill panning, brackets, fasteners or other items. See pages 226-227 for more details.**
• Dimensions in parentheses are in millimeters.
‡PG upgrade is not available for venting sizes shown with an underscore (i.e. **ACW**5830).
*Tandem locks are standard.
†Not available with triple-pane annealed glass.
††Not available with triple-pane annealed or tempered glass.

Awning Window Opening and Area Specifications

Window Number	Clear Opening Area Sq. Ft./(m²)	Clear Opening in Full Open Position Width Inches/(mm)	Clear Opening in Full Open Position Depth Inches/(mm)	Glass Area Sq. Ft./(m²)	Vent Area Sq. Ft./(m²)	Top of Subfloor to Top of Inside Sill Stop Inches/(mm)	Overall Window Area Sq. Ft./(m²)
AAN1814	0.59 (0.05)	14 5/16" (364)	5 7/8" (150)	0.68 (0.06)	0.59 (0.05)	70 1/16" (1779)	2.04 (0.19)
AAN1818	0.59 (0.05)	14 5/16" (364)	5 7/8" (150)	1.03 (0.10)	0.59 (0.05)	66 1/16" (1678)	2.57 (0.24)
AAN18110	0.59 (0.05)	14 5/16" (364)	5 7/8" (150)	1.21 (0.11)	0.59 (0.05)	64 1/16" (1627)	2.84 (0.26)
AAN1820	0.59 (0.05)	14 5/16" (364)	5 7/8" (150)	1.38 (0.13)	0.59 (0.05)	62 1/16" (1576)	3.11 (0.29)
AAN1824	0.59 (0.05)	14 5/16" (364)	5 7/8" (150)	1.73 (0.16)	0.59 (0.05)	58 1/16" (1475)	3.64 (0.34)
AAN1828	0.59 (0.05)	14 5/16" (364)	5 7/8" (150)	2.08 (0.19)	0.59 (0.05)	54 1/16" (1373)	4.18 (0.39)
AAN1830	0.59 (0.05)	14 5/16" (364)	5 7/8" (150)	2.43 (0.23)	0.59 (0.05)	50 1/16" (1271)	4.71 (0.44)
AAN1834 †	0.59 (0.05)	14 5/16" (364)	5 7/8" (150)	2.78 (0.26)	0.59 (0.05)	46 1/16" (1170)	5.25 (0.49)
AAN1838 †	0.59 (0.05)	14 5/16" (364)	5 7/8" (150)	3.13 (0.29)	0.59 (0.05)	42 1/16" (1068)	5.78 (0.54)
AAN1840 †	0.59 (0.05)	14 5/16" (364)	5 7/8" (150)	3.48 (0.32)	0.59 (0.05)	38 1/16" (967)	6.32 (0.59)
AAN2014	0.75 (0.07)	18 5/16" (465)	5 7/8" (150)	0.90 (0.08)	0.75 (0.07)	70 1/16" (1779)	2.46 (0.23)
AAN2018	0.75 (0.07)	18 5/16" (465)	5 7/8" (150)	1.36 (0.13)	0.75 (0.07)	66 1/16" (1678)	3.11 (0.29)
AAN20110	0.75 (0.07)	18 5/16" (465)	5 7/8" (150)	1.59 (0.15)	0.75 (0.07)	64 1/16" (1627)	3.43 (0.32)
AAN2020	0.75 (0.07)	18 5/16" (465)	5 7/8" (150)	1.82 (0.17)	0.75 (0.07)	62 1/16" (1576)	3.75 (0.35)
AAN2024	0.75 (0.07)	18 5/16" (465)	5 7/8" (150)	2.28 (0.21)	0.75 (0.07)	58 1/16" (1475)	4.40 (0.41)
AAN2028	0.75 (0.07)	18 5/16" (465)	5 7/8" (150)	2.74 (0.25)	0.75 (0.07)	54 1/16" (1373)	5.05 (0.47)
AAN2030	0.75 (0.07)	18 5/16" (465)	5 7/8" (150)	3.21 (0.30)	0.75 (0.07)	50 1/16" (1271)	5.69 (0.53)
AAN2034 †	0.75 (0.07)	18 5/16" (465)	5 7/8" (150)	3.67 (0.34)	0.75 (0.07)	46 1/16" (1170)	6.34 (0.59)
AAN2038 †	0.75 (0.07)	18 5/16" (465)	5 7/8" (150)	4.13 (0.38)	0.75 (0.07)	42 1/16" (1068)	6.98 (0.65)
AAN2040 †	0.75 (0.07)	18 5/16" (465)	5 7/8" (150)	4.59 (0.43)	0.75 (0.07)	38 1/16" (967)	7.63 (0.71)
AAN2414	0.91 (0.08)	22 5/16" (567)	5 7/8" (150)	1.12 (0.10)	0.91 (0.08)	70 1/16" (1779)	2.89 (0.27)
AAN2418	0.91 (0.08)	22 5/16" (567)	5 7/8" (150)	1.69 (0.16)	0.91 (0.08)	66 1/16" (1678)	3.64 (0.34)
AAN24110	0.91 (0.08)	22 5/16" (567)	5 7/8" (150)	1.97 (0.18)	0.91 (0.08)	64 1/16" (1627)	4.02 (0.37)
AAN2420	0.91 (0.08)	22 5/16" (567)	5 7/8" (150)	2.26 (0.21)	0.91 (0.08)	62 1/16" (1576)	4.40 (0.41)
AAN2424	0.91 (0.08)	22 5/16" (567)	5 7/8" (150)	2.83 (0.26)	0.91 (0.08)	58 1/16" (1475)	5.16 (0.48)
AAN2428	0.91 (0.08)	22 5/16" (567)	5 7/8" (150)	3.41 (0.32)	0.91 (0.08)	54 1/16" (1373)	5.91 (0.55)
AAN2430	0.91 (0.08)	22 5/16" (567)	5 7/8" (150)	3.98 (0.37)	0.91 (0.08)	50 1/16" (1271)	6.67 (0.62)
AAN2434 †	0.91 (0.08)	22 5/16" (567)	5 7/8" (150)	4.55 (0.42)	0.91 (0.08)	46 1/16" (1170)	7.43 (0.69)
AAN2438 †	0.91 (0.08)	22 5/16" (567)	5 7/8" (150)	5.12 (0.48)	0.91 (0.08)	42 1/16" (1068)	8.18 (0.76)
AAN2440 †	0.91 (0.08)	22 5/16" (567)	5 7/8" (150)	5.69 (0.53)	0.91 (0.08)	38 1/16" (967)	8.94 (0.83)
AAN2614	0.99 (0.09)	24 5/16" (618)	5 7/8" (150)	1.22 (0.11)	0.99 (0.09)	70 1/16" (1779)	3.10 (0.29)
AAN2618	0.99 (0.09)	24 5/16" (618)	5 7/8" (150)	1.85 (0.17)	0.99 (0.09)	66 1/16" (1678)	3.91 (0.36)
AAN26110	0.99 (0.09)	24 5/16" (618)	5 7/8" (150)	2.17 (0.20)	0.99 (0.09)	64 1/16" (1627)	4.32 (0.40)
AAN2620	0.99 (0.09)	24 5/16" (618)	5 7/8" (150)	2.48 (0.23)	0.99 (0.09)	62 1/16" (1576)	4.72 (0.44)
AAN2624	0.99 (0.09)	24 5/16" (618)	5 7/8" (150)	3.11 (0.29)	0.99 (0.09)	58 1/16" (1475)	5.54 (0.51)
AAN2628	0.99 (0.09)	24 5/16" (618)	5 7/8" (150)	3.75 (0.35)	0.99 (0.09)	54 1/16" (1373)	6.35 (0.59)
AAN2630	0.99 (0.09)	24 5/16" (618)	5 7/8" (150)	4.36 (0.41)	0.99 (0.09)	50 1/16" (1271)	7.16 (0.67)
AAN2634 †	0.99 (0.09)	24 5/16" (618)	5 7/8" (150)	4.99 (0.46)	0.99 (0.09)	46 1/16" (1170)	7.97 (0.74)
AAN2638 †	0.99 (0.09)	24 5/16" (618)	5 7/8" (150)	5.62 (0.52)	0.99 (0.09)	42 1/16" (1068)	8.79 (0.82)
AAN2640 †	0.99 (0.09)	24 5/16" (618)	5 7/8" (150)	6.25 (0.58)	0.99 (0.09)	38 1/16" (967)	9.60 (0.89)
AAN2814	1.08 (0.10)	26 5/16" (668)	5 7/8" (150)	1.33 (0.12)	1.08 (0.10)	70 1/16" (1779)	3.31 (0.31)
AAN2818	1.08 (0.10)	26 5/16" (668)	5 7/8" (150)	2.02 (0.19)	1.08 (0.10)	66 1/16" (1678)	4.18 (0.39)
AAN28110	1.08 (0.10)	26 5/16" (668)	5 7/8" (150)	2.36 (0.22)	1.08 (0.10)	64 1/16" (1627)	4.61 (0.43)
AAN2820	1.08 (0.10)	26 5/16" (668)	5 7/8" (150)	2.70 (0.25)	1.08 (0.10)	62 1/16" (1576)	5.05 (0.47)
AAN2824	1.08 (0.10)	26 5/16" (668)	5 7/8" (150)	3.38 (0.31)	1.08 (0.10)	58 1/16" (1475)	5.91 (0.55)
AAN2828	1.08 (0.10)	26 5/16" (668)	5 7/8" (150)	4.07 (0.38)	1.08 (0.10)	54 1/16" (1373)	6.78 (0.63)
AAN2830	1.08 (0.10)	26 5/16" (668)	5 7/8" (150)	4.75 (0.44)	1.08 (0.10)	50 1/16" (1271)	7.65 (0.71)
AAN2834 †	1.08 (0.10)	26 5/16" (668)	5 7/8" (150)	5.43 (0.50)	1.08 (0.10)	46 1/16" (1170)	8.52 (0.79)
AAN2838 †	1.08 (0.10)	26 5/16" (668)	5 7/8" (150)	6.11 (0.57)	1.08 (0.10)	42 1/16" (1068)	9.39 (0.87)
AAN2840 †	1.08 (0.10)	26 5/16" (668)	5 7/8" (150)	6.80 (0.63)	1.08 (0.10)	38 1/16" (967)	10.25 (0.95)
AAN21014	1.16 (0.11)	28 5/16" (719)	5 7/8" (150)	1.44 (0.13)	1.16 (0.11)	70 1/16" (1779)	3.52 (0.33)
AAN21018	1.16 (0.11)	28 5/16" (719)	5 7/8" (150)	2.18 (0.20)	1.16 (0.11)	66 1/16" (1678)	4.45 (0.41)
AAN210110	1.16 (0.11)	28 5/16" (719)	5 7/8" (150)	2.55 (0.24)	1.16 (0.11)	64 1/16" (1627)	4.91 (0.46)
AAN21020	1.16 (0.11)	28 5/16" (719)	5 7/8" (150)	2.92 (0.27)	1.16 (0.11)	62 1/16" (1576)	5.37 (0.50)
AAN21024	1.16 (0.11)	28 5/16" (719)	5 7/8" (150)	3.66 (0.34)	1.16 (0.11)	58 1/16" (1475)	6.29 (0.58)
AAN21028	1.16 (0.11)	28 5/16" (719)	5 7/8" (150)	4.40 (0.41)	1.16 (0.11)	54 1/16" (1373)	7.22 (0.67)
AAN21030	1.16 (0.11)	28 5/16" (719)	5 7/8" (150)	5.14 (0.48)	1.16 (0.11)	50 1/16" (1271)	8.14 (0.76)
AAN21034 †	1.16 (0.11)	28 5/16" (719)	5 7/8" (150)	5.87 (0.55)	1.16 (0.11)	46 1/16" (1170)	9.06 (0.84)
AAN21038 †	1.16 (0.11)	28 5/16" (719)	5 7/8" (150)	6.61 (0.61)	1.16 (0.11)	42 1/16" (1068)	9.99 (0.93)

• "Top of Subfloor to Top of Inside Sill Stop" is calculated based upon a structural header height of 6'-10 1/2" (2096).
• Dimensions in parentheses are in millimeters or square meters.
†Not available with triple-pane annealed glass.

continued on next page

Awning Window Opening and Area Specifications *(continued)*

Window Number	Clear Opening Area Sq. Ft./(m²)		Clear Opening in Full Open Position Width Inches/(mm)		Clear Opening in Full Open Position Depth Inches/(mm)		Glass Area Sq. Ft./(m²)		Vent Area Sq. Ft./(m²)		Top of Subfloor to Top of Inside Sill Stop Inches/(mm)		Overall Window Area Sq. Ft./(m²)	
AAN21040†	1.16	(0.11)	28 5/16"	(719)	5 7/8"	(150)	7.35	(0.68)	1.16	(0.11)	38 1/16"	(967)	10.91	(1.01)
AAN3014	1.24	(0.12)	30 5/16"	(770)	5 7/8"	(150)	1.55	(0.14)	1.24	(0.12)	70 1/16"	(1779)	3.73	(0.35)
AAN3018	1.24	(0.12)	30 5/16"	(770)	5 7/8"	(150)	2.34	(0.22)	1.24	(0.12)	66 1/16"	(1678)	4.71	(0.44)
AAN30110	1.24	(0.12)	30 5/16"	(770)	5 7/8"	(150)	2.74	(0.25)	1.24	(0.12)	64 1/16"	(1627)	5.20	(0.48)
AAN3020	1.24	(0.12)	30 5/16"	(770)	5 7/8"	(150)	3.14	(0.29)	1.24	(0.12)	62 1/16"	(1576)	5.69	(0.53)
AAN3024	1.24	(0.12)	30 5/16"	(770)	5 7/8"	(150)	3.93	(0.37)	1.24	(0.12)	58 1/16"	(1475)	6.67	(0.62)
AAN3028	1.24	(0.12)	30 5/16"	(770)	5 7/8"	(150)	4.73	(0.44)	1.24	(0.12)	54 1/16"	(1373)	7.56	(0.70)
AAN3030	1.24	(0.12)	30 5/16"	(770)	5 7/8"	(150)	5.52	(0.51)	1.24	(0.12)	50 1/16"	(1271)	8.63	(0.80)
AAN3034†	1.24	(0.12)	30 5/16"	(770)	5 7/8"	(150)	6.32	(0.59)	1.24	(0.12)	46 1/16"	(1170)	9.61	(0.89)
AAN3038†	1.24	(0.12)	30 5/16"	(770)	5 7/8"	(150)	7.11	(0.66)	1.24	(0.12)	42 1/16"	(1068)	10.59	(0.98)
AAN3040†	1.24	(0.12)	30 5/16"	(770)	5 7/8"	(150)	7.90	(0.73)	1.24	(0.12)	38 1/16"	(967)	11.57	(1.07)
AAN3214	1.32	(0.12)	32 5/16"	(821)	5 7/8"	(150)	1.66	(0.15)	1.32	(0.12)	70 1/16"	(1779)	3.95	(0.37)
AAN3218	1.32	(0.12)	32 5/16"	(821)	5 7/8"	(150)	2.51	(0.23)	1.32	(0.12)	66 1/16"	(1678)	4.98	(0.46)
AAN32110	1.32	(0.12)	32 5/16"	(821)	5 7/8"	(150)	2.93	(0.27)	1.32	(0.12)	64 1/16"	(1627)	5.50	(0.51)
AAN3220	1.32	(0.12)	32 5/16"	(821)	5 7/8"	(150)	3.36	(0.31)	1.32	(0.12)	62 1/16"	(1576)	6.01	(0.56)
AAN3224	1.32	(0.12)	32 5/16"	(821)	5 7/8"	(150)	4.21	(0.39)	1.32	(0.12)	58 1/16"	(1475)	7.05	(0.65)
AAN3228	1.32	(0.12)	32 5/16"	(821)	5 7/8"	(150)	5.06	(0.47)	1.32	(0.12)	54 1/16"	(1373)	8.08	(0.75)
AAN3230	1.32	(0.12)	32 5/16"	(821)	5 7/8"	(150)	5.91	(0.55)	1.32	(0.12)	50 1/16"	(1271)	9.12	(0.85)
AAN3234†	1.32	(0.12)	32 5/16"	(821)	5 7/8"	(150)	6.76	(0.63)	1.32	(0.12)	46 1/16"	(1170)	10.15	(0.94)
AAN3238†	1.32	(0.12)	32 5/16"	(821)	5 7/8"	(150)	7.61	(0.71)	1.32	(0.12)	42 1/16"	(1068)	11.19	(1.04)
AAN3240†	1.32	(0.12)	32 5/16"	(821)	5 7/8"	(150)	8.46	(0.79)	1.32	(0.12)	38 1/16"	(967)	12.22	(1.14)
AAN3414	1.40	(0.13)	34 5/16"	(872)	5 7/8"	(150)	1.77	(0.16)	1.40	(0.13)	70 1/16"	(1779)	4.16	(0.39)
AAN3418	1.40	(0.13)	34 5/16"	(872)	5 7/8"	(150)	2.67	(0.25)	1.40	(0.13)	66 1/16"	(1678)	5.25	(0.49)
AAN34110	1.40	(0.13)	34 5/16"	(872)	5 7/8"	(150)	3.12	(0.29)	1.40	(0.13)	64 1/16"	(1627)	5.79	(0.54)
AAN3420	1.40	(0.13)	34 5/16"	(872)	5 7/8"	(150)	3.58	(0.33)	1.40	(0.13)	62 1/16"	(1576)	6.34	(0.59)
AAN3424	1.40	(0.13)	34 5/16"	(872)	5 7/8"	(150)	4.48	(0.42)	1.40	(0.13)	58 1/16"	(1475)	7.43	(0.69)
AAN3428	1.40	(0.13)	34 5/16"	(872)	5 7/8"	(150)	5.39	(0.50)	1.40	(0.13)	54 1/16"	(1373)	8.52	(0.79)
AAN3430	1.40	(0.13)	34 5/16"	(872)	5 7/8"	(150)	6.29	(0.58)	1.40	(0.13)	50 1/16"	(1271)	9.61	(0.89)
AAN3434†	1.40	(0.13)	34 5/16"	(872)	5 7/8"	(150)	7.20	(0.67)	1.40	(0.13)	46 1/16"	(1170)	10.70	(0.99)
AAN3438†	1.40	(0.13)	34 5/16"	(872)	5 7/8"	(150)	8.10	(0.75)	1.40	(0.13)	42 1/16"	(1068)	11.79	(1.10)
AAN3440†	1.40	(0.13)	34 5/16"	(872)	5 7/8"	(150)	9.01	(0.84)	1.40	(0.13)	38 1/16"	(967)	12.88	(1.20)
AAN3814	1.57	(0.15)	38 5/16"	(973)	5 7/8"	(150)	1.98	(0.18)	1.57	(0.15)	70 1/16"	(1779)	4.58	(0.43)
AAN3818	1.57	(0.15)	38 5/16"	(973)	5 7/8"	(150)	3.00	(0.28)	1.57	(0.15)	66 1/16"	(1678)	5.78	(0.54)
AAN38110	1.57	(0.15)	38 5/16"	(973)	5 7/8"	(150)	3.51	(0.33)	1.57	(0.15)	64 1/16"	(1627)	6.38	(0.59)
AAN3820	1.57	(0.15)	38 5/16"	(973)	5 7/8"	(150)	4.02	(0.37)	1.57	(0.15)	62 1/16"	(1576)	6.98	(0.65)
AAN3824	1.57	(0.15)	38 5/16"	(973)	5 7/8"	(150)	5.03	(0.47)	1.57	(0.15)	58 1/16"	(1475)	8.18	(0.76)
AAN3828	1.57	(0.15)	38 5/16"	(973)	5 7/8"	(150)	6.05	(0.56)	1.57	(0.15)	54 1/16"	(1373)	9.39	(0.87)
AAN3830	1.57	(0.15)	38 5/16"	(973)	5 7/8"	(150)	7.07	(0.66)	1.57	(0.15)	50 1/16"	(1271)	10.59	(0.98)
AAN3834†	1.57	(0.15)	38 5/16"	(973)	5 7/8"	(150)	8.08	(0.75)	1.57	(0.15)	46 1/16"	(1170)	11.79	(1.10)
AAN3838††	1.57	(0.15)	38 5/16"	(973)	5 7/8"	(150)	9.10	(0.85)	1.57	(0.15)	42 1/16"	(1068)	12.99	(1.21)
AAN3840††	1.57	(0.15)	38 5/16"	(973)	5 7/8"	(150)	10.12	(0.94)	1.57	(0.15)	38 1/16"	(967)	14.19	(1.32)
AAN4014	1.73	(0.16)	42 5/16"	(1075)	5 7/8"	(150)	2.20	(0.20)	1.73	(0.16)	70 1/16"	(1779)	5.00	(0.46)
AAN4018	1.73	(0.16)	42 5/16"	(1075)	5 7/8"	(150)	3.33	(0.31)	1.73	(0.16)	66 1/16"	(1678)	6.32	(0.59)
AAN40110	1.73	(0.16)	42 5/16"	(1075)	5 7/8"	(150)	3.89	(0.36)	1.73	(0.16)	64 1/16"	(1627)	6.97	(0.65)
AAN4020	1.73	(0.16)	42 5/16"	(1075)	5 7/8"	(150)	4.46	(0.41)	1.73	(0.16)	62 1/16"	(1576)	7.63	(0.71)
AAN4024	1.73	(0.16)	42 5/16"	(1075)	5 7/8"	(150)	5.58	(0.52)	1.73	(0.16)	58 1/16"	(1475)	8.94	(0.83)
AAN4028	1.73	(0.16)	42 5/16"	(1075)	5 7/8"	(150)	6.71	(0.62)	1.73	(0.16)	54 1/16"	(1373)	10.25	(0.95)
AAN4030	1.73	(0.16)	42 5/16"	(1075)	5 7/8"	(150)	7.84	(0.73)	1.73	(0.16)	50 1/16"	(1271)	11.57	(1.07)
AAN4034†	1.73	(0.16)	42 5/16"	(1075)	5 7/8"	(150)	8.97	(0.83)	1.73	(0.16)	46 1/16"	(1170)	12.88	(1.20)
AAN4038††	1.73	(0.16)	42 5/16"	(1075)	5 7/8"	(150)	10.09	(0.94)	1.73	(0.16)	42 1/16"	(1068)	14.19	(1.32)
AAN4040††	1.73	(0.16)	42 5/16"	(1075)	5 7/8"	(150)	11.22	(1.04)	1.73	(0.16)	38 1/16"	(967)	15.50	(1.44)
AAN4414	1.90	(0.18)	46 5/16"	(1176)	5 7/8"	(150)	2.42	(0.22)	1.90	(0.18)	70 1/16"	(1779)	5.43	(0.50)
AAN4418	1.90	(0.18)	46 5/16"	(1176)	5 7/8"	(150)	3.66	(0.34)	1.90	(0.18)	66 1/16"	(1678)	6.85	(0.64)
AAN44110	1.90	(0.18)	46 5/16"	(1176)	5 7/8"	(150)	4.27	(0.40)	1.90	(0.18)	64 1/16"	(1627)	7.56	(0.70)
AAN4420	1.90	(0.18)	46 5/16"	(1176)	5 7/8"	(150)	4.89	(0.45)	1.90	(0.18)	62 1/16"	(1576)	8.28	(0.77)
AAN4424	1.90	(0.18)	46 5/16"	(1176)	5 7/8"	(150)	6.13	(0.57)	1.90	(0.18)	58 1/16"	(1475)	9.70	(0.90)
AAN4428	1.90	(0.18)	46 5/16"	(1176)	5 7/8"	(150)	7.37	(0.68)	1.90	(0.18)	54 1/16"	(1373)	11.12	(1.03)
AAN4430	1.90	(0.18)	46 5/16"	(1176)	5 7/8"	(150)	8.61	(0.80)	1.90	(0.18)	50 1/16"	(1271)	12.55	(1.17)
AAN4434†	1.90	(0.18)	46 5/16"	(1176)	5 7/8"	(150)	9.85	(0.92)	1.90	(0.18)	46 1/16"	(1170)	13.97	(1.30)

• "Top of Subfloor to Top of Inside Sill Stop" is calculated based upon a structural header height of 6'-10 1/2" (2096).
• Dimensions in parentheses are in millimeters or square meters.
†Not available with triple-pane annealed glass.
††Not available with triple-pane annealed or tempered glass.

continued on next page

Awning Window Opening and Area Specifications *(continued)*

Window Number	Clear Opening Area Sq. Ft./(m²)		Clear Opening in Full Open Position Width Inches/(mm)		Depth Inches/(mm)		Glass Area Sq. Ft./(m²)		Vent Area Sq. Ft./(m²)		Top of Subfloor to Top of Inside Sill Stop Inches/(mm)		Overall Window Area Sq. Ft./(m²)	
AAN4438 ††	1.90	(0.18)	46 5/16"	(1176)	5 7/8"	(150)	11.09	(1.03)	1.90	(0.18)	42 1/16"	(1068)	15.39	(1.43)
AAN4440 ††	1.90	(0.18)	46 5/16"	(1176)	5 7/8"	(150)	12.33	(1.15)	1.90	(0.18)	38 1/16"	(967)	16.82	(1.56)
AAN4814	2.06	(0.19)	50 5/16"	(1278)	5 7/8"	(150)	2.63	(0.24)	2.06	(0.19)	70 1/16"	(1779)	5.85	(0.54)
AAN4818	2.06	(0.19)	50 5/16"	(1278)	5 7/8"	(150)	3.98	(0.37)	2.06	(0.19)	66 1/16"	(1678)	7.39	(0.69)
AAN48110	2.06	(0.19)	50 5/16"	(1278)	5 7/8"	(150)	4.66	(0.43)	2.06	(0.19)	64 1/16"	(1627)	8.15	(0.76)
AAN4820	2.06	(0.19)	50 5/16"	(1278)	5 7/8"	(150)	5.33	(0.50)	2.06	(0.19)	62 1/16"	(1576)	8.92	(0.83)
AAN4824	2.06	(0.19)	50 5/16"	(1278)	5 7/8"	(150)	6.68	(0.62)	2.06	(0.19)	58 1/16"	(1475)	10.46	(0.97)
AAN4828	2.06	(0.19)	50 5/16"	(1278)	5 7/8"	(150)	8.03	(0.75)	2.06	(0.19)	54 1/16"	(1373)	11.99	(1.11)
AAN4830	2.06	(0.19)	50 5/16"	(1278)	5 7/8"	(150)	9.38	(0.87)	2.06	(0.19)	50 1/16"	(1271)	13.53	(1.26)
AAN4834 †	2.06	(0.19)	50 5/16"	(1278)	5 7/8"	(150)	10.73	(1.00)	2.06	(0.19)	46 1/16"	(1170)	15.06	(1.40)
AAN4838 ††	2.06	(0.19)	50 5/16"	(1278)	5 7/8"	(150)	12.08	(1.12)	2.06	(0.19)	42 1/16"	(1068)	16.59	(1.54)
AAN4840 ††	2.06	(0.19)	50 5/16"	(1278)	5 7/8"	(150)	13.43	(1.25)	2.06	(0.19)	38 1/16"	(967)	18.13	(1.68)
AAN5014	2.22	(0.21)	54 5/16"	(1380)	5 7/8"	(150)	2.85	(0.26)	2.22	(0.21)	70 1/16"	(1779)	6.28	(0.58)
AAN5018	2.22	(0.21)	54 5/16"	(1380)	5 7/8"	(150)	4.31	(0.40)	2.22	(0.21)	66 1/16"	(1678)	7.92	(0.74)
AAN50110	2.22	(0.21)	54 5/16"	(1380)	5 7/8"	(150)	5.04	(0.47)	2.22	(0.21)	64 1/16"	(1627)	8.74	(0.81)
AAN5020	2.22	(0.21)	54 5/16"	(1380)	5 7/8"	(150)	5.77	(0.54)	2.22	(0.21)	62 1/16"	(1576)	9.57	(0.89)
AAN5024	2.22	(0.21)	54 5/16"	(1380)	5 7/8"	(150)	7.23	(0.67)	2.22	(0.21)	58 1/16"	(1475)	11.21	(1.04)
AAN5028	2.22	(0.21)	54 5/16"	(1380)	5 7/8"	(150)	9.36	(0.87)	2.22	(0.21)	54 1/16"	(1373)	13.73	(1.28)
AAN5030	2.22	(0.21)	54 5/16"	(1380)	5 7/8"	(150)	10.16	(0.94)	2.22	(0.21)	50 1/16"	(1271)	14.50	(1.35)
AAN5034 †	2.22	(0.21)	54 5/16"	(1380)	5 7/8"	(150)	11.62	(1.08)	2.22	(0.21)	46 1/16"	(1170)	16.15	(1.50)
AAN5038 ††	2.22	(0.21)	54 5/16"	(1380)	5 7/8"	(150)	13.08	(1.22)	2.22	(0.21)	42 1/16"	(1068)	17.80	(1.65)
AAN5040 ††	2.22	(0.21)	54 5/16"	(1380)	5 7/8"	(150)	14.54	(1.35)	2.22	(0.21)	38 1/16"	(967)	19.44	(1.81)
AAN5414	2.39	(0.22)	58 5/16"	(1481)	5 7/8"	(150)	3.07	(0.29)	2.39	(0.22)	70 1/16"	(1779)	6.70	(0.62)
AAN5418	2.39	(0.22)	58 5/16"	(1481)	5 7/8"	(150)	4.64	(0.43)	2.39	(0.22)	66 1/16"	(1678)	8.46	(0.79)
AAN54110	2.39	(0.22)	58 5/16"	(1481)	5 7/8"	(150)	5.42	(0.50)	2.39	(0.22)	64 1/16"	(1627)	9.33	(0.87)
AAN5420	2.39	(0.22)	58 5/16"	(1481)	5 7/8"	(150)	6.21	(0.58)	2.39	(0.22)	62 1/16"	(1576)	10.21	(0.95)
AAN5424	2.39	(0.22)	58 5/16"	(1481)	5 7/8"	(150)	7.78	(0.72)	2.39	(0.22)	58 1/16"	(1475)	11.97	(1.11)
AAN5428	2.39	(0.22)	58 5/16"	(1481)	5 7/8"	(150)	8.69	(0.81)	2.39	(0.22)	54 1/16"	(1373)	12.86	(1.19)
AAN5430	2.39	(0.22)	58 5/16"	(1481)	5 7/8"	(150)	10.93	(1.02)	2.39	(0.22)	50 1/16"	(1271)	15.48	(1.44)
AAN5434 †	2.39	(0.22)	58 5/16"	(1481)	5 7/8"	(150)	12.50	(1.16)	2.39	(0.22)	46 1/16"	(1170)	17.24	(1.60)
AAN5438 ††	2.39	(0.22)	58 5/16"	(1481)	5 7/8"	(150)	14.07	(1.31)	2.39	(0.22)	42 1/16"	(1068)	19.00	(1.77)
AAN5440 ††	2.39	(0.22)	58 5/16"	(1481)	5 7/8"	(150)	15.64	(1.45)	2.39	(0.22)	38 1/16"	(967)	20.75	(1.93)
AAN5814	2.55	(0.24)	62 5/16"	(1583)	5 7/8"	(150)	3.28	(0.30)	2.55	(0.24)	70 1/16"	(1779)	7.12	(0.66)
AAN5818	2.55	(0.24)	62 5/16"	(1583)	5 7/8"	(150)	4.97	(0.46)	2.55	(0.24)	66 1/16"	(1678)	8.99	(0.84)
AAN58110	2.55	(0.24)	62 5/16"	(1583)	5 7/8"	(150)	5.81	(0.54)	2.55	(0.24)	64 1/16"	(1627)	9.92	(0.92)
AAN5820	2.55	(0.24)	62 5/16"	(1583)	5 7/8"	(150)	6.65	(0.62)	2.55	(0.24)	62 1/16"	(1576)	10.86	(1.01)
AAN5824	2.55	(0.24)	62 5/16"	(1583)	5 7/8"	(150)	8.33	(0.77)	2.55	(0.24)	58 1/16"	(1475)	12.73	(1.18)
AAN5828	2.55	(0.24)	62 5/16"	(1583)	5 7/8"	(150)	10.02	(0.93)	2.55	(0.24)	54 1/16"	(1373)	14.59	(1.36)
AAN5830	2.55	(0.24)	62 5/16"	(1583)	5 7/8"	(150)	11.70	(1.09)	2.55	(0.24)	50 1/16"	(1271)	16.46	(1.53)
AAN5834 †	2.55	(0.24)	62 5/16"	(1583)	5 7/8"	(150)	13.38	(1.24)	2.55	(0.24)	46 1/16"	(1170)	18.33	(1.70)
AAN5838 ††	2.55	(0.24)	62 5/16"	(1583)	5 7/8"	(150)	15.07	(1.40)	2.55	(0.24)	42 1/16"	(1068)	20.20	(1.88)
AAN5840 ††	2.55	(0.24)	62 5/16"	(1583)	5 7/8"	(150)	16.75	(1.56)	2.55	(0.24)	38 1/16"	(967)	22.07	(2.05)
AAN6014	2.71	(0.25)	66 5/16"	(1684)	5 7/8"	(150)	3.50	(0.33)	2.71	(0.25)	70 1/16"	(1779)	7.55	(0.70)
AAN6018	2.71	(0.25)	66 5/16"	(1684)	5 7/8"	(150)	5.29	(0.49)	2.71	(0.25)	66 1/16"	(1678)	9.53	(0.89)
AAN60110	2.71	(0.25)	66 5/16"	(1684)	5 7/8"	(150)	6.19	(0.58)	2.71	(0.25)	64 1/16"	(1627)	10.51	(0.98)
AAN6020	2.71	(0.25)	66 5/16"	(1684)	5 7/8"	(150)	7.09	(0.66)	2.71	(0.25)	62 1/16"	(1576)	11.50	(1.07)
AAN6024	2.71	(0.25)	66 5/16"	(1684)	5 7/8"	(150)	8.88	(0.82)	2.71	(0.25)	58 1/16"	(1475)	13.48	(1.25)
AAN6028	2.71	(0.25)	66 5/16"	(1684)	5 7/8"	(150)	10.68	(0.99)	2.71	(0.25)	54 1/16"	(1373)	15.46	(1.44)
AAN6030	2.71	(0.25)	66 5/16"	(1684)	5 7/8"	(150)	12.47	(1.16)	2.71	(0.25)	50 1/16"	(1271)	17.44	(1.62)
AAN6034 †	2.71	(0.25)	66 5/16"	(1684)	5 7/8"	(150)	14.27	(1.33)	2.71	(0.25)	46 1/16"	(1170)	19.42	(1.80)
AAN6038 ††	2.71	(0.25)	66 5/16"	(1684)	5 7/8"	(150)	16.06	(1.49)	2.71	(0.25)	42 1/16"	(1068)	21.40	(1.99)
AAN6040 ††	2.71	(0.25)	66 5/16"	(1684)	5 7/8"	(150)	17.85	(1.66)	2.71	(0.25)	38 1/16"	(967)	23.38	(2.17)

• "Top of Subfloor to Top of Inside Sill Stop" is calculated based upon a structural header height of 6'-10 1/2" (2096).
• Dimensions in parentheses are in millimeters or square meters.
†Not available with triple-pane annealed glass.
††Not available with triple-pane annealed or tempered glass.

Grille Patterns

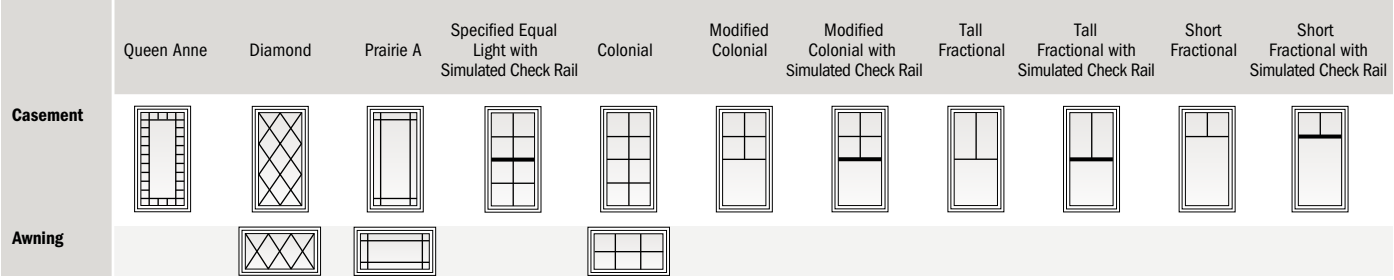

Number of lights and overall pattern varies with window size.

Patterns may not be available in all configurations or sizes.

Six-light prairie, specified equal light, specified equal light fractional and custom patterns are also available. For more grille options, see page 19 or visit **andersenwindows.com/grilles**.

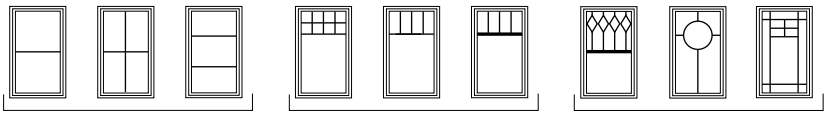

*Bottom horizontal bar located at center or at custom dimensions.

Awning Window Details

Scale 1 1/2" (38) = 1'-0" (305) – 1:8

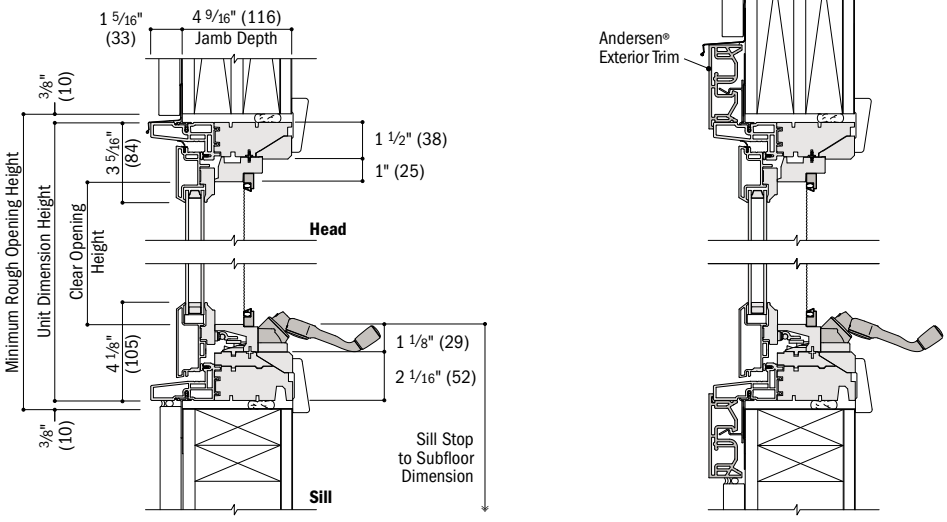

Vertical Section **Vertical Section**

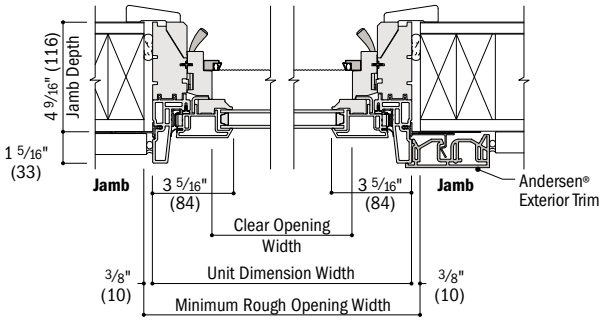

See pages 60-62 for joining details.

Horizontal Section

- 4 9/16" (116) base jamb depth measurement is from backside of installation flange.
- Light-colored areas are parts included with window. Dark-colored areas are additional Andersen® parts required to complete window assembly as shown.
- Dimensions in parentheses are in millimeters.
- **Minimum rough openings may need to be increased to allow for use of building wraps, flashing, sill panning, brackets, fasteners or other items. See installation information on pages 226-227.**
- Details are for illustration only and are not intended to represent product installation methods or materials. Refer to product installation instructions at andersenwindows.com.

Table of Double-Hung Window Sizes

Scale 1/8" (3) = 1'-0" (305) – 1:96

Notes on the next page also apply to this page.

Unit Dimension	1'-7 1/4" (489)	1'-11 1/4" (591)	2'-3 1/4" (692)	2'-5 1/4" (743)	2'-7 1/4" (794)	2'-9 1/4" (845)	2'-11 1/4" (895)	3'-1 1/4" (946)	3'-3 1/4" (997)	3'-7 1/4" (1099)	3'-11 1/4" (1200)
Minimum Rough Opening	1'-8" (508)	2'-0" (610)	2'-4" (711)	2'-6" (762)	2'-8" (813)	2'-10" (864)	3'-0" (914)	3'-2" (965)	3'-4" (1016)	3'-8" (1118)	4'-0" (1219)
Unobstructed Glass (lower sash only)	12 5/8" (321)	16 5/8" (422)	20 5/8" (524)	22 5/8" (575)	24 5/8" (625)	26 5/8" (676)	28 5/8" (727)	30 5/8" (778)	32 5/8" (829)	36 5/8" (930)	40 5/8" (1032)

2:3 cottage or 3:2 reverse cottage sash ratio available for all standard widths and heights up to 6'-7 1/4" (2013).

CUSTOM WIDTHS – 15 1/4" to 47 1/4"

CUSTOM HEIGHTS – 31 3/4" to 80 7/8"

CUSTOM WIDTHS – 15 1/4" to **47 1/4"**

CUSTOM HEIGHTS – 27 1/4" to **95 1/4"**

2'-11 1/4" (895) 3'-0" (914) 12 13/16" (325)	ADH1830	ADH2030	ADH2430	ADH2630	ADH2830	ADH21030	ADH3030	ADH3230	ADH3430	ADH3830*	ADH4030*	Cottage / Reverse Cottage
3'-3 1/4" (997) 3'-4" (1016) 14 13/16" (376)	ADH1834	ADH2034	ADH2434	ADH2634	ADH2834	ADH21034	ADH3034	ADH3234	ADH3434	ADH3834*	ADH4034*	
3'-7 1/4" (1099) 3'-8" (1118) 16 13/16" (427)	ADH1838	ADH2038	ADH2438	ADH2638	ADH2838	ADH21038	ADH3038	ADH3238	ADH3438	ADH3838*	ADH4038*	
3'-11 1/4" (1200) 4'-0" (1219) 18 13/16" (478)	ADH1840	ADH2040	ADH2440	ADH2640	ADH2840	ADH21040	ADH3040	ADH3240	ADH3440	ADH3840*	ADH4040*	
4'-3 1/4" (1302) 4'-4" (1321) 20 13/16" (529)	ADH1844	ADH2044	ADH2444	ADH2644	ADH2844	ADH21044	ADH3044	ADH3244	ADH3444	ADH3844*	ADH4044*	
4'-7 1/4" (1403) 4'-8" (1422) 22 13/16" (579)	ADH1848	ADH2048	ADH2448	ADH2648	ADH2848	ADH21048	ADH3048	ADH3248	ADH3448	ADH3848*	ADH4048*	
4'-11 1/4" (1505) 5'-0" (1524) 24 13/16" (630)	ADH1850	ADH2050	ADH2450	ADH2650	ADH2850	ADH21050	ADH3050	ADH3250◊	ADH3450◊	ADH3850◊*	ADH4050◊*	
5'-3 1/4" (1607) 5'-4" (1626) 26 13/16" (681)	ADH1854	ADH2054	ADH2454	ADH2654	ADH2854	ADH21054	ADH3054◊	ADH3254◊	ADH3454◊	ADH3854◊*	ADH4054◊*	
5'-7 1/4" (1708) 5'-8" (1727) 28 13/16" (732)	ADH1858	ADH2058	ADH2458	ADH2658	ADH2858	ADH21058◊	ADH3058◊	ADH3258◊	ADH3458◊	ADH3858◊*	ADH4058◊*	
5'-11 1/4" (1810) 6'-0" (1829) 30 13/16" (783)	ADH1860	ADH2060	ADH2460	ADH2660	ADH2860◊	ADH21060◊	ADH3060◊	ADH3260◊	ADH3460◊	ADH3860◊*	ADH4060◊*	
6'-3 1/4" (1911) 6'-4" (1930) 32 13/16" (833)	ADH1864	ADH2064	ADH2464	ADH2664◊	ADH2864◊	ADH21064◊	ADH3064◊	ADH3264◊	ADH3464◊	ADH3864◊*	ADH4064◊♦*	

continued on next page

Table of Double-Hung Window Sizes *(continued)*

Scale 1/8" (3) = 1'-0" (305) – 1:96

Unit Dimension	1'-7 1/4" (489)	1'-11 1/4" (591)	2'-3 1/4" (692)	2'-5 1/4" (743)	2'-7 1/4" (794)	2'-9 1/4" (845)	2'-11 1/4" (895)	3'-1 1/4" (946)	3'-3 1/4" (997)	3'-7 1/4" (1099)	3'-11 1/4" (1200)
Minimum Rough Opening	1'-8" (508)	2'-0" (610)	2'-4" (711)	2'-6" (762)	2'-8" (813)	2'-10" (864)	3'-0" (914)	3'-2" (965)	3'-4" (1016)	3'-8" (1118)	4'-0" (1219)
Unobstructed Glass (lower sash only)	12 5/8" (321)	16 5/8" (422)	20 5/8" (524)	22 5/8" (575)	24 5/8" (625)	26 5/8" (676)	28 5/8" (727)	30 5/8" (778)	32 5/8" (829)	36 5/8" (930)	40 5/8" (1031)

2:3 cottage or 3:2 reverse cottage sash ratio available for all standard widths and heights up to 6'-7 1/4" (2013).

CUSTOM WIDTHS – 15 1/4" to 47 1/4"

CUSTOM HEIGHTS – 31 3/4" to 80 7/8"

CUSTOM WIDTHS – 15 1/4" to **47 1/4"**

CUSTOM HEIGHTS – 27 1/4" to **95 1/4"**

6'-7 1/4" (2013) / 6'-8" (2032) / 34 13/16" (884)	**ADH**1868	**ADH**2068	**ADH**2468	**ADH**2668◊	**ADH**2868◊	**ADH**21068◊	**ADH**3068◊	**ADH**3268◊	**ADH**3468◊	**ADH**3868◊♦*	**ADH**4068◊♦*
7'-3 1/4" (2216) / 7'-4" (2235) / 38 13/16" (986)	**ADH**1874	**ADH**2074	**ADH**2474◊	**ADH**2674◊	**ADH**2874◊	**ADH**21074◊	**ADH**3074◊	**ADH**3274◊	**ADH**3474◊♦	**ADH**3874◊♦*	**ADH**4074◊♦*
7'-11 1/4" (2419) / 8'-0" (2438) / 42 13/16" (1087)	**ADH**1880	**ADH**2080	**ADH**2480◊	**ADH**2680◊	**ADH**2880◊	**ADH**21080◊	**ADH**3080◊♦	**ADH**3280◊♦	**ADH**3480◊♦	**ADH**3880◊♦*	**ADH**4080◊♦*

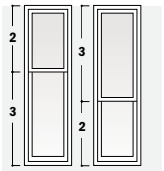

Custom-size windows are available in 1/8" (3) increments. See page 64 for custom sizes and specifications, including windows with cottage and reverse cottage sash.

All sizes shown are available with PG upgrade.‡ All cottage and reverse cottage sash double-hung window sizes are also available with PG upgrade.‡

For windows with dual-pane glass, two locks are standard on windows wider than 3'-3 1/4" (997). For windows with triple-pane glass or art glass, two locks are standard on sizes wider than 1'-7 1/8" (486) (all sizes shown). Two locks are standard for all windows with PG upgrade.

Grille patterns and details are shown on page 43.

- "Window Dimension" always refers to outside frame-to-frame dimension.
- "**Minimum Rough Opening**" **dimensions may need to be increased to allow for use of building wraps, flashing, sill panning, brackets, fasteners or other items. See pages 226-227 for more details.**
- Dimensions in parentheses are in millimeters.
- Two locks are standard for windows with triple-pane glass or art glass on sizes wider than 1'-7 1/8" (486) (all sizes shown). Two locks are standard for all windows with PG upgrade.

‡PG upgrade is not available for custom sizes less than 19 1/4" (489) wide.
◊Meets or exceeds clear opening area of 5.7 sq. ft. or 0.53 m², clear opening width of 20" (508) and clear opening height of 24" (610). See tables on pages 40-42.
♦Limited sash travel for windows with triple-pane glass or art glass. Sizes 3880 and 4080 are not available with art glass.
*Two locks are standard for windows with dual-pane glass on sizes wider than 3'-3 1/4" (997).

Double-Hung Window Opening and Area Specifications

Window Number	Clear Opening Area Sq. Ft./(m²)		Clear Opening in Full Open Position Width Inches/(mm)		Height Inches/(mm)		Glass Area Sq. Ft./(m²)		Vent Area Sq. Ft./(m²)		Top of Subfloor to Top of Inside Sill Stop Inches/(mm)		Overall Window Area Sq. Ft./(m²)	
ADH1830	1.37	(0.13)	15 3/16"	(386)	13"	(330)	2.24	(0.21)	1.46	(0.14)	48 7/8"	(1242)	4.71	(0.44)
ADH1834	1.58	(0.15)	15 3/16"	(386)	15"	(380)	2.59	(0.24)	1.67	(0.16)	44 7/8"	(1140)	5.25	(0.49)
ADH1838	1.79	(0.17)	15 3/16"	(386)	17"	(431)	2.94	(0.27)	1.88	(0.17)	40 7/8"	(1039)	5.78	(0.54)
ADH1840	2.00	(0.19)	15 3/16"	(386)	19"	(482)	3.29	(0.31)	2.09	(0.19)	36 7/8"	(937)	6.32	(0.59)
ADH1844	2.21	(0.21)	15 3/16"	(386)	21"	(533)	3.64	(0.34)	2.30	(0.21)	32 7/8"	(836)	6.85	(0.64)
ADH1848	2.42	(0.23)	15 3/16"	(386)	23"	(584)	3.99	(0.37)	2.51	(0.23)	28 7/8"	(734)	7.39	(0.69)
ADH1850	2.64	(0.24)	15 3/16"	(386)	25"	(634)	4.34	(0.40)	2.72	(0.25)	24 7/8"	(632)	7.92	(0.74)
ADH1854	2.85	(0.26)	15 3/16"	(386)	27"	(685)	4.69	(0.44)	2.94	(0.27)	20 7/8"	(531)	8.46	(0.79)
ADH1858	3.06	(0.28)	15 3/16"	(386)	29"	(736)	5.04	(0.47)	3.15	(0.29)	16 7/8"	(429)	8.99	(0.84)
ADH1860	3.27	(0.30)	15 3/16"	(386)	31"	(787)	5.39	(0.50)	3.36	(0.31)	12 7/8"	(328)	9.52	(0.88)
ADH1864	3.48	(0.32)	15 3/16"	(386)	33"	(838)	5.74	(0.53)	3.56	(0.33)	8 7/8"	(226)	10.06	(0.93)
ADH1868	3.69	(0.34)	15 3/16"	(386)	35"	(889)	6.09	(0.57)	3.78	(0.35)	4 7/8"	(124)	10.59	(0.98)
ADH1874	4.11	(0.38)	15 3/16"	(386)	39"	(991)	6.79	(0.63)	4.20	(0.39)	10 3/8"	(264)	11.66	(1.08)
ADH1880	4.53	(0.42)	15 3/16"	(386)	43"	(1092)	7.49	(0.70)	4.62	(0.43)	2 3/8"	(60)	12.73	(1.18)
ADH2030	1.73	(0.16)	19 3/16"	(488)	13"	(330)	2.95	(0.27)	1.84	(0.17)	48 7/8"	(1242)	5.69	(0.53)
ADH2034	2.00	(0.19)	19 3/16"	(488)	15"	(380)	3.41	(0.32)	2.11	(0.20)	44 7/8"	(1140)	6.34	(0.59)
ADH2038	2.26	(0.21)	19 3/16"	(488)	17"	(431)	3.87	(0.36)	2.38	(0.22)	40 7/8"	(1039)	6.98	(0.65)
ADH2040	2.53	(0.24)	19 3/16"	(488)	19"	(482)	4.33	(0.40)	2.64	(0.25)	36 7/8"	(937)	7.63	(0.71)
ADH2044	2.80	(0.26)	19 3/16"	(488)	21"	(533)	4.80	(0.45)	2.91	(0.27)	32 7/8"	(836)	8.27	(0.77)
ADH2048	3.06	(0.28)	19 3/16"	(488)	23"	(584)	5.26	(0.49)	3.18	(0.29)	28 7/8"	(734)	8.92	(0.83)
ADH2050	3.33	(0.31)	19 3/16"	(488)	25"	(634)	5.72	(0.53)	3.44	(0.32)	24 7/8"	(632)	9.57	(0.89)
ADH2054	3.60	(0.33)	19 3/16"	(488)	27"	(685)	6.18	(0.57)	3.71	(0.34)	20 7/8"	(531)	10.21	(0.95)
ADH2058	3.86	(0.36)	19 3/16"	(488)	29"	(736)	6.64	(0.62)	3.98	(0.37)	16 7/8"	(429)	10.86	(1.01)
ADH2060	4.13	(0.38)	19 3/16"	(488)	31"	(787)	7.10	(0.66)	4.24	(0.39)	12 7/8"	(328)	11.50	(1.07)
ADH2064	4.40	(0.41)	19 3/16"	(488)	33"	(838)	7.56	(0.70)	4.50	(0.42)	8 7/8"	(226)	12.15	(1.13)
ADH2068	4.66	(0.43)	19 3/16"	(488)	35"	(889)	8.02	(0.75)	4.77	(0.44)	4 7/8"	(124)	12.80	(1.19)
ADH2074	5.20	(0.48)	19 3/16"	(488)	39"	(991)	8.95	(0.83)	5.30	(0.49)	10 3/8"	(264)	14.09	(1.31)
ADH2080	5.73	(0.53)	19 3/16"	(488)	43"	(1092)	9.87	(0.92)	5.84	(0.54)	2 3/8"	(60)	15.38	(1.43)
ADH2430	2.09	(0.19)	23 3/16"	(589)	13"	(330)	3.66	(0.34)	2.23	(0.21)	48 7/8"	(1242)	6.67	(0.62)
ADH2434	2.41	(0.22)	23 3/16"	(589)	15"	(380)	4.24	(0.39)	2.55	(0.24)	44 7/8"	(1140)	7.43	(0.69)
ADH2438	2.73	(0.25)	23 3/16"	(589)	17"	(431)	4.81	(0.45)	2.87	(0.27)	40 7/8"	(1039)	8.18	(0.76)
ADH2440	3.06	(0.28)	23 3/16"	(589)	19"	(482)	5.38	(0.50)	3.19	(0.30)	36 7/8"	(937)	8.94	(0.83)
ADH2444	3.38	(0.31)	23 3/16"	(589)	21"	(533)	5.95	(0.55)	3.51	(0.33)	32 7/8"	(836)	9.70	(0.90)
ADH2448	3.70	(0.34)	23 3/16"	(589)	23"	(584)	6.52	(0.61)	3.84	(0.36)	28 7/8"	(734)	10.46	(0.97)
ADH2450	4.02	(0.37)	23 3/16"	(589)	25"	(634)	7.10	(0.66)	4.16	(0.39)	24 7/8"	(632)	11.21	(1.04)
ADH2454	4.35	(0.40)	23 3/16"	(589)	27"	(685)	7.67	(0.71)	4.48	(0.42)	20 7/8"	(531)	11.97	(1.11)
ADH2458	4.67	(0.43)	23 3/16"	(589)	29"	(736)	8.24	(0.77)	4.80	(0.45)	16 7/8"	(429)	12.73	(1.18)
ADH2460	4.99	(0.46)	23 3/16"	(589)	31"	(787)	8.81	(0.82)	5.13	(0.48)	12 7/8"	(328)	13.48	(1.25)
ADH2464	5.31	(0.49)	23 3/16"	(589)	33"	(838)	9.39	(0.87)	5.44	(0.51)	8 7/8"	(226)	14.24	(1.32)
ADH2468	5.63	(0.52)	23 3/16"	(589)	35"	(889)	9.96	(0.93)	5.76	(0.54)	4 7/8"	(124)	15.00	(1.39)
ADH2474 ◊	6.28	(0.58)	23 3/16"	(589)	39"	(991)	11.10	(1.03)	6.41	(0.60)	10 3/8"	(264)	16.51	(1.53)
ADH2480 ◊	6.92	(0.64)	23 3/16"	(589)	43"	(1092)	12.25	(1.14)	7.05	(0.66)	2 3/8"	(60)	18.02	(1.67)
ADH2630	2.27	(0.21)	25 3/16"	(640)	13"	(330)	4.02	(0.37)	2.42	(0.22)	48 7/8"	(1242)	7.16	(0.67)
ADH2634	2.62	(0.24)	25 3/16"	(640)	15"	(380)	4.65	(0.43)	2.77	(0.26)	44 7/8"	(1140)	7.97	(0.74)
ADH2638	2.97	(0.28)	25 3/16"	(640)	17"	(431)	5.27	(0.49)	3.12	(0.29)	40 7/8"	(1039)	8.79	(0.82)
ADH2640	3.32	(0.31)	25 3/16"	(640)	19"	(482)	5.90	(0.55)	3.47	(0.32)	36 7/8"	(937)	9.60	(0.89)
ADH2644	3.67	(0.34)	25 3/16"	(640)	21"	(533)	6.53	(0.61)	3.82	(0.35)	32 7/8"	(836)	10.41	(0.97)
ADH2648	4.02	(0.37)	25 3/16"	(640)	23"	(584)	7.16	(0.66)	4.17	(0.39)	28 7/8"	(734)	11.22	(1.04)
ADH2650	4.37	(0.41)	25 3/16"	(640)	25"	(634)	7.79	(0.72)	4.52	(0.42)	24 7/8"	(632)	12.04	(1.12)
ADH2654	4.72	(0.44)	25 3/16"	(640)	27"	(685)	8.41	(0.78)	4.87	(0.45)	20 7/8"	(531)	12.85	(1.19)
ADH2658	5.07	(0.47)	25 3/16"	(640)	29"	(736)	9.04	(0.84)	5.22	(0.48)	16 7/8"	(429)	13.66	(1.27)
ADH2660	5.42	(0.50)	25 3/16"	(640)	31"	(787)	9.67	(0.90)	5.57	(0.52)	12 7/8"	(328)	14.47	(1.34)
ADH2664 ◊	5.77	(0.54)	25 3/16"	(640)	33"	(838)	10.30	(0.96)	5.91	(0.55)	8 7/8"	(226)	15.29	(1.42)
ADH2668 ◊	6.12	(0.57)	25 3/16"	(640)	35"	(889)	10.92	(1.01)	6.26	(0.58)	4 7/8"	(124)	16.10	(1.50)
ADH2674 ◊	6.82	(0.63)	25 3/16"	(640)	39"	(991)	12.18	(1.13)	6.96	(0.65)	10 3/8"	(264)	17.72	(1.65)
ADH2680 ◊	7.52	(0.70)	25 3/16"	(640)	43"	(1092)	13.44	(1.25)	7.66	(0.71)	2 3/8"	(60)	19.35	(1.80)
ADH2830	2.45	(0.23)	27 3/16"	(691)	13"	(330)	4.37	(0.41)	2.61	(0.24)	48 7/8"	(1242)	7.65	(0.71)
ADH2834	2.83	(0.26)	27 3/16"	(691)	15"	(380)	5.06	(0.47)	2.99	(0.28)	44 7/8"	(1140)	8.52	(0.79)

• "Top of Subfloor to Top of Inside Sill Stop" is calculated based upon a structural header height of 6'-10 1/2" (2096) except for units greater than 81 3/4" (2076) in height that are calculated using a header height of 8' (2438).

• Dimensions in parentheses are in millimeters or square meters.

◊Meets or exceeds clear opening area of 5.7 sq. ft. or 0.53 m², clear opening width of 20" (508) and clear opening height of 24" (610).

continued on next page

Double-Hung Window Opening and Area Specifications *(continued)*

Window Number	Clear Opening Area Sq. Ft./(m²)		Clear Opening in Full Open Position Width Inches/(mm)		Clear Opening in Full Open Position Height Inches/(mm)		Glass Area Sq. Ft./(m²)		Vent Area Sq. Ft./(m²)		Top of Subfloor to Top of Inside Sill Stop Inches/(mm)		Overall Window Area Sq. Ft./(m²)	
ADH2838	3.21	(0.30)	27 3/16"	(691)	17"	(431)	5.74	(0.53)	3.37	(0.31)	40 7/8"	(1039)	9.39	(0.87)
ADH2840	3.58	(0.33)	27 3/16"	(691)	19"	(482)	6.42	(0.60)	3.74	(0.35)	36 7/8"	(937)	10.25	(0.95)
ADH2844	3.96	(0.37)	27 3/16"	(691)	21"	(533)	7.11	(0.66)	4.12	(0.38)	32 7/8"	(836)	11.12	(1.03)
ADH2848	4.34	(0.40)	27 3/16"	691)	23"	(584)	7.79	(0.72)	4.50	(0.42)	28 7/8"	(734)	11.99	(1.11)
ADH2850	4.72	(0.44)	27 3/16"	(691)	25"	(634)	8.47	(0.79)	4.88	(0.45)	24 7/8"	(632)	12.86	(1.19)
ADH2854	5.10	(0.47)	27 3/16"	(691)	27"	(685)	9.16	(0.85)	5.25	(0.49)	20 7/8"	(531)	13.73	(1.28)
ADH2858	5.47	(0.51)	27 3/16"	(691)	29"	(736)	9.84	(0.91)	5.63	(0.52)	16 7/8"	(429)	14.59	(1.36)
ADH2860 ◊	5.85	(0.54)	27 3/16"	(691)	31"	(787)	10.52	(0.98)	6.01	(0.56)	12 7/8"	(328)	15.46	(1.44)
ADH2864 ◊	6.23	(0.58)	27 3/16"	(691)	33"	(838)	11.21	(1.04)	6.38	(0.59)	8 7/8"	(226)	16.33	(1.52)
ADH2868 ◊	6.61	(0.61)	27 3/16"	(691)	35"	(889)	11.89	(1.10)	6.76	(0.63)	4 7/8"	(124)	17.20	(1.60)
ADH2874 ◊	7.36	(0.68)	27 3/16"	(691)	39"	(991)	13.26	(1.23)	7.51	(0.70)	10 3/8"	(264)	18.93	(1.76)
ADH2880 ◊	8.12	(0.75)	27 3/16"	(691)	43"	(1092)	14.62	(1.36)	8.27	(0.77)	2 3/8"	(60)	20.67	(1.92)
ADH21030	2.63	(0.24)	29 3/16"	(742)	13"	(330)	4.73	(0.44)	2.80	(0.26)	48 7/8"	(1242)	8.14	(0.76)
ADH21034	3.04	(0.28)	29 3/16"	(742)	15"	(380)	5.47	(0.51)	3.21	(0.30)	44 7/8"	(1140)	9.06	(0.84)
ADH21038	3.44	(0.32)	29 3/16"	(742)	17"	(431)	6.21	(0.58)	3.61	(0.34)	40 7/8"	(1039)	9.99	(0.93)
ADH21040	3.85	(0.36)	29 3/16"	(742)	19"	(482)	6.95	(0.65)	4.02	(0.37)	36 7/8"	(937)	10.91	(1.01)
ADH21044	4.25	(0.40)	29 3/16"	(742)	21"	(533)	7.69	(0.71)	4.42	(0.41)	32 7/8"	(836)	11.83	(1.10)
ADH21048	4.66	(0.43)	29 3/16"	(742)	23"	(584)	8.42	(0.78)	4.83	(0.45)	28 7/8"	(734)	12.76	(1.19)
ADH21050	5.06	(0.47)	29 3/16"	(742)	25"	(634)	9.16	(0.85)	5.24	(0.49)	24 7/8"	(632)	13.68	(1.27)
ADH21054	5.47	(0.51)	29 3/16"	(742)	27"	(685)	9.90	(0.92)	5.64	(0.52)	20 7/8"	(531)	14.60	(1.36)
ADH21058 ◊	5.88	(0.55)	29 3/16"	(742)	29"	(736)	10.64	(0.99)	6.05	(0.56)	16 7/8"	(429)	15.53	(1.44)
ADH21060 ◊	6.28	(0.58)	29 3/16"	(742)	31"	(787)	11.38	(1.06)	6.45	(0.60)	12 7/8"	(328)	16.45	(1.53)
ADH21064 ◊	6.69	(0.62)	29 3/16"	(742)	33"	(838)	12.12	(1.13)	6.85	(0.64)	8 7/8"	(226)	17.38	(1.61)
ADH21068 ◊	7.09	(0.66)	29 3/16"	(742)	35"	(889)	12.86	(1.19)	7.25	(0.67)	4 7/8"	(124)	18.30	(1.70)
ADH21074 ◊	7.90	(0.73)	29 3/16"	(742)	39"	(991)	14.34	(1.33)	8.07	(0.75)	10 3/8"	(264)	20.15	(1.87)
ADH21080 ◊	8.71	(0.81)	29 3/16"	(742)	43"	(1092)	15.81	(1.47)	8.88	(0.82)	2 3/8"	(60)	21.99	(2.04)
ADH3030	2.81	(0.26)	31 3/16"	(792)	13"	(330)	5.09	(0.47)	2.99	(0.28)	48 7/8"	(1242)	8.63	(0.80)
ADH3034	3.25	(0.30)	31 3/16"	(792)	15"	(380)	5.88	(0.55)	3.43	(0.32)	44 7/8"	(1140)	9.61	(0.89)
ADH3038	3.68	(0.34)	31 3/16"	(792)	17"	(431)	6.67	(0.62)	3.86	(0.36)	40 7/8"	(1039)	10.59	(0.98)
ADH3040	4.11	(0.38)	31 3/16"	(792)	19"	(482)	7.47	(0.69)	4.29	(0.40)	36 7/8"	(937)	11.57	(1.07)
ADH3044	4.54	(0.42)	31 3/16"	(792)	21"	(533)	8.26	(0.77)	4.73	(0.44)	32 7/8"	(836)	12.55	(1.17)
ADH3048	4.98	(0.46)	31 3/16"	(792)	23"	(584)	9.06	(0.84)	5.16	(0.48)	28 7/8"	(734)	13.52	(1.26)
ADH3050	5.41	(0.50)	31 3/16"	(792)	25"	(634)	9.85	(0.92)	5.59	(0.52)	24 7/8"	(632)	14.50	(1.35)
ADH3054 ◊	5.84	(0.54)	31 3/16"	(792)	27"	(685)	10.65	(0.99)	6.03	(0.56)	20 7/8"	(531)	15.48	(1.44)
ADH3058 ◊	6.28	(0.58)	31 3/16"	(792)	29"	(736)	11.44	(1.06)	6.46	(0.60)	16 7/8"	(429)	16.46	(1.53)
ADH3060 ◊	6.71	(0.62)	31 3/16"	(792)	31"	(787)	12.24	(1.14)	6.89	(0.64)	12 7/8"	(328)	17.44	(1.62)
ADH3064 ◊	7.14	(0.66)	31 3/16"	(792)	33"	(838)	13.03	(1.21)	7.32	(0.68)	8 7/8"	(226)	18.42	(1.71)
ADH3068 ◊	7.58	(0.70)	31 3/16"	(792)	35"	(889)	13.82	(1.28)	7.75	(0.72)	4 7/8"	(124)	19.40	(1.80)
ADH3074 ◊	8.44	(0.78)	31 3/16"	(792)	39"	(991)	15.41	(1.43)	8.62	(0.80)	10 3/8"	(264)	21.36	(1.98)
ADH3080 ◊	9.31	(0.86)	31 3/16"	(792)	43"	(1092)	17.00	(1.58)	9.48	(0.88)	2 3/8"	(60)	23.32	(2.17)
ADH3230	2.99	(0.28)	33 3/16"	(843)	13"	(330)	5.44	(0.51)	3.19	(0.30)	48 7/8"	(1242)	9.12	(0.85)
ADH3234	3.45	(0.32)	33 3/16"	(843)	15"	(380)	6.29	(0.58)	3.65	(0.34)	44 7/8"	(1140)	10.15	(0.94)
ADH3238	3.91	(0.36)	33 3/16"	(843)	17"	(431)	7.14	(0.66)	4.11	(0.38)	40 7/8"	(1039)	11.19	(1.04)
ADH3240	4.38	(0.41)	33 3/16"	(843)	19"	(482)	7.99	(0.74)	4.57	(0.42)	36 7/8"	(937)	12.22	(1.14)
ADH3244	4.84	(0.45)	33 3/16"	(843)	21"	(533)	8.84	(0.82)	5.03	(0.47)	32 7/8"	(836)	13.26	(1.23)
ADH3248	5.30	(0.49)	33 3/16"	(843)	23"	(584)	9.69	(0.90)	5.49	(0.51)	28 7/8"	(734)	14.29	(1.33)
ADH3250 ◊	5.76	(0.53)	33 3/16"	(843)	25"	(634)	10.54	(0.98)	5.95	(0.55)	24 7/8"	(632)	15.33	(1.42)
ADH3254 ◊	6.22	(0.58)	33 3/16"	(843)	27"	(685)	11.39	(1.06)	6.41	(0.60)	20 7/8"	(531)	16.36	(1.52)
ADH3258 ◊	6.68	(0.62)	33 3/16"	(843)	29"	(736)	12.24	(1.14)	6.87	(0.64)	16 7/8"	(429)	17.40	(1.62)
ADH3260 ◊	7.14	(0.66)	33 3/16"	(843)	31"	(787)	13.09	(1.22)	7.34	(0.68)	12 7/8"	(328)	18.43	(1.71)
ADH3264 ◊	7.60	(0.71)	33 3/16"	(843)	33"	(838)	13.94	(1.30)	7.79	(0.72)	8 7/8"	(226)	19.47	(1.81)
ADH3268 ◊	8.06	(0.75)	33 3/16"	(843)	35"	(889)	14.79	(1.37)	8.25	(0.77)	4 7/8"	(124)	20.50	(1.90)
ADH3274 ◊	8.99	(0.83)	33 3/16"	(843)	39"	(991)	16.49	(1.53)	9.17	(0.85)	10 3/8"	(264)	22.57	(2.10)
ADH3280 ◊	9.91	(0.92)	33 3/16"	(843)	43"	(1092)	18.19	(1.69)	10.09	(0.94)	2 3/8"	(60)	24.64	(2.29)
ADH3430	3.17	(0.29)	35 3/16"	(894)	13"	(330)	5.80	(0.54)	3.38	(0.31)	48 7/8"	(1242)	9.61	(0.89)
ADH3434	3.66	(0.34)	35 3/16"	(894)	15"	(380)	6.70	(0.62)	3.87	(0.36)	44 7/8"	(1140)	10.70	(0.99)
ADH3438	4.15	(0.39)	35 3/16"	(894)	17"	(431)	7.61	(0.71)	4.36	(0.40)	40 7/8"	(1039)	11.79	(1.10)
ADH3440	4.64	(0.43)	35 3/16"	(894)	19"	(482)	8.51	(0.79)	4.84	(0.45)	36 7/8"	(937)	12.88	(1.20)

• "Top of Subfloor to Top of Inside Sill Stop" is calculated based upon a structural header height of 6'-10 1/2" (2096) except for units greater than 81 3/4" (2076) in height that are calculated using a header height of 8' (2438).
• Dimensions in parentheses are in millimeters or square meters.
◊Meets or exceeds clear opening area of 5.7 sq. ft. or 0.53 m², clear opening width of 20" (508) and clear opening height of 24" (610).

continued on next page

Double-Hung Window Opening and Area Specifications *(continued)*

Window Number	Clear Opening Area Sq. Ft./(m²)		Clear Opening in Full Open Position Width Inches/(mm)		Height Inches/(mm)		Glass Area Sq. Ft./(m²)		Vent Area Sq. Ft./(m²)		Top of Subfloor to Top of Inside Sill Stop Inches/(mm)		Overall Window Area Sq. Ft./(m²)	
ADH3444	5.13	(0.48)	35 3/16"	(894)	21"	(533)	9.42	(0.87)	5.33	(0.50)	32 7/8"	(836)	13.97	(1.30)
ADH3448	5.62	(0.52)	35 3/16"	(894)	23"	(584)	10.32	(0.96)	5.82	(0.54)	28 7/8"	(734)	15.06	(1.40)
ADH3450 ◊	6.11	(0.57)	35 3/16"	(894)	25"	(634)	11.23	(1.04)	6.31	(0.59)	24 7/8"	(632)	16.15	(1.50)
ADH3454 ◊	6.59	(0.61)	35 3/16"	(894)	27"	(685)	12.14	(1.13)	6.80	(0.63)	20 7/8"	(531)	17.24	(1.60)
ADH3458 ◊	7.08	(0.66)	35 3/16"	(894)	29"	(736)	13.04	(1.21)	7.29	(0.68)	16 7/8"	(429)	18.33	(1.70)
ADH3460 ◊	7.57	(0.70)	35 3/16"	(894)	31"	(787)	13.95	(1.30)	7.78	(0.72)	12 7/8"	(328)	19.42	(1.80)
ADH3464 ◊	8.06	(0.75)	35 3/16"	(894)	33"	(838)	14.85	(1.38)	8.26	(0.77)	8 7/8"	(226)	20.51	(1.91)
ADH3468 ◊	8.55	(0.79)	35 3/16"	(894)	35"	(889)	15.76	(1.46)	8.74	(0.81)	4 7/8"	(124)	21.60	(2.01)
ADH3474 ◊	9.53	(0.89)	35 3/16"	(894)	39"	(991)	17.57	(1.63)	9.72	(0.90)	10 3/8"	(264)	23.78	(2.21)
ADH3480 ◊	10.50	(0.98)	35 3/16"	(894)	43"	(1092)	19.38	(1.80)	10.70	(0.99)	2 3/8"	(60)	25.96	(2.41)
ADH3830	3.53	(0.33)	39 3/16"	(996)	13"	(330)	6.51	(0.60)	3.76	(0.35)	48 7/8"	(1242)	10.59	(0.98)
ADH3834	4.08	(0.38)	39 3/16"	(996)	15"	(380)	7.52	(0.70)	4.31	(0.40)	44 7/8"	(1140)	11.79	(1.10)
ADH3838	4.62	(0.43)	39 3/16"	(996)	17"	(431)	8.54	(0.79)	4.85	(0.45)	40 7/8"	(1039)	12.99	(1.21)
ADH3840	5.17	(0.48)	39 3/16"	(996)	19"	(482)	9.56	(0.89)	5.40	(0.50)	36 7/8"	(937)	14.19	(1.32)
ADH3844	5.71	(0.53)	39 3/16"	(996)	21"	(533)	10.57	(0.98)	5.94	(0.55)	32 7/8"	(836)	15.39	(1.43)
ADH3848	6.25	(0.58)	39 3/16"	(996)	23"	(584)	11.59	(1.08)	6.48	(0.60)	28 7/8"	(734)	16.59	(1.54)
ADH3850 ◊	6.80	(0.63)	39 3/16"	(996)	25"	(634)	12.61	(1.17)	7.03	(0.65)	24 7/8"	(632)	17.80	(1.65)
ADH3854 ◊	7.34	(0.68)	39 3/16"	(996)	27"	(685)	13.62	(1.27)	7.57	(0.70)	20 7/8"	(531)	19.00	(1.76)
ADH3858 ◊	7.89	(0.73)	39 3/16"	(996)	29"	(736)	14.64	(1.36)	8.12	(0.75)	16 7/8"	(429)	20.20	(1.88)
ADH3860 ◊	8.43	(0.78)	39 3/16"	(996)	31"	(787)	15.66	(1.45)	8.66	(0.80)	12 7/8"	(328)	21.40	(1.99)
ADH3864 ◊	8.98	(0.83)	39 3/16"	(996)	33"	(838)	16.67	(1.55)	9.19	(0.85)	8 7/8"	(226)	22.60	(2.10)
ADH3868 ◊	9.52	(0.88)	39 3/16"	(996)	35"	(889)	17.69	(1.64)	9.74	(0.90)	4 7/8"	(124)	23.80	(2.21)
ADH3874 ◊	10.61	(0.99)	39 3/16"	(996)	39"	(991)	19.72	(1.83)	10.83	(1.01)	10 3/8"	(264)	26.21	(2.43)
ADH3880 ◊	11.70	(1.09)	39 3/16"	(996)	43"	(1092)	21.76	(2.02)	11.92	(1.11)	2 3/8"	(60)	28.61	(2.66)
ADH4030	3.89	(0.36)	43 3/16"	(1097)	13"	(330)	7.22	(0.67)	4.15	(0.39)	48 7/8"	(1242)	11.57	(1.07)
ADH4034	4.49	(0.42)	43 3/16"	(1097)	15"	(380)	8.35	(0.78)	4.75	(0.44)	44 7/8"	(1140)	12.88	(1.20)
ADH4038	5.09	(0.47)	43 3/16"	(1097)	17"	(431)	9.47	(0.88)	5.35	(0.50)	40 7/8"	(1039)	14.19	(1.32)
ADH4040	5.69	(0.53)	43 3/16"	(1097)	19"	(482)	10.60	(0.98)	5.95	(0.55)	36 7/8"	(937)	15.50	(1.44)
ADH4044	6.29	(0.58)	43 3/16"	(1097)	21"	(533)	11.73	(1.09)	6.55	(0.61)	32 7/8"	(836)	16.82	(1.56)
ADH4048	6.89	(0.64)	43 3/16"	(1097)	23"	(584)	12.86	(1.19)	7.15	(0.66)	28 7/8"	(734)	18.13	(1.68)
ADH4050 ◊	7.49	(0.70)	43 3/16"	(1097)	25"	(634)	13.99	(1.30)	7.75	(0.72)	24 7/8"	(632)	19.44	(1.81)
ADH4054 ◊	8.09	(0.75)	43 3/16"	(1097)	27"	(685)	15.11	(1.40)	8.35	(0.78)	20 7/8"	(531)	20.75	(1.93)
ADH4058 ◊	8.69	(0.81)	43 3/16"	(1097)	29"	(736)	16.24	(1.51)	8.95	(0.83)	16 7/8"	(429)	22.07	(2.05)
ADH4060 ◊	9.29	(0.86)	43 3/16"	(1097)	31"	(787)	17.37	(1.61)	9.55	(0.89)	12 7/8"	(328)	23.38	(2.17)
ADH4064 ◊	9.89	(0.92)	43 3/16"	(1097)	33"	(838)	18.50	(1.72)	10.13	(0.94)	8 7/8"	(226)	24.96	(2.29)
ADH4068 ◊	10.49	(0.97)	43 3/16"	(1097)	35"	(889)	19.62	(1.82)	10.73	(1.00)	4 7/8"	(124)	26.00	(2.42)
ADH4074 ◊	11.69	(1.09)	43 3/16"	(1097)	39"	(991)	21.88	(2.03)	11.93	(1.11)	10 3/8"	(264)	28.63	(2.66)
ADH4080 ◊	12.89	(1.20)	43 3/16"	(1097)	43"	(1092)	24.14	(2.24)	13.13	(1.22)	2 3/8"	(60)	31.25	(2.90)

• "Top of Subfloor to Top of Inside Sill Stop" is calculated based upon a structural header height of 6'-10 1/2" (2096) except for units greater than 81 3/4" (2076) in height that are calculated using a header height of 8' (2438).
• Dimensions in parentheses are in millimeters or square meters.
◊Meets or exceeds clear opening area of 5.7 sq. ft. or 0.53 m², clear opening width of 20" (508) and clear opening height of 24" (610).

Grille Patterns

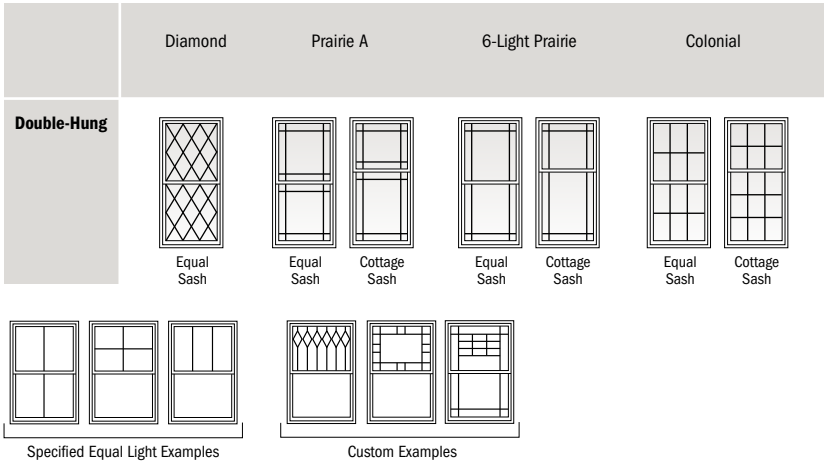

Double-hung window patterns are also available in Upper Sash Only (USO) configurations. For picture window patterns that require alignment with double-hung patterns, identify the double-hung sash style (equal, cottage, reverse cottage) when ordering. **Number of lights and overall pattern varies with window size. Patterns may not be available in all configurations or sizes.** Specified equal light and custom patterns are also available. Some restrictions apply. For more grille options, see page 19 or visit **andersenwindows.com/grilles**.

Double-Hung Window Details

Scale 1 1/2" (38) = 1'-0" (305) – 1:8

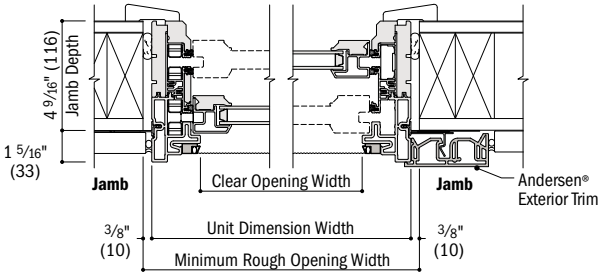

Horizontal Section

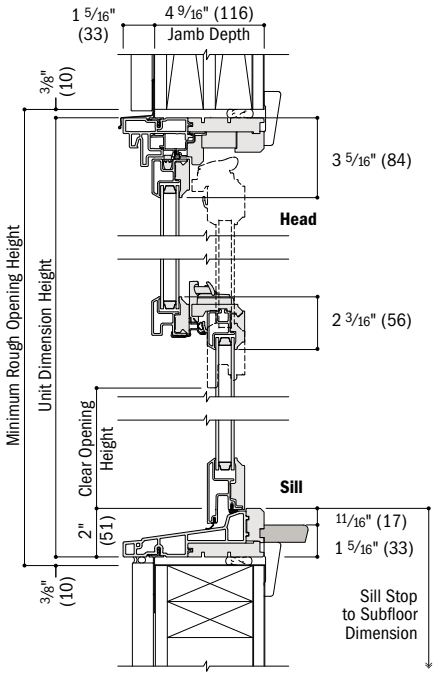

Vertical Section

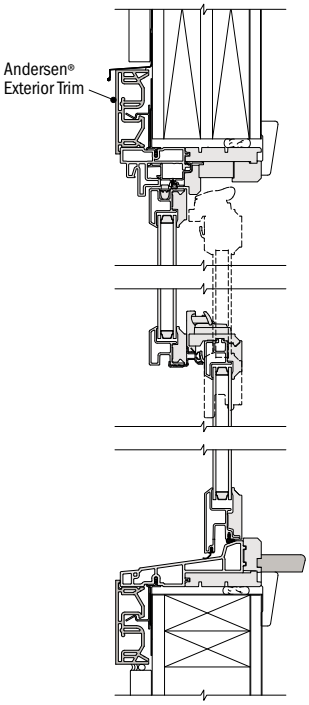

Vertical Section

See pages 60-62 for joining details.

- 4 9/16" (116) base jamb depth measurement is from back side of installation flange.
- Light-colored areas are parts included with window. Dark-colored areas are additional Andersen® parts required to complete window assembly as shown.
- Dimensions in parentheses are in millimeters.
- **Minimum rough openings may need to be increased to allow for use of building wraps, flashing, sill panning, brackets, fasteners or other items. See installation information on pages 226-227.**
- Details are for illustration only and are not intended to represent product installation methods or materials. Refer to product installation instructions at andersenwindows.com.

Table of Picture Window Sizes

Scale 1/8" (3) = 1'-0" (305) — 1:96

Notes on the next page also apply to this page.

Window Dimension	1'-3 1/4" (387)	1'-7 1/4" (489)	1'-11 1/4" (591)	2'-3 1/4" (692)	2'-5 1/4" (743)	2'-7 1/4" (794)	2'-9 1/4" (845)	2'-11 1/4" (895)	3'-1 1/4" (946)	3'-3 1/4" (997)	3'-7 1/4" (1099)	3'-11 1/4" (1200)
Minimum Rough Opening	1'-4" (406)	1'-8" (508)	2'-0" (610)	2'-4" (711)	2'-6" (762)	2'-8" (813)	2'-10" (864)	3'-0" (914)	3'-2" (965)	3'-4" (1016)	3'-8" (1118)	4'-0" (1219)
Unobstructed Glass	8 5/8" (219)	12 5/8" (321)	16 5/8" (422)	20 5/8" (524)	22 5/8" (575)	24 5/8" (625)	26 5/8" (676)	28 5/8" (727)	30 5/8" (778)	32 5/8" (829)	36 5/8" (930)	40 5/8" (1032)

CUSTOM WIDTHS — **15 1/4"** to **95 1/4"** (largest dimensions are **95 1/4" x 71 1/4"** or **71 1/4" x 95 1/4"**)

CUSTOM HEIGHTS — **15 1/4"** to **95 1/4"**

1'-11 1/4" (591) 2'-0" (610) 15 13/16" (401)	APW1420	APW1820	APW2020	APW2420	APW2620	APW2820	APW21020	APW3020	APW3220	APW3420	APW3820	APW4020
2'-3 1/4" (692) 2'-4" (711) 19 13/16" (503)	APW1424	APW1824	APW2024	APW2424	APW2624	APW2824	APW21024	APW3024	APW3224	APW3424	APW3824	APW4024
2'-7 1/4" (794) 2'-8" (813) 23 13/16" (604)	APW1428	APW1828	APW2028	APW2428	APW2628	APW2828	APW21028	APW3028	APW3228	APW3428	APW3828	APW4028
2'-11 1/4" (895) 3'-0" (914) 27 13/16" (706)	APW1430	APW1830	APW2030	APW2430	APW2630	APW2830	APW21030	APW3030	APW3230	APW3430	APW3830	APW4030
3'-3 1/4" (997) 3'-4" (1016) 31 13/16" (808)	APW1434	APW1834	APW2034	APW2434	APW2634	APW2834	APW21034	APW3034	APW3234	APW3434	APW3834	APW4034
3'-7 1/4" (1099) 3'-8" (1118) 35 13/16" (910)	APW1438	APW1838	APW2038	APW2438	APW2638	APW2838	APW21038	APW3038	APW3238	APW3438	APW3838	APW4038
3'-11 1/4" (1200) 4'-0" (1219) 39 13/16" (1011)	APW1440	APW1840	APW2040	APW2440	APW2640	APW2840	APW21040	APW3040	APW3240	APW3440	APW3840	APW4040
4'-3 1/4" (1302) 4'-4" (1321) 43 13/16" (1113)	APW1444	APW1844	APW2044	APW2444	APW2644	APW2844	APW21044	APW3044	APW3244	APW3444	APW3844	APW4044
4'-7 1/4" (1403) 4'-8" (1422) 47 13/16" (1214)	APW1448	APW1848	APW2048	APW2448	APW2648	APW2848	APW21048	APW3048	APW3248	APW3448	APW3848	APW4048
4'-11 1/4" (1505) 5'-0" (1524) 51 13/16" (1316)	APW1450	APW1850	APW2050	APW2450	APW2650	APW2850	APW21050	APW3050	APW3250	APW3450	APW3850	APW4050
5'-3 1/4" (1607) 5'-4" (1626) 55 13/16" (1418)	APW1454	APW1854	APW2054	APW2454	APW2654	APW2854	APW21054	APW3054	APW3254	APW3454	APW3854	APW4054
5'-7 1/4" (1708) 5'-8" (1727) 59 13/16" (1519)	APW1458	APW1858	APW2058	APW2458	APW2658	APW2858	APW21058	APW3058	APW3258	APW3458	APW3858	APW4058
5'-11 1/4" (1810) 6'-0" (1829) 63 13/16" (1621)	APW1460	APW1860	APW2060	APW2460	APW2660	APW2860	APW21060	APW3060	APW3260	APW3460	APW3860	APW4060

4'-3 1/4" (1302)	4'-7 1/4" (1403)	4'-11 1/4" (1505)	5'-3 1/4" (1607)	5'-7 1/4" (1708)	5'-11 1/4" (1810)	6'-3 1/4" (1911)
4'-4" (1321)	4'-8" (1422)	5'-0" (1524)	5'-4" (1626)	5'-8" (1727)	6'-0" (1829)	6'-4" (1930)
44 5/8" (1133)	48 5/8" (1335)	52 5/8" (1337)	56 5/8" (1438)	60 5/8" (1540)	64 5/8" (1641)	68 5/8" (1743)
APW4420	APW4820	APW5020	APW5420	APW5820	APW6020	APW6420
APW4424	APW4824	APW5024	APW5424	APW5824	APW6024	APW6424
APW4428	APW4828	APW5028	APW5428	APW5828	APW6028	APW6428
APW4430	APW4830	APW5030	APW5430	APW5830	APW6030	APW6430
APW4434	APW4834	APW5034	APW5434	APW5834	APW6034	APW6434
APW4438	APW4838	APW5038	APW5438	APW5838	APW6038	APW6438
APW4440	APW4840	APW5040	APW5440	APW5840	APW6040	APW6440
APW4444	APW4844	APW5044	APW5444	APW5844	APW6044	APW6444
APW4448	APW4848	APW5048	APW5448	APW5848	APW6048	APW6448
APW4450	APW4850	APW5050	APW5450	APW5850	APW6050	APW6450
APW4454	APW4854	APW5054	APW5454	APW5854	APW6054	APW6454
APW4458	APW4858	APW5058	APW5458	APW5858	APW6058	APW6458
APW4460	APW4860	APW5060	APW5460	APW5860	APW6060	APW6460

continued on next page

Custom-size windows are available in 1/8" (3) increments. See page 65 for custom sizes and specifications.

All sizes shown are available with PG upgrade.‡

Picture window must be installed as shown and should not be rotated. Tall bottom rail is designed to align with bottom rail of double-hung and casement windows.

Grille patterns shown on page 46.
Details shown on page 51.

• "Window Dimension" always refers to outside frame-to-frame dimension.
• **"Minimum Rough Opening" dimensions may need to be increased to allow for use of building wraps, flashing, sill panning, brackets, fasteners or other items. See pages 226-227 for more details.**
• Dimensions in parentheses are in millimeters.
‡PG upgrade is not available for custom sizes equal to or less than 19 1/4" (489) wide and tall.

Table of Picture Window Sizes *(continued)*

Notes on the next page also apply to this page.

Scale 1/8" (3) = 1'-0" (305) – 1:96

Window Dimension	1'-3 1/4" (387)	1'-7 1/4" (489)	1'-11 1/4" (591)	2'-3 1/4" (692)	2'-5 1/4" (743)	2'-7 1/4" (794)	2'-9 1/4" (845)	2'-11 1/4" (895)	3'-1 1/4" (946)	3'-3 1/4" (997)	3'-7 1/4" (1099)	3'-11 1/4" (1200)
Minimum Rough Opening	1'-4" (406)	1'-8" (508)	2'-0" (610)	2'-4" (711)	2'-6" (762)	2'-8" (813)	2'-10" (864)	3'-0" (914)	3'-2" (965)	3'-4" (1016)	3'-8" (1118)	4'-0" (1219)
Unobstructed Glass	8 5/8" (219)	12 5/8" (321)	16 5/8" (422)	20 5/8" (524)	22 5/8" (575)	24 5/8" (625)	26 5/8" (676)	28 5/8" (727)	30 5/8" (778)	32 5/8" (829)	36 5/8" (930)	40 5/8" (1032)

CUSTOM WIDTHS – **15 1/4"** to **95 1/4"** (largest dimensions are **95 1/4" x 71 1/4"** or **71 1/4" x 95 1/4"**)

CUSTOM HEIGHTS – 15 1/4" to **95 1/4"**

6'-3 1/4" (1911) – 6'-4" (1930) – 67 13/16" (1722)	**APW**1464	**APW**1864	**APW**2064	**APW**2464	**APW**2664	**APW**2864	**APW**21064	**APW**3064	**APW**3264	**APW**3464	**APW**3864	**APW**4064
6'-7 1/4" (2013) – 6'-8" (2032) – 71 13/16" (1824)	**APW**1468	**APW**1868	**APW**2068	**APW**2468	**APW**2668	**APW**2868	**APW**21068	**APW**3068	**APW**3268	**APW**3468	**APW**3868	**APW**4068
7'-3 1/4" (2216) – 7'-4" (2235) – 79 13/16" (2027)	**APW**1474	**APW**1874	**APW**2074	**APW**2474	**APW**2674	**APW**2874	**APW**21074	**APW**3074	**APW**3274	**APW**3474	**APW**3874	**APW**4074
7'-11 1/4" (2419) – 8'-0" (2438) – 87 13/16" (2230)	**APW**1480	**APW**1880	**APW**2080	**APW**2480	**APW**2680	**APW**2880	**APW**21080	**APW**3080	**APW**3280	**APW**3480	**APW**3880	**APW**4080

- "Window Dimension" always refers to outside frame-to-frame dimension.
- "**Minimum Rough Opening**" **dimensions may need to be increased to allow for use of building wraps, flashing, sill panning, brackets, fasteners or other items. See pages 226-227 for more details.**
- Dimensions in parentheses are in millimeters.
- PG upgrade is not available for custom sizes equal to or less than 19 1/4" (489) wide and tall.

Grille Patterns

	Queen Anne	Diamond	Prairie A	Specified Equal Light with Simulated Check Rail	Colonial	Modified Colonial	Modified Colonial with Simulated Check Rail	Tall Fractional	Tall Fractional with Simulated Check Rail	Short Fractional	Short Fractional with Simulated Check Rail
Picture											

For picture window patterns that require alignment with double-hung patterns, identify the double-hung sash style (equal, cottage, reverse cottage) when ordering. **Number of lights and overall pattern varies with window size. Patterns may not be available in all configurations or sizes.** Specified equal light, specified equal light fractional and custom patterns are also available. For more grille options, see page 19 or visit **andersenwindows.com/grilles**.

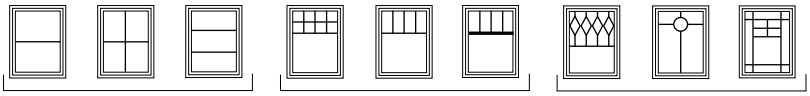

Specified Equal Light Examples — Specified Equal Light Fractional* Examples — Custom Examples

*Bottom horizontal bar located at center or at custom dimensions.

4'-3 1/4" (1302)	4'-7 1/4" (1403)	4'-11 1/4" (1505)	5'-3 1/4" (1607)	5'-7 1/4" (1708)	5'-11 1/4" (1810)
4'-4" (1321)	4'-8" (1422)	5'-0" (1524)	5'-4" (1626)	5'-8" (1727)	6'-0" (1829)
44 5/8" (1133)	48 5/8" (1335)	52 5/8" (1337)	56 5/8" (1438)	60 5/8" (1540)	64 5/8" (1641)

continued on next page

Custom-size windows are available in 1/8" (3) increments. See page 65 for custom sizes and specifications.

All sizes shown are available with PG upgrade.‡

Picture window must be installed as shown and should not be rotated. Tall bottom rail is designed to align with bottom rail of double-hung and casement windows.

Grille patterns shown on page 46.
Details shown on page 51.

• "Window Dimension" always refers to outside frame-to-frame dimension.
• "**Minimum Rough Opening**" **dimensions may need to be increased to allow for use of building wraps, flashing, sill panning, brackets, fasteners or other items. See pages 226-227 for more details.**
• Dimensions in parentheses are in millimeters.
‡PG upgrades is not available for custom sizes equal to or less than 19 1/4" (489) wide and tall.
*Tempered glass required. Some visual distortion may occur.

Table of Picture Window Sizes *(continued)*

Scale 1/8" (3) = 1'-0" (305) – 1:96

Window Dimension	6'-7 1/4" (2013)	6'-11 1/4" (2115)	7'-3 1/4" (2216)	7'-7 1/4" (2318)	7'-11 1/4" (2419)
Minimum Rough Opening	6'-8" (2032)	7'-0" (2133)	7'-4" (2235)	7'-8" (2336)	8'-0" (2438)
Unobstructed Glass	72 5/8" (1845)	76 5/8" (1946)	80 5/8" (2048)	84 5/8" (2149)	88 5/8" (2251)

CUSTOM WIDTHS – 15 1/4" to **95 1/4"** (largest dimensions are **95 1/4" x 71 1/4"** or **71 1/4" x 95 1/4"**)

CUSTOM HEIGHTS – 15 1/4" to **95 1/4"**

1'-11 1/4" (591)	2'-0" (610)	15 13/16" (401)	**APW**6820	**APW**7020	**APW**7420	**APW**7820	**APW**8020
2'-3 1/4" (692)	2'-4" (711)	19 13/16" (503)	**APW**6824	**APW**7024	**APW**7424	**APW**7824	**APW**8024
2'-7 1/4" (794)	2'-8" (813)	23 13/16" (604)	**APW**6828	**APW**7028	**APW**7428	**APW**7828	**APW**8028
2'-11 1/4" (895)	3'-0" (914)	27 13/16" (706)	**APW**6830	**APW**7030	**APW**7430	**APW**7830	**APW**8030
3'-3 1/4" (997)	3'-4" (1016)	31 13/16" (808)	**APW**6834	**APW**7034	**APW**7434	**APW**7834	**APW**8034
3'-7 1/4" (1099)	3'-8" (1118)	35 13/16" (910)	**APW**6838	**APW**7038	**APW**7438	**APW**7838	**APW**8038
3'-11 1/4" (1200)	4'-0" (1219)	39 13/16" (1011)	**APW**6840	**APW**7040	**APW**7440	**APW**7840	**APW**8040
4'-3 1/4" (1302)	4'-4" (1321)	43 13/16" (1113)	**APW**6844	**APW**7044	**APW**7444	**APW**7844	**APW**8044
4'-7 1/4" (1403)	4'-8" (1422)	47 13/16" (1214)	**APW**6848	**APW**7048	**APW**7448	**APW**7848	**APW**8048
4'-11 1/4" (1505)	5'-0" (1524)	51 13/16" (1316)	**APW**6850	**APW**7050	**APW**7450	**APW**7850	**APW**8050*
5'-3 1/4" (1607)	5'-4" (1626)	55 13/16" (1418)	**APW**6854	**APW**7054	**APW**7454	**APW**7854*	**APW**8054*
5'-7 1/4" (1708)	5'-8" (1727)	59 13/16" (1519)	**APW**6858	**APW**7058	**APW**7458*	**APW**7858*	**APW**8058*
5'-11 1/4" (1810)	6'-0" (1829)	63 13/16" (1621)	**APW**6860	**APW**7060*	**APW**7460*	**APW**7860*	**APW**8060*

Custom-size windows are available in 1/8" (3) increments. See page 65 for custom sizes and specifications.

All sizes shown are available with PG upgrade.‡

Picture window must be installed as shown and should not be rotated. Tall bottom rail is designed to align with bottom rail of double-hung and casement windows.

Grille patterns shown on page 46. Details shown on page 51.

- "Window Dimension" always refers to outside frame-to-frame dimension.
- "**Minimum Rough Opening**" **dimensions may need to be increased to allow for use of building wraps, flashing, sill panning, brackets, fasteners or other items. See pages 226-227 for more details.**
- Dimensions in parentheses are in millimeters.

‡PG upgrade is not available for custom sizes equal to or less than 19 1/4" (489) wide and tall.

*Tempered glass required. Some visual distortion may occur.

Picture Window Area Specifications

Window Number	Glass Area Sq. Ft./(m²)		Overall Window Area Sq. Ft./(m²)	
APW1420	0.94	(0.09)	2.46	(0.23)
APW1424	1.18	(0.11)	2.89	(0.27)
APW1428	1.42	(0.13)	3.31	(0.31)
APW1430	1.66	(0.15)	3.73	(0.35)
APW1434	1.90	(0.18)	4.16	(0.39)
APW1438	2.14	(0.20)	4.58	(0.43)
APW1440	2.38	(0.22)	5.00	(0.46)
APW1444	2.62	(0.24)	5.43	(0.50)
APW1448	2.85	(0.26)	5.85	(0.54)
APW1450	3.09	(0.29)	6.27	(0.58)
APW1454	3.33	(0.31)	6.70	(0.62)
APW1458	3.57	(0.33)	7.12	(0.66)
APW1460	3.81	(0.35)	7.55	(0.70)
APW1464	4.05	(0.38)	7.97	(0.74)
APW1468	4.29	(0.40)	8.39	(0.78)
APW1474	4.77	(0.44)	9.24	(0.86)
APW1480	5.24	(0.49)	10.09	(0.94)
APW1820	1.38	(0.13)	3.11	(0.29)
APW1824	1.73	(0.16)	3.64	(0.34)
APW1828	2.08	(0.19)	4.18	(0.39)
APW1830	2.43	(0.23)	4.71	(0.44)
APW1834	2.78	(0.26)	5.25	(0.49)
APW1838	3.13	(0.29)	5.78	(0.54)
APW1840	3.48	(0.32)	6.32	(0.59)
APW1844	3.83	(0.36)	6.85	(0.64)
APW1848	4.18	(0.39)	7.39	(0.69)
APW1850	4.53	(0.42)	7.92	(0.74)
APW1854	4.88	(0.45)	8.46	(0.79)
APW1858	5.23	(0.49)	8.99	(0.84)
APW1860	5.58	(0.52)	9.52	(0.88)
APW1864	5.93	(0.55)	10.06	(0.93)
APW1868	6.28	(0.58)	10.59	(0.98)
APW1874	6.98	(0.65)	11.66	(1.08)
APW1880	7.68	(0.71)	12.73	(1.18)
APW2020	1.82	(0.17)	3.75	(0.35)
APW2024	2.28	(0.21)	4.40	(0.41)
APW2028	2.74	(0.25)	5.05	(0.47)
APW2030	3.20	(0.30)	5.69	(0.53)
APW2034	3.67	(0.34)	6.34	(0.59)
APW2038	4.13	(0.38)	6.98	(0.65)
APW2040	4.59	(0.43)	7.63	(0.71)
APW2044	5.05	(0.47)	8.27	(0.77)
APW2048	5.51	(0.51)	8.92	(0.83)
APW2050	5.97	(0.55)	9.57	(0.89)
APW2054	6.43	(0.60)	10.21	(0.95)
APW2058	6.89	(0.64)	10.86	(1.01)
APW2060	7.35	(0.68)	11.50	(1.07)
APW2064	7.82	(0.73)	12.15	(1.13)
APW2068	8.28	(0.77)	12.80	(1.19)
APW2074	9.20	(0.85)	14.09	(1.31)
APW2080	10.12	(0.94)	15.38	(1.43)
APW2420	2.26	(0.21)	4.40	(0.41)
APW2424	2.83	(0.26)	5.16	(0.48)
APW2428	3.40	(0.32)	5.91	(0.55)
APW2430	3.98	(0.37)	6.67	(0.62)
APW2434	4.55	(0.42)	7.43	(0.69)
APW2438	5.12	(0.48)	8.18	(0.76)
APW2440	5.69	(0.53)	8.94	(0.83)
APW2444	6.27	(0.58)	9.70	(0.90)
APW2448	6.84	(0.64)	10.46	(0.97)
APW2450	7.41	(0.69)	11.21	(1.04)

Window Number	Glass Area Sq. Ft./(m²)		Overall Window Area Sq. Ft./(m²)	
APW2454	7.98	(0.74)	11.97	(1.11)
APW2458	8.55	(0.79)	12.73	(1.18)
APW2460	9.13	(0.85)	13.48	(1.25)
APW2464	9.70	(0.90)	14.24	(1.32)
APW2468	10.27	(0.95)	15.00	(1.39)
APW2474	11.42	(1.06)	16.51	(1.53)
APW2480	12.56	(1.17)	18.02	(1.67)
APW2620	2.48	(0.23)	4.72	(0.44)
APW2624	3.11	(0.29)	5.54	(0.51)
APW2628	3.74	(0.35)	6.35	(0.59)
APW2630	4.36	(0.41)	7.16	(0.67)
APW2634	4.99	(0.46)	7.97	(0.74)
APW2638	5.62	(0.52)	8.79	(0.82)
APW2640	6.25	(0.58)	9.60	(0.89)
APW2644	6.87	(0.64)	10.41	(0.97)
APW2648	7.50	(0.70)	11.22	(1.04)
APW2650	8.13	(0.76)	12.04	(1.12)
APW2654	8.76	(0.81)	12.85	(1.19)
APW2658	9.39	(0.87)	13.66	(1.27)
APW2660	10.01	(0.93)	14.47	(1.34)
APW2664	10.64	(0.99)	15.29	(1.42)
APW2668	11.27	(1.05)	16.10	(1.50)
APW2674	12.52	(1.16)	17.72	(1.65)
APW2680	13.78	(1.28)	19.35	(1.80)
APW2820	2.70	(0.25)	5.05	(0.47)
APW2824	3.38	(0.31)	5.91	(0.55)
APW2828	4.07	(0.38)	6.78	(0.63)
APW2830	4.75	(0.44)	7.65	(0.71)
APW2834	5.43	(0.50)	8.52	(0.79)
APW2838	6.12	(0.57)	9.39	(0.87)
APW2840	6.80	(0.63)	10.25	(0.95)
APW2844	7.48	(0.69)	11.12	(1.03)
APW2848	8.17	(0.76)	11.99	(1.11)
APW2850	8.85	(0.82)	12.86	(1.19)
APW2854	9.53	(0.89)	13.73	(1.28)
APW2858	10.22	(0.95)	14.59	(1.36)
APW2860	10.90	(1.01)	15.46	(1.44)
APW2864	11.58	(1.08)	16.33	(1.52)
APW2868	12.27	(1.14)	17.20	(1.60)
APW2874	13.63	(1.27)	18.93	(1.76)
APW2880	15.00	(1.39)	20.67	(1.92)
APW21020	2.92	(0.27)	5.37	(0.50)
APW21024	3.66	(0.34)	6.29	(0.58)
APW21024	3.66	(0.34)	6.29	(0.58)
APW21028	4.40	(0.41)	7.22	(0.67)
APW21030	5.14	(0.48)	8.14	(0.76)
APW21034	5.87	(0.55)	9.06	(0.84)
APW21038	6.61	(0.61)	9.99	(0.93)
APW21040	7.35	(0.68)	10.91	(1.01)
APW21044	8.09	(0.75)	11.83	(1.10)
APW21048	8.83	(0.82)	12.76	(1.19)
APW21050	9.57	(0.89)	13.68	(1.27)
APW21054	10.31	(0.96)	14.60	(1.36)
APW21058	11.05	(1.03)	15.53	(1.44)
APW21060	11.79	(1.10)	16.45	(1.53)
APW21064	12.52	(1.16)	17.38	(1.61)
APW21068	13.26	(1.23)	18.30	(1.70)
APW21074	14.74	(1.37)	20.15	(1.87)
APW21080	16.22	(1.51)	21.99	(2.04)
APW3020	3.14	(0.29)	5.69	(0.53)
APW3024	3.93	(0.37)	6.67	(0.62)

Window Number	Glass Area Sq. Ft./(m²)		Overall Window Area Sq. Ft./(m²)	
APW3028	4.73	(0.44)	7.65	(0.71)
APW3030	5.52	(0.51)	8.63	(0.80)
APW3034	6.32	(0.59)	9.61	(0.89)
APW3038	7.11	(0.66)	10.59	(0.98)
APW3040	7.90	(0.73)	11.57	(1.07)
APW3044	8.70	(0.81)	12.55	(1.17)
APW3044	8.70	(0.81)	12.55	(1.17)
APW3048	9.49	(0.88)	13.52	(1.26)
APW3050	10.29	(0.96)	14.50	(1.35)
APW3054	11.08	(1.03)	15.48	(1.44)
APW3058	11.88	(1.10)	16.46	(1.53)
APW3060	12.67	(1.18)	17.44	(1.62)
APW3064	13.47	(1.25)	18.42	(1.71)
APW3068	14.26	(1.32)	19.40	(1.80)
APW3074	15.85	(1.47)	21.36	(1.98)
APW3080	17.44	(1.62)	23.32	(2.17)
APW3220	3.36	(0.31)	6.01	(0.56)
APW3224	4.21	(0.39)	7.05	(0.65)
APW3228	5.06	(0.47)	8.08	(0.75)
APW3230	5.91	(0.55)	9.12	(0.85)
APW3234	6.76	(0.63)	10.15	(0.94)
APW3238	7.61	(0.71)	11.19	(1.04)
APW3240	8.46	(0.79)	12.22	(1.14)
APW3244	9.31	(0.86)	13.26	(1.23)
APW3248	10.16	(0.94)	14.29	(1.33)
APW3250	11.01	(1.02)	15.33	(1.42)
APW3254	11.86	(1.10)	16.36	(1.52)
APW3258	12.71	(1.18)	17.40	(1.62)
APW3260	13.56	(1.26)	18.43	(1.71)
APW3264	14.41	(1.34)	19.47	(1.81)
APW3268	15.26	(1.42)	20.50	(1.90)
APW3274	16.96	(1.58)	22.57	(2.10)
APW3280	18.66	(1.73)	24.64	(2.29)
APW3420	3.58	(0.33)	6.34	(0.59)
APW3424	4.48	(0.42)	7.43	(0.69)
APW3428	5.39	(0.50)	8.52	(0.79)
APW3430	6.29	(0.58)	9.61	(0.89)
APW3434	7.20	(0.67)	10.70	(0.99)
APW3438	8.10	(0.75)	11.79	(1.10)
APW3440	9.01	(0.84)	12.88	(1.20)
APW3444	9.92	(0.92)	13.97	(1.30)
APW3448	10.82	(1.01)	15.06	(1.40)
APW3450	11.73	(1.09)	16.15	(1.50)
APW3454	12.63	(1.17)	17.24	(1.60)
APW3458	13.54	(1.26)	18.33	(1.70)
APW3460	14.44	(1.34)	19.42	(1.80)
APW3464	15.35	(1.43)	20.51	(1.91)
APW3468	16.25	(1.51)	21.60	(2.01)
APW3474	18.07	(1.68)	23.78	(2.21)
APW3480	19.88	(1.85)	25.96	(2.41)
APW3820	4.02	(0.37)	6.98	(0.65)
APW3824	5.03	(0.47)	8.18	(0.76)
APW3828	6.05	(0.56)	9.39	(0.87)
APW3830	7.07	(0.66)	10.59	(0.98)
APW3834	8.08	(0.75)	11.79	(1.10)
APW3838	9.10	(0.85)	12.99	(1.21)
APW3840	10.12	(0.94)	14.19	(1.32)
APW3844	11.13	(1.03)	15.39	(1.43)
APW3848	12.15	(1.13)	16.59	(1.54)
APW3850	13.17	(1.22)	17.80	(1.65)

• Dimensions in parentheses are in square meters.

continued on next page

Picture Window Area Specifications *(continued)*

Window Number	Glass Area Sq. Ft./(m²)		Overall Window Area Sq. Ft./(m²)	
APW3854	14.18	(1.32)	19.00	(1.77)
APW3858	15.20	(1.41)	20.20	(1.88)
APW3860	16.22	(1.51)	21.40	(1.99)
APW3864	17.23	(1.60)	22.60	(2.10)
APW3868	18.25	(1.70)	23.80	(2.21)
APW3874	20.28	(1.88)	26.21	(2.43)
APW3880	22.32	(2.07)	28.61	(2.66)
APW4020	4.45	(0.41)	7.63	(0.71)
APW4024	5.58	(0.52)	8.94	(0.83)
APW4028	6.71	(0.62)	10.25	(0.95)
APW4030	7.84	(0.73)	11.57	(1.07)
APW4034	8.97	(0.83)	12.88	(1.20)
APW4038	10.09	(0.94)	14.19	(1.32)
APW4040	11.22	(1.04)	15.50	(1.44)
APW4044	12.35	(1.15)	16.82	(1.56)
APW4048	13.48	(1.25)	18.13	(1.68)
APW4050	14.60	(1.36)	19.44	(1.81)
APW4054	15.73	(1.46)	20.75	(1.93)
APW4058	16.86	(1.57)	22.07	(2.05)
APW4060	17.99	(1.67)	23.38	(2.17)
APW4064	19.12	(1.78)	24.69	(2.29)
APW4068	20.24	(1.88)	26.00	(2.42)
APW4074	22.50	(2.09)	28.63	(2.66)
APW4080	24.75	(2.30)	31.25	(2.90)
APW4420	4.89	(0.45)	8.27	(0.77)
APW4424	6.13	(0.57)	9.70	(0.90)
APW4428	7.37	(0.68)	11.12	(1.03)
APW4430	8.61	(0.80)	12.55	(1.17)
APW4434	9.85	(0.92)	13.97	(1.30)
APW4438	11.09	(1.03)	15.39	(1.43)
APW4440	12.33	(1.15)	16.82	(1.56)
APW4444	13.57	(1.26)	18.24	(1.69)
APW4448	14.80	(1.37)	19.66	(1.83)
APW4450	16.04	(1.49)	21.09	(1.96)
APW4454	17.28	(1.61)	22.51	(2.09)
APW4458	18.52	(1.72)	23.93	(2.22)
APW4460	19.76	(1.84)	25.36	(2.36)
APW4464	21.00	(1.95)	26.78	(2.49)
APW4468	22.24	(2.07)	28.21	(2.62)
APW4474	24.72	(2.30)	31.05	(2.88)
APW4480	27.19	(2.53)	33.90	(3.15)
APW4820	5.33	(0.50)	8.92	(0.83)
APW4824	6.68	(0.62)	10.46	(0.97)
APW4828	8.03	(0.75)	11.99	(1.11)
APW4830	9.38	(0.87)	13.52	(1.26)
APW4834	10.73	(1.00)	15.06	(1.40)
APW4838	12.08	(1.12)	16.59	(1.54)
APW4840	13.43	(1.25)	18.13	(1.68)
APW4844	14.78	(1.37)	19.66	(1.83)
APW4848	16.13	(1.50)	21.20	(1.97)
APW4850	17.48	(1.62)	22.73	(2.11)
APW4854	18.83	(1.75)	24.27	(2.25)
APW4858	20.18	(1.87)	25.80	(2.40)
APW4860	21.53	(2.00)	27.34	(2.54)
APW4864	22.88	(2.13)	28.87	(2.68)
APW4868	24.23	(2.25)	30.41	(2.83)
APW4874	26.93	(2.50)	33.48	(3.11)
APW4880	29.63	(2.75)	36.55	(3.40)
APW5020	5.77	(0.54)	9.57	(0.89)
APW5024	7.23	(0.67)	11.21	(1.04)
APW5028	8.69	(0.81)	12.86	(1.19)

Window Number	Glass Area Sq. Ft./(m²)		Overall Window Area Sq. Ft./(m²)	
APW5030	10.15	(0.94)	14.50	(1.35)
APW5034	11.62	(1.08)	16.15	(1.50)
APW5038	13.08	(1.22)	17.80	(1.65)
APW5040	14.54	(1.35)	19.44	(1.81)
APW5044	16.00	(1.49)	21.09	(1.96)
APW5048	17.46	(1.62)	22.73	(2.11)
APW5050	18.92	(1.76)	24.38	(2.26)
APW5054	20.38	(1.89)	26.02	(2.42)
APW5058	21.84	(2.03)	27.67	(2.57)
APW5060	23.30	(2.16)	29.32	(2.72)
APW5064	24.77	(2.30)	30.96	(2.88)
APW5068	26.23	(2.44)	32.61	(3.03)
APW5074	29.15	(2.71)	35.90	(3.34)
APW5080	32.07	(2.98)	39.19	(3.64)
APW5420	6.21	(0.58)	10.21	(0.95)
APW5424	7.78	(0.72)	11.97	(1.11)
APW5428	9.35	(0.87)	13.73	(1.28)
APW5430	10.93	(1.02)	15.48	(1.44)
APW5434	12.50	(1.16)	17.24	(1.60)
APW5438	14.07	(1.31)	19.00	(1.77)
APW5440	15.64	(1.45)	20.75	(1.93)
APW5444	17.22	(1.60)	22.51	(2.09)
APW5448	18.79	(1.75)	24.27	(2.25)
APW5450	20.36	(1.89)	26.02	(2.42)
APW5454	21.93	(2.04)	27.78	(2.58)
APW5458	23.50	(2.18)	29.54	(2.74)
APW5460	25.08	(2.33)	31.30	(2.91)
APW5464	26.65	(2.48)	33.05	(3.07)
APW5468	28.22	(2.62)	34.81	(3.23)
APW5474	31.37	(2.91)	38.32	(3.56)
APW5480	34.51	(3.21)	41.84	(3.89)
APW5820	6.65	(0.62)	10.86	(1.01)
APW5824	8.33	(0.77)	12.73	(1.18)
APW5828	10.02	(0.93)	14.59	(1.36)
APW5830	11.70	(1.09)	16.46	(1.53)
APW5834	13.38	(1.24)	18.33	(1.70)
APW5838	15.07	(1.40)	20.20	(1.88)
APW5840	16.75	(1.56)	22.07	(2.05)
APW5844	18.43	(1.71)	23.93	(2.22)
APW5848	20.12	(1.87)	25.80	(2.40)
APW5850	21.80	(2.03)	27.67	(2.57)
APW5854	23.48	(2.18)	29.54	(2.74)
APW5858	25.17	(2.34)	31.41	(2.92)
APW5860	26.85	(2.49)	33.27	(3.09)
APW5864	28.53	(2.65)	35.14	(3.26)
APW5868	30.22	(2.81)	37.01	(3.44)
APW5874	33.58	(3.12)	40.75	(3.79)
APW5880	36.95	(3.43)	44.48	(4.13)
APW6020	7.09	(0.66)	11.50	(1.07)
APW6024	8.88	(0.82)	13.48	(1.25)
APW6028	10.68	(0.99)	15.46	(1.44)
APW6030	12.47	(1.16)	17.44	(1.62)
APW6034	14.27	(1.33)	19.42	(1.80)
APW6038	16.06	(1.49)	21.40	(1.99)
APW6040	17.85	(1.66)	23.38	(2.17)
APW6044	19.65	(1.83)	25.36	(2.36)
APW6048	21.44	(1.99)	27.34	(2.54)
APW6050	23.24	(2.16)	29.32	(2.72)
APW6054	25.03	(2.33)	31.30	(2.91)
APW6058	26.83	(2.49)	33.27	(3.09)
APW6060	28.62	(2.66)	35.25	(3.27)

Window Number	Glass Area Sq. Ft./(m²)		Overall Window Area Sq. Ft./(m²)	
APW6064	30.42	(2.83)	37.23	(3.46)
APW6068	32.21	(2.99)	39.21	(3.64)
APW6074	35.80	(3.33)	43.17	(4.01)
APW6080	39.39	(3.66)	47.13	(4.38)
APW6420	7.53	(0.70)	12.15	(1.13)
APW6424	9.43	(0.88)	14.24	(1.32)
APW6428	11.34	(1.05)	16.33	(1.52)
APW6430	13.24	(1.23)	18.42	(1.71)
APW6434	15.15	(1.41)	20.51	(1.91)
APW6438	17.05	(1.58)	22.60	(2.10)
APW6440	18.96	(1.76)	24.69	(2.29)
APW6444	20.87	(1.94)	26.78	(2.49)
APW6448	22.77	(2.12)	28.87	(2.68)
APW6450	24.68	(2.29)	30.96	(2.88)
APW6454	26.58	(2.47)	33.05	(3.07)
APW6458	28.49	(2.65)	35.14	(3.26)
APW6460	30.39	(2.82)	37.23	(3.46)
APW6820	7.97	(0.74)	12.80	(1.19)
APW6824	9.98	(0.98)	15.00	(1.39)
APW6828	12.00	(1.11)	17.20	(1.60)
APW6830	14.02	(1.30)	19.40	(1.80)
APW6834	16.03	(1.49)	21.60	(2.01)
APW6838	18.05	(1.68)	23.80	(2.21)
APW6840	20.07	(1.86)	26.00	(2.42)
APW6844	22.08	(2.05)	28.20	(2.62)
APW6848	24.10	(2.24)	30.40	(2.82)
APW6850	26.12	(2.43)	32.61	(3.03)
APW6854	28.13	(2.61)	34.81	(3.23)
APW6858	30.15	(2.80)	37.01	(3.44)
APW6860	32.17	(2.99)	39.21	(3.64)
APW7020	8.40	(0.78)	13.44	(1.25)
APW7024	10.53	(0.98)	15.75	(1.46)
APW7028	12.66	(1.18)	18.07	(1.68)
APW7030	14.79	(1.37)	20.38	(1.89)
APW7034	16.92	(1.57)	22.69	(2.11)
APW7038	19.04	(1.77)	25.00	(2.32)
APW7040	21.17	(1.97)	27.32	(2.54)
APW7044	23.30	(2.16)	29.63	(2.75)
APW7048	25.43	(2.36)	31.94	(2.97)
APW7050	27.55	(2.56)	34.25	(3.18)
APW7054	29.68	(2.76)	36.57	(3.40)
APW7058	31.81	(2.96)	38.88	(3.61)
APW7060	33.94	(3.15)	41.19	(3.83)
APW7420	8.84	(0.82)	14.09	(1.31)
APW7424	11.08	(1.03)	16.51	(1.53)
APW7428	13.32	(1.24)	18.93	(1.76)
APW7430	15.56	(1.45)	21.36	(1.98)
APW7434	17.80	(1.65)	23.78	(2.21)
APW7438	20.04	(1.86)	26.21	(2.43)
APW7440	22.28	(2.07)	28.63	(2.66)
APW7444	24.52	(2.28)	31.05	(2.88)
APW7448	26.75	(2.49)	33.48	(3.11)
APW7450	29.00	(2.69)	35.90	(3.34)
APW7454	31.23	(2.90)	38.32	(3.56)
APW7458	33.47	(3.11)	40.75	(3.79)
APW7460	35.71	(3.32)	43.17	(4.01)
APW7820	9.28	(0.86)	14.73	(1.37)
APW7824	11.63	(1.08)	17.26	(1.60)
APW7828	13.98	(1.30)	19.80	(1.84)

• Dimensions in parentheses are in square meters.

continued on next page

Picture Window Area Specifications *(continued)*

Window Number	Glass Area Sq. Ft./(m²)		Overall Window Area Sq. Ft./(m²)	
APW7830	16.33	(1.52)	22.34	(2.08)
APW7834	18.68	(1.74)	24.87	(2.31)
APW7838	21.03	(1.95)	27.41	(2.55)
APW7840	23.38	(2.17)	29.94	(2.78)
APW7844	25.73	(2.39)	32.48	(3.02)
APW7848	28.08	(2.61)	35.01	(3.25)
APW7850	30.43	(2.83)	37.55	(3.49)
APW7854	32.78	(3.05)	40.08	(3.72)
APW7858	35.13	(3.26)	42.62	(3.96)
APW7860	37.48	(3.48)	45.15	(4.19)
APW8020	9.72	(0.90)	15.38	(1.43)
APW8024	12.18	(1.13)	18.02	(1.67)
APW8028	14.64	(1.36)	20.67	(1.92)
APW8030	17.10	(1.59)	23.32	(2.17)
APW8034	19.57	(1.82)	25.96	(2.41)
APW8038	22.03	(2.05)	28.61	(2.66)
APW8040	24.49	(2.28)	31.25	(2.90)
APW8044	26.95	(2.50)	33.90	(3.15)
APW8048	29.41	(2.73)	36.55	(3.40)
APW8050	31.87	(2.96)	39.19	(3.64)
APW8054	34.33	(3.19)	41.84	(3.89)
APW8058	36.79	(3.42)	44.48	(4.13)
APW8060	39.25	(3.65)	47.13	(4.38)

• Dimensions in parentheses are in square meters.

Picture Window Details

Scale 1 1/2" (38) = 1'-0" (305) – 1:8

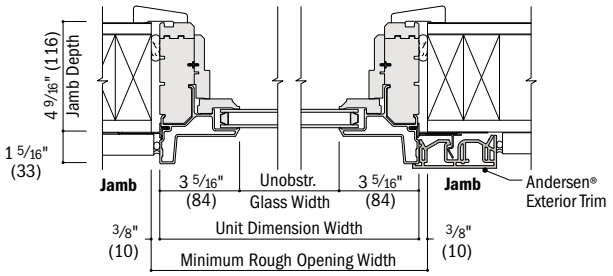

Horizontal Section

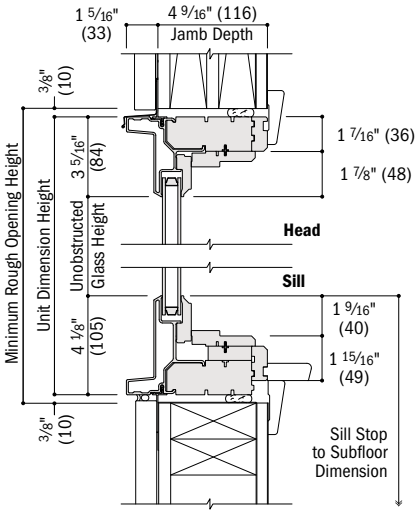

Vertical Section

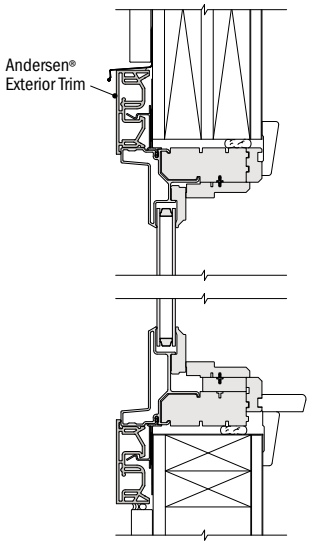

Vertical Section

See pages 60-62 for joining details.

• 4 9/16" (116) base jamb depth measurement is from back side of installation flange.
• Light-colored areas are parts included with window. Dark-colored areas are additional Andersen® parts required to complete window assembly as shown.
• Dimensions in parentheses are in millimeters.
• **Minimum rough openings may need to be increased to allow for use of building wraps, flashing, sill panning, brackets, fasteners or other items. See installation information on pages 226-227.**
• Details are for illustration only and are not intended to represent product installation methods or materials. Refer to product installation instructions at andersenwindows.com.

Table of Transom Window Sizes

Scale ⅛" (3) = 1'-0" (305) — 1:96

Notes on the next page also apply to this page.

Unit Dimension	1'-3 1/4" (387)	1'-7 1/4" (489)	1'-11 1/4" (591)	2'-3 1/4" (692)	2'-5 1/4" (743)	2'-7 1/4" (794)	2'-9 1/4" (845)	2'-11 1/4" (895)	3'-1 1/4" (946)	3'-3 1/4" (997)	3'-7 1/4" (1099)	3'-11 1/4" (1200)
Minimum Rough Opening	1'-4" (406)	1'-8" (508)	2'-0" (610)	2'-4" (711)	2'-6" (762)	2'-8" (813)	2'-10" (864)	3'-0" (914)	3'-2" (965)	3'-4" (1016)	3'-8" (1118)	4'-0" (1219)
Unobstructed Glass	8 5/8" (219)	12 5/8" (321)	16 5/8" (422)	20 5/8" (524)	22 5/8" (575)	24 5/8" (625)	26 5/8" (676)	28 5/8" (727)	30 5/8" (778)	32 5/8" (829)	36 5/8" (930)	40 5/8" (1032)

CUSTOM WIDTHS — fixed **15 1/4"** to **95 1/4"** (largest dimensions are **95 1/4" x 71 1/4"** or **71 1/4" x 95 1/4"**)

CUSTOM HEIGHTS — fixed **11 1/4"** to **95 1/4"**

CUSTOM SIZES AVAILABLE — venting

11 1/4" (286)	1'-0" (305)	4 5/8" (117)	ATF1410	ATF1810	ATF2010	ATF2410	ATF2610	ATF2810	ATF21010	ATF3010	ATF3210	ATF3410	ATF3810	ATF4010
1'-3 1/4" (387)	1'-4" (406)	8 5/8" (219)	ATF1414	ATF1814	ATF2014	ATF2414	ATF2614	ATF2814	ATF21014	ATF3014	ATF3214	ATF3414	ATF3814	ATF4014
				ATV1814	ATV2014	ATV2414	ATV2614	ATV2814	ATV21014	ATV3014	ATV3214	ATV3414	ATV3814	ATV4014
1'-5 1/4" (438)	1'-6" (457)	10 5/8" (270)	ATF1416	ATF1816	ATF2016	ATF2416	ATF2616	ATF2816	ATF21016	ATF3016	ATF3216	ATF3416	ATF3816	ATF4016
				ATV1816	ATV2016	ATV2416	ATV2616	ATV2816	ATV21016	ATV3016	ATV3216	ATV3416	ATV3816	ATV4016
1'-7 1/4" (489)	1'-8" (508)	12 5/8" (321)	ATF1418	ATF1818	ATF2018	ATF2418	ATF2618	ATF2818	ATF21018	ATF3018	ATF3218	ATF3418	ATF3818	ATF4018
				ATV1818	ATV2018	ATV2418	ATV2618	ATV2818	ATV21018	ATV3018	ATV3218	ATV3418	ATV3818	ATV4018
1'-9 1/4" (540)	1'-10" (559)	14 5/8" (371)	ATF14110	ATF18110	ATF20110	ATF24110	ATF26110	ATF28110	ATF210110	ATF30110	ATF32110	ATF34110	ATF38110	ATF40110
				ATV18110	ATV20110	ATV24110	ATV26110	ATV28110	ATV210110	ATV30110	ATV32110	ATV34110	ATV38110	ATV40110
1'-11 1/4" (591)	2'-0" (610)	16 5/8" (422)	ATF1420	ATF1820	ATF2020	ATF2420	ATF2620	ATF2820	ATF21020	ATF3020	ATF3220	ATF3420	ATF3820	ATF4020
				ATV1820	ATV2020	ATV2420	ATV2620	ATV2820	ATV21020	ATV3020	ATV3220	ATV3420	ATV3820	ATV4020
2'-1 1/4" (641)	2'-2" (660)	18 5/8" (473)	ATF1422	ATF1822	ATF2022	ATF2422	ATF2622	ATF2822	ATF21022	ATF3022	ATF3222	ATF3422	ATF3822	ATF4022
				ATV1822	ATV2022	ATV2422	ATV2622	ATV2822	ATV21022	ATV3022	ATV3222	ATV3422	ATV3822	ATV4022
2'-3 1/4" (692)	2'-4" (711)	20 5/8" (524)	ATF1424	ATF1824	ATF2024	ATF2424	ATF2624	ATF2824	ATF21024	ATF3024	ATF3224	ATF3424	ATF3824	ATF4024
				ATV1824	ATV2024	ATV2424	ATV2624	ATV2824	ATV21024	ATV3024	ATV3224	ATV3424	ATV3824	ATV4024
2'-5 1/4" (743)	2'-6" (762)	22 5/8" (575)	ATF1426	ATF1826	ATF2026	ATF2426	ATF2626	ATF2826	ATF21026	ATF3026	ATF3226	ATF3426	ATF3826	ATF4026
				ATV1826	ATV2026	ATV2426	ATV2626	ATV2826	ATV21026	ATV3026	ATV3226	ATV3426	ATV3826	ATV4026
2'-7 1/4" (794)	2'-8" (813)	24 5/8" (625)	ATF1428	ATF1828	ATF2028	ATF2428	ATF2628	ATF2828	ATF21028	ATF3028	ATF3228	ATF3428	ATF3828	ATF4028
				ATV1828	ATV2028	ATV2428	ATV2628	ATV2828	ATV21028	ATV3028	ATV3228	ATV3428	ATV3828	ATV4028

4'-3 1/4" (1302)	4'-7 1/4" (1403)	4'-11 1/4" (1505)	5'-3 1/4" (1607)	5'-7 1/4" (1708)	5'-11 1/4" (1810)
4'-4" (1321)	4'-8" (1422)	5'-0" (1524)	5'-4" (1626)	5'-8" (1727)	6'-0" (1829)
44 5/8" (1133)	48 5/8" (1335)	52 5/8" (1337)	56 5/8" (1438)	60 5/8" (1540)	64 5/8" (1641)
ATF4410	**ATF**4810	**ATF**5010	**ATF**5410	**ATF**5810	**ATF**6010
ATF4414	**ATF**4814	**ATF**5014	**ATF**5414	**ATF**5814	**ATF**6014
ATV4414	**ATV**4814	**ATV**5014	**ATV**5414	**ATV**5814	**ATV**6014
ATF4416	**ATF**4816	**ATF**5016	**ATF**5416	**ATF**5816	**ATF**6016
ATV4416	**ATV**4816	**ATV**5016	**ATV**5416	**ATV**5816	**ATV**6016
ATF4418	**ATF**4818	**ATF**5018	**ATF**5418	**ATF**5818	**ATF**6018
ATV4418	**ATV**4818	**ATV**5018	**ATV**5418	**ATV**5818	**ATV**6018
ATF44110	**ATF**48110	**ATF**50110	**ATF**54110	**ATF**58110	**ATF**60110
ATV44110	**ATV**48110	**ATV**50110	**ATV**54110	**ATV**58110	**ATV**60110
ATF4420	**ATF**4820	**ATF**5020	**ATF**5420	**ATF**5820	**ATF**6020
ATV4420	**ATV**4820	**ATV**5020	**ATV**5420	**ATV**5820	**ATV**6020
ATF4422	**ATF**4822	**ATF**5022	**ATF**5422	**ATF**5822	**ATF**6022
ATV4422	**ATV**4822	**ATV**5022	**ATV**5422	**ATV**5822	**ATV**6022
ATF4424	**ATF**4824	**ATF**5024	**ATF**5424	**ATF**5824	**ATF**6024
ATV4424	**ATV**4824	**ATV**5024	**ATV**5424	**ATV**5824	**ATV**6024
ATF4426	**ATF**4826	**ATF**5026	**ATF**5426	**ATF**5826	**ATF**6026
ATV4426	**ATV**4826	**ATV**5026	**ATV**5426	**ATV**5826	**ATV**6026
ATF4428	**ATF**4828	**ATF**5028	**ATF**5428	**ATF**5828	**ATF**6028
ATV4428	**ATV**4828	**ATV**5028	**ATV**5428	**ATV**5828	**ATV**6028

continued on next page

Custom-size windows are available in 1/8" (3) increments. See page 65 for custom sizes and specifications.

Fixed

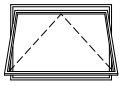

Venting

Choose fixed (**ATF**) or venting (**ATV**).

Most sizes shown are available with PG upgrade.‡

Venting window must be installed to vent as shown, and should not be rotated and used as a hopper.

Grille patterns shown on page 58.

Details shown on page 59.

- "Window Dimension" always refers to outside frame-to-frame dimension.
- "**Minimum Rough Opening**" **dimensions may need to be increased to allow for use of building wraps, flashing, sill panning, brackets, fasteners or other items. See pages 226-227 for more details.**
- Dimensions in parentheses are in millimeters.

‡PG upgrade is not available for fixed transom sizes **ATF**1410 and **ATF**1414 shown with an underscore on page 52.

Table of Transom Window Sizes *(continued)*

Notes on the next page also apply to this page.

Scale 1/8" (3) = 1'-0" (305) – 1:96

Window Dimension	1'-3 1/4" (387)	1'-7 1/4" (489)	1'-11 1/4" (591)	2'-3 1/4" (692)	2'-5 1/4" (743)	2'-7 1/4" (794)	2'-9 1/4" (845)	2'-11 1/4" (895)	3'-1 1/4" (946)	3'-3 1/4" (997)	3'-7 1/4" (1099)	3'-11 1/4" (1200)
Minimum Rough Opening	1'-4" (406)	1'-8" (508)	2'-0" (610)	2'-4" (711)	2'-6" (762)	2'-8" (813)	2'-10" (864)	3'-0" (914)	3'-2" (965)	3'-4" (1016)	3'-8" (1118)	4'-0" (1219)
Unobstructed Glass	8 5/8" (219)	12 5/8" (321)	16 5/8" (422)	20 5/8" (524)	22 5/8" (575)	24 5/8" (625)	26 5/8" (676)	28 5/8" (727)	30 5/8" (778)	32 5/8" (829)	36 5/8" (930)	40 5/8" (1032)

CUSTOM SIZES AVAILABLE

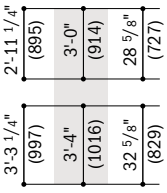

CUSTOM AVAILABLE

ATF1430	**ATF**1830	**ATF**2030	**ATF**2430	**ATF**2630	**ATF**2830	**ATF**21030	**ATF**3030	**ATF**3230	**ATF**3430	**ATF**3830	**ATF**4030

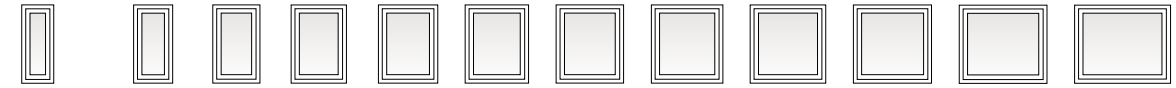

ATF1434	**ATF**1834	**ATF**2034	**ATF**2434	**ATF**2634	**ATF**2834	**ATF**21034	**ATF**3034	**ATF**3234	**ATF**3434	**ATF**3834	**ATF**4034

Fixed Transom Window Area Specifications

Window Number	Glass Area Sq. Ft./(m²)		Overall Window Area Sq. Ft./(m²)	
ATF1410	0.27	(0.03)	1.19	(0.11)
ATF1414	0.51	(0.05)	1.62	(0.15)
ATF1416	0.63	(0.06)	1.83	(0.17)
ATF1418	0.75	(0.07)	2.04	(0.19)
ATF14110	0.87	(0.08)	2.25	(0.21)
ATF1420	0.99	(0.09)	2.46	(0.23)
ATF1422	1.11	(0.10)	2.67	(0.25)
ATF1424	1.23	(0.11)	2.89	(0.27)
ATF1426	1.35	(0.13)	3.10	(0.29)
ATF1428	1.47	(0.14)	3.31	(0.31)
ATF1430	1.71	(0.16)	3.73	(0.35)
ATF1434	1.95	(0.18)	4.16	(0.39)
ATF1810	0.40	(0.04)	1.50	(0.14)
ATF1814	0.75	(0.07)	2.04	(0.19)
ATF1816	0.93	(0.09)	2.31	(0.21)
ATF1818	1.10	(0.10)	2.57	(0.24)
ATF18110	1.28	(0.12)	2.84	(0.26)
ATF1820	1.45	(0.13)	3.11	(0.29)
ATF1822	1.63	(0.15)	3.38	(0.31)
ATF1824	1.80	(0.17)	3.64	(0.34)
ATF1826	1.98	(0.18)	3.91	(0.36)
ATF1828	2.15	(0.20)	4.18	(0.39)
ATF1830	2.50	(0.23)	4.71	(0.44)
ATF1834	2.85	(0.26)	5.25	(0.49)
ATF2010	0.53	(0.05)	1.82	(0.17)
ATF2014	0.99	(0.09)	2.46	(0.23)
ATF2016	1.22	(0.11)	2.79	(0.26)
ATF2018	1.45	(0.13)	3.11	(0.29)
ATF20110	1.68	(0.16)	3.43	(0.32)
ATF2020	1.91	(0.18)	3.75	(0.35)
ATF2022	2.14	(0.20)	4.08	(0.38)
ATF2024	2.37	(0.22)	4.40	(0.41)
ATF2026	2.61	(0.24)	4.72	(0.44)
ATF2028	2.84	(0.26)	5.05	(0.47)
ATF2030	3.30	(0.31)	5.69	(0.53)
ATF2034	3.76	(0.35)	6.34	(0.59)
ATF2410	0.66	(0.06)	2.13	(0.20)
ATF2414	1.23	(0.11)	2.89	(0.27)
ATF2416	1.52	(0.14)	3.26	(0.30)
ATF2418	1.80	(0.17)	3.64	(0.34)

• Dimensions in parentheses are in square meters.

continued on next page

Venting Transom Window Opening and Area Specifications

Window Number	Clear Opening Sq. Ft./(m²)		Clear Opening in Full Open Position: Width Inches/(mm)		Clear Opening in Full Open Position: Depth Inches/(mm)		Glass Area Sq. Ft./(m²)		Vent Sq. Ft./(m²)		Top of Subfloor to Top of Inside Sill Stop Inches/(mm)		Overall Window Area Sq. Ft./(m²)	
ATV1814	0.59	(0.05)	14 5/16"	(363)	5 7/8"	(150)	0.75	(0.07)	0.59	(0.05)	69 1/2"	(1764)	2.04	(0.19)
ATV2014	0.75	(0.07)	18 5/16"	(465)	5 7/8"	(150)	0.99	(0.09)	0.75	(0.07)	69 1/2"	(1764)	2.46	(0.23)
ATV2414	0.91	(0.08)	22 5/16"	(567)	5 7/8"	(150)	1.23	(0.11)	0.91	(0.08)	69 1/2"	(1764)	2.89	(0.27)
ATV2614	0.99	(0.09)	24 5/16"	(617)	5 7/8"	(150)	1.35	(0.13)	0.99	(0.09)	69 1/2"	(1764)	3.10	(0.29)
ATV2814	1.08	(0.10)	26 5/16"	(668)	5 7/8"	(150)	1.47	(0.14)	1.08	(0.10)	69 1/2"	(1764)	3.31	(0.31)
ATV21014	1.16	(0.11)	28 5/16"	(719)	5 7/8"	(150)	1.59	(0.15)	1.16	(0.11)	69 1/2"	(1764)	3.52	(0.33)
ATV3014	1.24	(0.12)	30 5/16"	(770)	5 7/8"	(150)	1.71	(0.16)	1.24	(0.12)	69 1/2"	(1764)	3.73	(0.35)
ATV3214	1.32	(0.12)	32 5/16"	(821)	5 7/8"	(150)	1.83	(0.17)	1.32	(0.12)	69 1/2"	(1764)	3.95	(0.37)
ATV3414	1.40	(0.13)	34 5/16"	(871)	5 7/8"	(150)	1.95	(0.18)	1.40	(0.13)	69 1/2"	(1764)	4.16	(0.39)
ATV3814	1.57	(0.15)	38 5/16"	(973)	5 7/8"	(150)	2.19	(0.20)	1.57	(0.15)	69 1/2"	(1764)	4.58	(0.43)
ATV4014	1.73	(0.16)	42 5/16"	(1075)	5 7/8"	(150)	2.43	(0.23)	1.73	(0.16)	69 1/2"	(1764)	5.00	(0.46)
ATV4414	1.90	(0.18)	46 5/16"	(1176)	5 7/8"	(150)	2.66	(0.25)	1.90	(0.18)	69 1/2"	(1764)	5.43	(0.50)
ATV4814	2.06	(0.19)	50 5/16"	(1278)	5 7/8"	(150)	2.90	(0.27)	2.06	(0.19)	69 1/2"	(1764)	5.85	(0.54)
ATV5014	2.22	(0.21)	54 5/16"	(1379)	5 7/8"	(150)	3.14	(0.29)	2.22	(0.21)	69 1/2"	(1764)	6.28	(0.58)
ATV5414	2.39	(0.22)	58 5/16"	(1481)	5 7/8"	(150)	3.38	(0.31)	2.39	(0.22)	69 1/2"	(1764)	6.70	(0.62)
ATV5814	2.55	(0.24)	62 5/16"	(1538)	5 7/8"	(150)	3.62	(0.34)	2.55	(0.24)	69 1/2"	(1764)	7.12	(0.66)
ATV6014	2.71	(0.25)	66 5/16"	(1684)	5 7/8"	(150)	3.86	(0.36)	2.71	(0.25)	69 1/2"	(1764)	7.55	(0.70)
ATV1816	0.59	(0.05)	14 5/16"	(363)	5 7/8"	(150)	0.93	(0.09)	0.59	(0.05)	67 1/2"	(1714)	2.31	(0.21)
ATV2016	0.75	(0.07)	18 5/16"	(465)	5 7/8"	(150)	1.22	(0.11)	0.75	(0.07)	67 1/2"	(1714)	2.79	(0.26)
ATV2416	0.91	(0.08)	22 5/16"	(567)	5 7/8"	(150)	1.52	(0.14)	0.91	(0.08)	67 1/2"	(1714)	3.26	(0.30)
ATV2616	0.99	(0.09)	24 5/16"	(617)	5 7/8"	(150)	1.66	(0.15)	0.99	(0.09)	67 1/2"	(1714)	3.50	(0.33)
ATV2816	1.08	(0.10)	26 5/16"	(668)	5 7/8"	(150)	1.81	(0.17)	1.08	(0.10)	67 1/2"	(1714)	3.74	(0.35)
ATV21016	1.16	(0.11)	28 5/16"	(719)	5 7/8"	(150)	1.96	(0.18)	1.16	(0.11)	67 1/2"	(1714)	3.98	(0.37)
ATV3016	1.24	(0.12)	30 5/16"	(770)	5 7/8"	(150)	2.11	(0.20)	1.24	(0.12)	67 1/2"	(1714)	4.22	(0.39)
ATV3216	1.32	(0.12)	32 5/16"	(821)	5 7/8"	(150)	2.25	(0.21)	1.32	(0.12)	67 1/2"	(1714)	4.46	(0.41)
ATV3416	1.40	(0.13)	34 5/16"	(871)	5 7/8"	(150)	2.40	(0.22)	1.40	(0.13)	67 1/2"	(1714)	4.70	(0.44)
ATV3816	1.57	(0.15)	38 5/16"	(973)	5 7/8"	(150)	2.69	(0.25)	1.57	(0.15)	67 1/2"	(1714)	5.18	(0.48)
ATV4016	1.73	(0.16)	42 5/16"	(1075)	5 7/8"	(150)	2.99	(0.28)	1.73	(0.16)	67 1/2"	(1714)	5.66	(0.53)
ATV4416	1.90	(0.18)	46 5/16"	(1176)	5 7/8"	(150)	3.28	(0.30)	1.90	(0.18)	67 1/2"	(1714)	6.14	(0.57)
ATV4816	2.06	(0.19)	50 5/16"	(1278)	5 7/8"	(150)	3.58	(0.33)	2.06	(0.19)	67 1/2"	(1714)	6.62	(0.61)
ATV5016	2.22	(0.21)	54 5/16"	(1379)	5 7/8"	(150)	3.87	(0.36)	2.22	(0.21)	67 1/2"	(1714)	7.10	(0.66)
ATV5416	2.39	(0.22)	58 5/16"	(1481)	5 7/8"	(150)	4.17	(0.39)	2.39	(0.22)	67 1/2"	(1714)	7.58	(0.70)
ATV5816	2.55	(0.24)	62 5/16"	(1538)	5 7/8"	(150)	4.46	(0.41)	2.55	(0.24)	67 1/2"	(1714)	8.06	(0.75)
ATV6016	2.71	(0.25)	66 5/16"	(1684)	5 7/8"	(150)	4.76	(0.44)	2.71	(0.25)	67 1/2"	(1714)	8.54	(0.79)
ATV1818	0.59	(0.05)	14 5/16"	(363)	5 7/8"	(150)	1.10	(0.10)	0.59	(0.05)	65 1/2"	(1663)	2.57	(0.24)
ATV2018	0.75	(0.07)	18 5/16"	(465)	5 7/8"	(150)	1.45	(0.13)	0.75	(0.07)	65 1/2"	(1663)	3.11	(0.29)
ATV2418	0.91	(0.08)	22 5/16"	(567)	5 7/8"	(150)	1.80	(0.17)	0.91	(0.08)	65 1/2"	(1663)	3.64	(0.34)
ATV2618	0.99	(0.09)	24 5/16"	(617)	5 7/8"	(150)	1.98	(0.18)	0.99	(0.09)	65 1/2"	(1663)	3.91	(0.36)
ATV2818	1.08	(0.10)	26 5/16"	(668)	5 7/8"	(150)	2.15	(0.20)	1.08	(0.10)	65 1/2"	(1663)	4.18	(0.39)
ATV21018	1.16	(0.11)	28 5/16"	(719)	5 7/8"	(150)	2.33	(0.22)	1.16	(0.11)	65 1/2"	(1663)	4.45	(0.41)
ATV3018	1.24	(0.12)	30 5/16"	(770)	5 7/8"	(150)	2.50	(0.23)	1.24	(0.12)	65 1/2"	(1663)	4.71	(0.44)
ATV3218	1.32	(0.12)	32 5/16"	(821)	5 7/8"	(150)	2.68	(0.25)	1.32	(0.12)	65 1/2"	(1663)	4.98	(0.46)

• "Top of Subfloor to Top of Inside Sill Stop" is calculated based upon a structural header height of 6'-10 1/2" (2096).
• Dimensions in parentheses are in millimeters or square meters.

continued on next page

4'-3 1/4" (1302)	4'-7 1/4" (1403)	4'-11 1/4" (1505)	5'-3 1/4" (1607)	5'-7 1/4" (1708)	5'-11 1/4" (1810)
4'-4" (1321)	4'-8" (1422)	5'-0" (1524)	5'-4" (1626)	5'-8" (1727)	6'-0" (1829)
44 5/8" (1133)	48 5/8" (1335)	52 5/8" (1337)	56 5/8" (1438)	60 5/8" (1540)	64 5/8" (1641)

• "Window Dimension" always refers to outside frame-to-frame dimension.
• **"Minimum Rough Opening" dimensions may need to be increased to allow for use of building wraps, flashing, sill panning, brackets, fasteners or other items. See pages 226-227 for more details.**
• Dimensions in parentheses are in millimeters.
‡PG upgrade is not available for fixed transom sizes **ATF**1410 and **ATF**1414 shown with an underscore on page 52.

Custom-size windows are available in 1/8" (3) increments. See page 65 for custom sizes and specifications. Choose fixed (**ATF**) or venting (**ATV**). Most sizes shown are available with PG upgrade‡ Venting sizes shown on pages 52-53. Grille patterns shown on page 58. Details shown on page 59.

Fixed Transom Window Area Specifications *(continued)*

Window Number	Glass Area Sq. Ft./(m²)		Overall Window Area Sq. Ft./(m²)	
ATF24110	2.09	(0.19)	4.02	(0.37)
ATF2420	2.37	(0.22)	4.40	(0.41)
ATF2422	2.66	(0.25)	4.78	(0.44)
ATF2424	2.95	(0.27)	5.16	(0.48)
ATF2426	3.23	(0.30)	5.54	(0.51)
ATF2428	3.52	(0.33)	5.91	(0.55)
ATF2430	4.09	(0.38)	6.67	(0.62)
ATF2434	4.66	(0.43)	7.43	(0.69)
ATF2610	0.72	(0.07)	2.29	(0.21)
ATF2614	1.35	(0.13)	3.10	(0.29)
ATF2616	1.66	(0.15)	3.50	(0.33)
ATF2618	1.98	(0.18)	3.91	(0.36)
ATF26110	2.29	(0.21)	4.32	(0.40)
ATF2620	2.61	(0.24)	4.72	(0.44)
ATF2622	2.92	(0.27)	5.13	(0.48)
ATF2624	3.23	(0.30)	5.54	(0.51)
ATF2626	3.55	(0.33)	5.94	(0.55)
ATF2628	3.86	(0.36)	6.35	(0.59)
ATF2630	4.49	(0.42)	7.16	(0.67)
ATF2634	5.12	(0.48)	7.97	(0.74)
ATF2810	0.79	(0.07)	2.44	(0.23)
ATF2814	1.47	(0.14)	3.31	(0.31)
ATF2816	1.81	(0.17)	3.74	(0.35)
ATF2818	2.15	(0.20)	4.18	(0.39)
ATF28110	2.49	(0.23)	4.61	(0.43)
ATF2820	2.84	(0.26)	5.05	(0.47)
ATF2822	3.18	(0.30)	5.48	(0.51)
ATF2824	3.52	(0.33)	5.91	(0.55)
ATF2826	3.86	(0.36)	6.35	(0.59)
ATF2828	4.20	(0.39)	6.78	(0.63)
ATF2830	4.89	(0.45)	7.65	(0.71)
ATF2834	5.57	(0.52)	8.52	(0.79)
ATF21010	0.85	(0.08)	2.60	(0.24)
ATF21014	1.59	(0.15)	3.52	(0.33)
ATF21016	1.96	(0.18)	3.98	(0.37)
ATF21018	2.33	(0.22)	4.44	(0.41)

• Dimensions in parentheses are in square meters.

continued on next page

Venting Transom Window Opening and Area Specifications *(continued)*

Window Number	Clear Opening Sq. Ft./(m²)		Clear Opening in Full Open Position: Width Inches/(mm)		Clear Opening in Full Open Position: Depth Inches/(mm)		Glass Area Sq. Ft./(m²)		Vent Sq. Ft./(m²)		Top of Subfloor to Top of Inside Sill Stop Inches/(mm)		Overall Window Area Sq. Ft./(m²)	
ATV3418	1.40	(0.13)	34 5/16"	(871)	5 7/8"	(150)	2.85	(0.27)	1.40	(0.13)	65 1/2"	(1663)	5.25	(0.49)
ATV3818	1.57	(0.15)	38 5/16"	(973)	5 7/8"	(150)	3.20	(0.30)	1.57	(0.15)	65 1/2"	(1663)	5.78	(0.54)
ATV4018	1.73	(0.16)	42 5/16"	(1075)	5 7/8"	(150)	3.55	(0.33)	1.73	(0.16)	65 1/2"	(1663)	6.32	(0.59)
ATV4418	1.90	(0.18)	46 5/16"	(1176)	5 7/8"	(150)	3.90	(0.36)	1.90	(0.18)	65 1/2"	(1663)	6.85	(0.64)
ATV4818	2.06	(0.19)	50 5/16"	(1278)	5 7/8"	(150)	4.25	(0.40)	2.06	(0.19)	65 1/2"	(1663)	7.39	(0.69)
ATV5018	2.22	(0.21)	54 5/16"	(1379)	5 7/8"	(150)	4.60	(0.43)	2.22	(0.21)	65 1/2"	(1663)	7.92	(0.74)
ATV5418	2.39	(0.22)	58 5/16"	(1481)	5 7/8"	(150)	4.95	(0.46)	2.39	(0.22)	65 1/2"	(1663)	8.46	(0.79)
ATV5818	2.55	(0.24)	62 5/16"	(1538)	5 7/8"	(150)	5.30	(0.49)	2.55	(0.24)	65 1/2"	(1663)	8.99	(0.84)
ATV6018	2.71	(0.25)	66 5/16"	(1684)	5 7/8"	(150)	5.65	(0.53)	2.71	(0.25)	65 1/2"	(1663)	9.53	(0.88)
ATV18110	0.59	(0.05)	14 5/16"	(363)	5 7/8"	(150)	1.28	(0.12)	0.59	(0.05)	63 1/2"	(1612)	2.84	(0.26)
ATV20110	0.75	(0.07)	18 5/16"	(465)	5 7/8"	(150)	1.68	(0.16)	0.75	(0.07)	63 1/2"	(1612)	3.43	(0.32)
ATV24110	0.91	(0.08)	22 5/16"	(567)	5 7/8"	(150)	2.09	(0.19)	0.91	(0.08)	63 1/2"	(1612)	4.02	(0.37)
ATV26110	0.99	(0.09)	24 5/16"	(617)	5 7/8"	(150)	2.29	(0.21)	0.99	(0.09)	63 1/2"	(1612)	4.32	(0.40)
ATV28110	1.08	(0.10)	26 5/16"	(668)	5 7/8"	(150)	2.49	(0.23)	1.08	(0.10)	63 1/2"	(1612)	4.61	(0.43)
ATV210110	1.16	(0.11)	28 5/16"	(719)	5 7/8"	(150)	2.70	(0.25)	1.16	(0.11)	63 1/2"	(1612)	4.91	(0.46)
ATV30110	1.24	(0.12)	30 5/16"	(770)	5 7/8"	(150)	2.90	(0.27)	1.24	(0.12)	63 1/2"	(1612)	5.20	(0.48)
ATV32110	1.32	(0.12)	32 5/16"	(821)	5 7/8"	(150)	3.10	(0.29)	1.32	(0.12)	63 1/2"	(1612)	5.50	(0.51)
ATV34110	1.40	(0.13)	34 5/16"	(871)	5 7/8"	(150)	3.31	(0.31)	1.40	(0.13)	63 1/2"	(1612)	5.79	(0.54)
ATV38110	1.57	(0.15)	38 5/16"	(973)	5 7/8"	(150)	3.71	(0.34)	1.57	(0.15)	63 1/2"	(1612)	6.38	(0.59)
ATV40110	1.73	(0.16)	42 5/16"	(1075)	5 7/8"	(150)	4.12	(0.38)	1.73	(0.16)	63 1/2"	(1612)	6.97	(0.65)
ATV44110	1.90	(0.18)	46 5/16"	(1176)	5 7/8"	(150)	4.55	(0.42)	1.90	(0.18)	63 1/2"	(1612)	7.56	(0.70)
ATV48110	2.06	(0.19)	50 5/16"	(1278)	5 7/8"	(150)	4.93	(0.46)	2.06	(0.19)	63 1/2"	(1612)	8.15	(0.76)
ATV50110	2.22	(0.21)	54 5/16"	(1379)	5 7/8"	(150)	5.33	(0.50)	2.22	(0.21)	63 1/2"	(1612)	8.74	(0.81)
ATV54110	2.39	(0.22)	58 5/16"	(1481)	5 7/8"	(150)	5.74	(0.53)	2.39	(0.22)	63 1/2"	(1612)	9.33	(0.87)
ATV58110	2.55	(0.24)	62 5/16"	(1538)	5 7/8"	(150)	6.14	(0.57)	2.55	(0.24)	63 1/2"	(1612)	9.92	(0.92)
ATV60110	2.71	(0.25)	66 5/16"	(1684)	5 7/8"	(150)	6.55	(0.61)	2.71	(0.25)	63 1/2"	(1612)	10.51	(0.98)
ATV1820	0.59	(0.05)	14 5/16"	(363)	5 7/8"	(150)	1.45	(0.13)	0.59	(0.05)	61 1/2"	(1561)	3.11	(0.29)
ATV2020	0.75	(0.07)	18 5/16"	(465)	5 7/8"	(150)	1.91	(0.18)	0.75	(0.07)	61 1/2"	(1561)	3.75	(0.35)
ATV2420	0.91	(0.08)	22 5/16"	(567)	5 7/8"	(150)	2.38	(0.22)	0.91	(0.08)	61 1/2"	(1561)	4.40	(0.41)
ATV2620	0.99	(0.09)	24 5/16"	(617)	5 7/8"	(150)	2.61	(0.24)	0.99	(0.09)	61 1/2"	(1561)	4.72	(0.44)
ATV2820	1.08	(0.10)	26 5/16"	(668)	5 7/8"	(150)	2.84	(0.26)	1.08	(0.10)	61 1/2"	(1561)	5.05	(0.47)
ATV21020	1.16	(0.11)	28 5/16"	(719)	5 7/8"	(150)	3.07	(0.28)	1.16	(0.11)	61 1/2"	(1561)	5.37	(0.50)
ATV3020	1.24	(0.12)	30 5/16"	(770)	5 7/8"	(150)	3.30	(0.31)	1.24	(0.12)	61 1/2"	(1561)	5.69	(0.53)
ATV3220	1.32	(0.12)	32 5/16"	(821)	5 7/8"	(150)	3.53	(0.33)	1.32	(0.12)	61 1/2"	(1561)	6.01	(0.56)
ATV3420	1.40	(0.13)	34 5/16"	(871)	5 7/8"	(150)	3.76	(0.35)	1.40	(0.13)	61 1/2"	(1561)	6.34	(0.59)
ATV3820	1.57	(0.15)	38 5/16"	(973)	5 7/8"	(150)	4.22	(0.39)	1.57	(0.15)	61 1/2"	(1561)	6.98	(0.65)
ATV4020	1.73	(0.16)	42 5/16"	(1075)	5 7/8"	(150)	4.68	(0.43)	1.73	(0.16)	61 1/2"	(1561)	7.63	(0.71)
ATV4420	1.90	(0.18)	46 5/16"	(1176)	5 7/8"	(150)	5.14	(0.48)	1.90	(0.18)	61 1/2"	(1561)	8.28	(0.77)

• "Top of Subfloor to Top of Inside Sill Stop" is calculated based upon a structural header height of 6'-10 1/2" (2096).
• Dimensions in parentheses are in millimeters or square meters.

continued on next page

Table of Transom Window Sizes *(continued)*

Scale 1/8" (3) = 1'-0" (305) — 1:96

Notes on page 55 also apply to this page.

Unit Dimension	6'-3 1/4" (1911)	6'-7 1/4" (2013)	6'-11 1/4" (2115)	7'-3 1/4" (2216)	7'-7 1/4" (2318)	7'-11 1/4" (2419)
Minimum Rough Opening	6'-4" (1930)	6'-8" (2032)	7'-0" (2133)	7'-4" (2235)	7'-8" (2336)	8'-0" (2438)
Unobstructed Glass	68 5/8" (1743)	72 5/8" (1845)	76 5/8" (1946)	80 5/8" (2048)	84 5/8" (2149)	88 5/8" (2251)

CUSTOM WIDTHS — fixed **15 1/4"** to **95 1/4"** (largest dimensions are **95 1/4" x 71 1/4"** or **71 1/4" x 95 1/4"**)

CUSTOM HEIGHTS — fixed **11 1/4"** to **95 1/4"**

11 1/4" (286) 1'-0" (305) 4 5/8" (117)	**ATF**6410	**ATF**6810	**ATF**7010	**ATF**7410	**ATF**7810	**ATF**8010
1'-3 1/4" (387) 1'-4" (406) 8 5/8" (219)	**ATF**6414	**ATF**6814	**ATF**7014	**ATF**7414	**ATF**7814	**ATF**8014
1'-5 1/4" (438) 1'-6" (457) 10 5/8" (270)	**ATF**6416	**ATF**6816	**ATF**7016	**ATF**7416	**ATF**7816	**ATF**8016
1'-7 1/4" (489) 1'-8" (508) 12 5/8" (321)	**ATF**6418	**ATF**6818	**ATF**7018	**ATF**7418	**ATF**7818	**ATF**8018
1'-9 1/4" (540) 1'-10" (559) 14 5/8" (371)	**ATF**64110	**ATF**68110	**ATF**70110	**ATF**74110	**ATF**78110	**ATF**80110
1'-11 1/4" (591) 2'-0" (610) 16 5/8" (422)	**ATF**6420	**ATF**6820	**ATF**7020	**ATF**7420	**ATF**7820	**ATF**8020
2'-1 1/4" (641) 2'-2" (660) 18 5/8" (473)	**ATF**6422	**ATF**6822	**ATF**7022	**ATF**7422	**ATF**7822	**ATF**8022
2'-3 1/4" (692) 2'-4" (711) 20 5/8" (524)	**ATF**6424	**ATF**6824	**ATF**7024	**ATF**7424	**ATF**7824	**ATF**8024
2'-5 1/4" (743) 2'-6" (762) 22 5/8" (575)	**ATF**6426	**ATF**6826	**ATF**7026	**ATF**7426	**ATF**7826	**ATF**8026
2'-7 1/4" (794) 2'-8" (813) 24 5/8" (625)	**ATF**6428	**ATF**6828	**ATF**7028	**ATF**7428	**ATF**7828	**ATF**8028
2'-11 1/4" (895) 3'-0" (914) 28 5/8" (727)	**ATF**6430	**ATF**6830	**ATF**7030	**ATF**7430	**ATF**7830	**ATF**8030
3'-3 1/4" (997) 3'-4" (1016) 32 5/8" (625)	**ATF**6434	**ATF**6834	**ATF**734	**ATF**7434	**ATF**7834	**ATF**8034

Fixed Transom Window Area Specifications *(continued)*

Window Number	Glass Area Sq. Ft./(m²)		Overall Window Area Sq. Ft./(m²)	
ATF210110	2.70	(0.25)	4.91	(0.46)
ATF21020	3.07	(0.28)	5.37	(0.50)
ATF21022	3.44	(0.32)	5.83	(0.54)
ATF21024	3.81	(0.35)	6.29	(0.58)
ATF21026	4.17	(0.39)	6.75	(0.63)
ATF21028	4.54	(0.42)	7.22	(0.67)
ATF21030	5.28	(0.49)	8.14	(0.76)
ATF21034	6.02	(0.56)	9.06	(0.84)
ATF3010	0.91	(0.08)	2.75	(0.26)
ATF3014	1.71	(0.16)	3.73	(0.35)
ATF3016	2.11	(0.20)	4.22	(0.39)

• Dimensions in parentheses are in square meters.

continued on next page

Venting Transom Window Opening and Area Specifications *(continued)*

Window Number	Clear Opening Sq. Ft./(m²)		Clear Opening in Full Open Position: Width Inches/(mm)		Clear Opening in Full Open Position: Depth Inches/(mm)		Glass Area Sq. Ft./(m²)		Vent Sq. Ft./(m²)		Top of Subfloor to Top of Inside Sill Stop Inches/(mm)		Overall Window Area Sq. Ft./(m²)	
ATV4820	2.06	(0.19)	50 5/16"	(1278)	5 7/8"	(150)	5.60	(0.52)	2.06	(0.19)	61 1/2"	(1561)	8.92	(0.83)
ATV5020	2.22	(0.21)	54 5/16"	(1379)	5 7/8"	(150)	6.06	(0.56)	2.22	(0.21)	61 1/2"	(1561)	9.57	(0.89)
ATV5420	2.39	(0.22)	58 5/16"	(1481)	5 7/8"	(150)	6.53	(0.61)	2.39	(0.22)	61 1/2"	(1561)	10.21	(0.62)
ATV5820	2.55	(0.24)	62 5/16"	(1538)	5 7/8"	(150)	6.99	(0.65)	2.55	(0.24)	61 1/2"	(1561)	10.86	(0.66)
ATV6020	2.71	(0.25)	66 5/16"	(1684)	5 7/8"	(150)	7.45	(0.69)	2.71	(0.25)	61 1/2"	(1561)	11.50	(0.70)
ATV1822	0.59	(0.05)	14 5/16"	(363)	5 7/8"	(150)	1.63	(0.15)	0.59	(0.05)	59 1/2"	(1510)	3.38	(0.31)
ATV2022	0.75	(0.07)	18 5/16"	(465)	5 7/8"	(150)	2.14	(0.20)	0.75	(0.07)	59 1/2"	(1510)	4.08	(0.38)
ATV2422	0.91	(0.08)	22 5/16"	(567)	5 7/8"	(150)	2.66	(0.25)	0.91	(0.08)	59 1/2"	(1510)	4.78	(0.44)
ATV2622	0.99	(0.09)	24 5/16"	(617)	5 7/8"	(150)	2.92	(0.27)	0.99	(0.09)	59 1/2"	(1510)	5.13	(0.48)
ATV2822	1.08	(0.10)	26 5/16"	(668)	5 7/8"	(150)	3.18	(0.30)	1.08	(0.10)	59 1/2"	(1510)	5.48	(0.51)
ATV21022	1.16	(0.11)	28 5/16"	(719)	5 7/8"	(150)	3.44	(0.32)	1.16	(0.11)	59 1/2"	(1510)	5.83	(0.54)
ATV3022	1.24	(0.12)	30 5/16"	(770)	5 7/8"	(150)	3.69	(0.34)	1.24	(0.12)	59 1/2"	(1510)	6.18	(0.57)
ATV3222	1.32	(0.12)	32 5/16"	(821)	5 7/8"	(150)	3.95	(0.37)	1.32	(0.12)	59 1/2"	(1510)	6.53	(0.61)

• "Top of Subfloor to Top of Inside Sill Stop" is calculated based upon a structural header height of 6'-10 1/2" (2096).
• Dimensions in parentheses are in millimeters or square meters.

continued on next page

Fixed Transom Window Area Specifications *(continued)*

Window Number	Glass Area Sq. Ft./(m²)		Overall Window Area Sq. Ft./(m²)	
ATF3018	2.50	(0.23)	4.71	(0.44)
ATF30110	2.90	(0.27)	5.20	(0.48)
ATF3020	3.30	(0.31)	5.69	(0.53)
ATF3022	3.69	(0.34)	6.18	(0.57)
ATF3024	4.09	(0.38)	6.67	(0.62)
ATF3026	4.49	(0.42)	7.16	(0.67)
ATF3028	4.89	(0.45)	7.65	(0.71)
ATF3030	5.68	(0.53)	8.63	(0.80)
ATF3034	6.47	(0.60)	9.61	(0.89)
ATF3210	0.98	(0.09)	2.91	(0.27)
ATF3214	1.83	(0.17)	3.94	(0.37)
ATF3216	2.25	(0.21)	4.46	(0.41)
ATF3218	2.68	(0.25)	4.98	(0.46)
ATF32110	3.10	(0.29)	5.50	(0.51)
ATF3220	3.53	(0.33)	6.01	(0.56)
ATF3222	3.95	(0.37)	6.53	(0.61)
ATF3224	4.38	(0.41)	7.05	(0.65)
ATF3226	4.80	(0.45)	7.57	(0.70)
ATF3228	5.23	(0.49)	8.08	(0.75)
ATF3230	6.08	(0.56)	9.12	(0.85)
ATF3234	6.93	(0.64)	10.15	(0.94)
ATF3410	1.04	(0.10)	3.07	(0.28)
ATF3414	1.95	(0.18)	4.16	(0.39)
ATF3416	2.40	(0.22)	4.70	(0.44)
ATF3418	2.85	(0.26)	5.25	(0.49)
ATF34110	3.31	(0.31)	5.79	(0.54)
ATF3420	3.76	(0.35)	6.34	(0.59)
ATF3422	4.21	(0.39)	6.88	(0.64)
ATF3424	4.66	(0.43)	7.43	(0.69)
ATF3426	5.12	(0.48)	7.97	(0.74)
ATF3428	5.57	(0.52)	8.52	(0.79)
ATF3430	6.47	(0.60)	9.61	(0.89)
ATF3434	7.38	(0.69)	10.70	(0.99)
ATF3810	1.17	(0.11)	3.38	(0.31)
ATF3814	2.19	(0.20)	4.58	(0.43)
ATF3816	2.69	(0.25)	5.18	(0.48)
ATF3818	3.20	(0.30)	5.78	(0.54)
ATF38110	3.71	(0.34)	6.38	(0.59)
ATF3820	4.22	(0.39)	6.98	(0.65)
ATF3822	4.73	(0.44)	7.58	(0.70)
ATF3824	5.24	(0.49)	8.18	(0.76)
ATF3826	5.74	(0.53)	8.79	(0.82)
ATF3828	6.25	(0.58)	9.39	(0.87)
ATF3830	7.27	(0.68)	10.59	(0.98)
ATF3834	8.29	(0.77)	11.79	(1.10)
ATF4010	1.30	(0.12)	3.69	(0.34)
ATF4014	2.42	(0.23)	5.00	(0.46)
ATF4016	2.99	(0.28)	5.66	(0.53)
ATF4018	3.55	(0.33)	6.32	(0.59)
ATF40110	4.12	(0.38)	6.97	(0.65)
ATF4020	4.68	(0.43)	7.63	(0.71)
ATF4022	5.24	(0.49)	8.29	(0.77)
ATF4024	5.81	(0.54)	8.94	(0.83)
ATF4026	6.37	(0.59)	9.60	(0.89)
ATF4028	6.94	(0.64)	10.25	(0.95)
ATF4030	8.06	(0.75)	11.57	(1.07)
ATF4034	9.19	(0.85)	12.88	(1.20)
ATF4410	1.42	(0.13)	4.00	(0.37)

• Dimensions in parentheses are in square meters.

continued on next page

Venting Transom Window Opening and Area Specifications *(continued)*

Window Number	Clear Opening Sq. Ft./(m²)		Clear Opening in Full Open Position: Width Inches/(mm)		Clear Opening in Full Open Position: Depth Inches/(mm)		Glass Area Sq. Ft./(m²)		Vent Sq. Ft./(m²)		Top of Subfloor to Top of Inside Sill Stop Inches/(mm)		Overall Window Area Sq. Ft./(m²)	
ATV3422	1.40	(0.13)	34 5/16"	(871)	5 7/8"	(150)	4.21	(0.39)	1.40	(0.13)	59 1/2"	(1510)	6.88	(0.64)
ATV3822	1.57	(0.15)	38 5/16"	(973)	5 7/8"	(150)	4.73	(0.44)	1.57	(0.15)	59 1/2"	(1510)	7.58	(0.70)
ATV4022	1.73	(0.16)	42 5/16"	(1075)	5 7/8"	(150)	5.24	(0.49)	1.73	(0.16)	59 1/2"	(1510)	8.29	(0.77)
ATV4422	1.90	(0.18)	46 5/16"	(1176)	5 7/8"	(150)	5.76	(0.54)	1.90	(0.18)	59 1/2"	(1510)	8.99	(0.83)
ATV4822	2.06	(0.19)	50 5/16"	(1278)	5 7/8"	(150)	6.28	(0.58)	2.06	(0.19)	59 1/2"	(1510)	9.69	(0.90)
ATV5022	2.22	(0.21)	54 5/16"	(1379)	5 7/8"	(150)	6.79	(0.63)	2.22	(0.21)	59 1/2"	(1510)	10.39	(0.97)
ATV5422	2.39	(0.22)	58 5/16"	(1481)	5 7/8"	(150)	7.31	(0.68)	2.39	(0.22)	59 1/2"	(1510)	11.09	(1.03)
ATV5822	2.55	(0.24)	62 5/16"	(1538)	5 7/8"	(150)	7.83	(0.73)	2.55	(0.24)	59 1/2"	(1510)	11.79	(1.10)
ATV6022	2.71	(0.25)	66 5/16"	(1684)	5 7/8"	(150)	8.34	(0.78)	2.71	(0.25)	59 1/2"	(1510)	12.49	(1.16)
ATV1824	0.59	(0.05)	14 5/16"	(363)	5 7/8"	(150)	1.80	(0.17)	0.59	(0.05)	57 1/2"	(1460)	3.64	(0.34)
ATV2024	0.75	(0.07)	18 5/16"	(465)	5 7/8"	(150)	2.38	(0.22)	0.75	(0.07)	57 1/2"	(1460)	4.40	(0.41)
ATV2424	0.91	(0.08)	22 5/16"	(567)	5 7/8"	(150)	2.95	(0.27)	0.91	(0.08)	57 1/2"	(1460)	5.16	(0.48)
ATV2624	0.99	(0.09)	24 5/16"	(617)	5 7/8"	(150)	3.23	(0.30)	0.99	(0.09)	57 1/2"	(1460)	5.54	(0.51)
ATV2824	1.08	(0.10)	26 5/16"	(668)	5 7/8"	(150)	3.52	(0.33)	1.08	(0.10)	57 1/2"	(1460)	5.91	(0.55)
ATV21024	1.16	(0.11)	28 5/16"	(719)	5 7/8"	(150)	3.81	(0.35)	1.16	(0.11)	57 1/2"	(1460)	6.29	(0.58)
ATV3024	1.24	(0.12)	30 5/16"	(770)	5 7/8"	(150)	4.09	(0.38)	1.24	(0.12)	57 1/2"	(1460)	6.67	(0.62)
ATV3224	1.32	(0.12)	32 5/16"	(821)	5 7/8"	(150)	4.38	(0.41)	1.32	(0.12)	57 1/2"	(1460)	7.05	(0.65)
ATV3424	1.40	(0.13)	34 5/16"	(871)	5 7/8"	(150)	4.66	(0.43)	1.40	(0.13)	57 1/2"	(1460)	7.43	(0.69)
ATV3824	1.57	(0.15)	38 5/16"	(973)	5 7/8"	(150)	5.24	(0.49)	1.57	(0.15)	57 1/2"	(1460)	8.18	(0.76)
ATV4034	1.73	(0.16)	42 5/16"	(1075)	5 7/8"	(150)	5.81	(0.54)	1.73	(0.16)	57 1/2"	(1460)	8.94	(0.83)
ATV4424	1.90	(0.18)	46 5/16"	(1176)	5 7/8"	(150)	6.38	(0.59)	1.90	(0.18)	57 1/2"	(1460)	9.70	(0.90)
ATV4824	2.06	(0.19)	50 5/16"	(1278)	5 7/8"	(150)	6.95	(0.65)	2.06	(0.19)	57 1/2"	(1460)	10.46	(0.97)
ATV5024	2.22	(0.21)	54 5/16"	(1379)	5 7/8"	(150)	7.53	(0.70)	2.22	(0.21)	57 1/2"	(1460)	11.21	(1.04)
ATV5424	2.39	(0.22)	58 5/16"	(1481)	5 7/8"	(150)	8.10	(0.75)	2.39	(0.22)	57 1/2"	(1460)	11.97	(1.11)
ATV5824	2.55	(0.24)	62 5/16"	(1538)	5 7/8"	(150)	8.67	(0.81)	2.55	(0.24)	57 1/2"	(1460)	12.73	(1.18)
ATV6024	2.71	(0.25)	66 5/16"	(1684)	5 7/8"	(150)	9.24	(0.86)	2.71	(0.25)	57 1/2"	(1460)	13.48	(1.25)
ATV1826	0.59	(0.05)	14 5/16"	(363)	5 7/8"	(150)	1.98	(0.18)	0.59	(0.05)	55 1/2"	(1409)	3.91	(0.36)
ATV2026	0.75	(0.07)	18 5/16"	(465)	5 7/8"	(150)	2.61	(0.24)	0.75	(0.07)	55 1/2"	(1409)	4.72	(0.44)
ATV2226	0.91	(0.08)	22 5/16"	(567)	5 7/8"	(150)	3.23	(0.30)	0.91	(0.08)	55 1/2"	(1409)	5.54	(0.51)
ATV2426	0.99	(0.09)	24 5/16"	(617)	5 7/8"	(150)	3.55	(0.33)	0.99	(0.09)	55 1/2"	(1409)	5.94	(0.55)
ATV2626	1.08	(0.10)	26 5/16"	(668)	5 7/8"	(150)	3.86	(0.36)	1.08	(0.10)	55 1/2"	(1409)	6.35	(0.59)
ATV2826	1.16	(0.11)	28 5/16"	(719)	5 7/8"	(150)	4.18	(0.39)	1.16	(0.11)	55 1/2"	(1409)	6.75	(0.63)
ATV3026	1.24	(0.12)	30 5/16"	(770)	5 7/8"	(150)	4.49	(0.42)	1.24	(0.12)	55 1/2"	(1409)	7.16	(0.67)
ATV3226	1.32	(0.12)	32 5/16"	(821)	5 7/8"	(150)	4.80	(0.45)	1.32	(0.12)	55 1/2"	(1409)	7.57	(0.70)
ATV3426	1.40	(0.13)	34 5/16"	(871)	5 7/8"	(150)	5.12	(0.48)	1.40	(0.13)	55 1/2"	(1409)	7.97	(0.74)
ATV3826	1.57	(0.15)	38 5/16"	(973)	5 7/8"	(150)	5.74	(0.53)	1.57	(0.15)	55 1/2"	(1409)	8.79	(0.82)
ATV4026	1.73	(0.16)	42 5/16"	(1075)	5 7/8"	(150)	6.37	(0.59)	1.73	(0.16)	55 1/2"	(1409)	9.60	(0.89)
ATV4426	1.90	(0.18)	46 5/16"	(1176)	5 7/8"	(150)	7.00	(0.65)	1.90	(0.18)	55 1/2"	(1409)	10.41	(0.97)
ATV4826	2.06	(0.19)	50 5/16"	(1278)	5 7/8"	(150)	7.63	(0.71)	2.06	(0.19)	55 1/2"	(1409)	11.22	(1.04)
ATV5026	2.22	(0.21)	54 5/16"	(1379)	5 7/8"	(150)	8.26	(0.77)	2.22	(0.21)	55 1/2"	(1409)	12.04	(1.12)
ATV5426	2.39	(0.22)	58 5/16"	(1481)	5 7/8"	(150)	8.88	(0.83)	2.39	(0.22)	55 1/2"	(1409)	12.85	(1.19)
ATV5826	2.55	(0.24)	62 5/16"	(1538)	5 7/8"	(150)	9.55	(0.89)	2.55	(0.24)	55 1/2"	(1409)	13.66	(1.27)
ATV6026	2.71	(0.25)	66 5/16"	(1684)	5 7/8"	(150)	10.14	(0.94)	2.71	(0.25)	55 1/2"	(1409)	14.47	(1.34)
ATV1828	0.59	(0.05)	14 5/16"	(363)	5 7/8"	(150)	2.15	(0.20)	0.59	(0.05)	53 1/2"	(1358)	4.18	(0.39)
ATV2028	0.75	(0.07)	18 5/16"	(465)	5 7/8"	(150)	2.84	(0.26)	0.75	(0.07)	53 1/2"	(1358)	5.05	(0.47)
ATV2428	0.91	(0.08)	22 5/16"	(567)	5 7/8"	(150)	3.52	(0.33)	0.91	(0.08)	53 1/2"	(1358)	5.91	(0.55)
ATV2628	0.99	(0.09)	24 5/16"	(617)	5 7/8"	(150)	3.86	(0.36)	0.99	(0.09)	53 1/2"	(1358)	6.35	(0.59)
ATV2828	1.08	(0.10)	26 5/16"	(668)	5 7/8"	(150)	4.20	(0.39)	1.08	(0.10)	53 1/2"	(1358)	6.78	(0.63)
ATV21028	1.16	(0.11)	28 5/16"	(719)	5 7/8"	(150)	4.54	(0.42)	1.16	(0.11)	53 1/2"	(1358)	7.22	(0.67)
ATV3028	1.24	(0.12)	30 5/16"	(770)	5 7/8"	(150)	4.89	(0.45)	1.24	(0.12)	53 1/2"	(1358)	7.56	(0.70)
ATV3228	1.32	(0.12)	32 5/16"	(821)	5 7/8"	(150)	5.23	(0.49)	1.32	(0.12)	53 1/2"	(1358)	8.08	(0.75)
ATV3428	1.40	(0.13)	34 5/16"	(871)	5 7/8"	(150)	5.57	(0.52)	1.40	(0.13)	53 1/2"	(1358)	8.52	(0.79)
ATV3828	1.57	(0.15)	38 5/16"	(973)	5 7/8"	(150)	6.25	(0.58)	1.57	(0.15)	53 1/2"	(1358)	9.39	(0.87)
ATV4028	1.73	(0.16)	42 5/16"	(1075)	5 7/8"	(150)	6.94	(0.64)	1.73	(0.16)	53 1/2"	(1358)	10.25	(0.95)
ATV4428	1.90	(0.18)	46 5/16"	(1176)	5 7/8"	(150)	7.62	(0.71)	1.90	(0.18)	53 1/2"	(1358)	11.12	(1.03)
ATV4828	2.06	(0.19)	50 5/16"	(1278)	5 7/8"	(150)	8.30	(0.77)	2.06	(0.19)	53 1/2"	(1358)	11.99	(1.11)
ATV5028	2.22	(0.21)	54 5/16"	(1379)	5 7/8"	(150)	8.99	(0.83)	2.22	(0.21)	53 1/2"	(1358)	12.86	(1.19)
ATV5428	2.39	(0.22)	58 5/16"	(1481)	5 7/8"	(150)	9.67	(0.90)	2.39	(0.22)	53 1/2"	(1358)	13.73	(1.28)
ATV5828	2.55	(0.24)	62 5/16"	(1538)	5 7/8"	(150)	10.35	(0.96)	2.55	(0.24)	53 1/2"	(1358)	14.59	(1.36)
ATV6028	2.71	(0.25)	66 5/16"	(1684)	5 7/8"	(150)	11.04	(1.03)	2.71	(0.25)	53 1/2"	(1358)	15.46	(1.44)

• "Top of Subfloor to Top of Inside Sill Stop" is calculated based upon a structural header height of 6'-10 1/2" (2096).
• Dimensions in parentheses are in millimeters or square meters.

Fixed Transom Window Area Specifications *(continued)*

Window Number	Glass Area Sq. Ft./(m²)		Overall Window Area Sq. Ft./(m²)	
ATF4414	2.66	(0.25)	5.43	(0.50)
ATF4416	3.28	(0.30)	6.14	(0.57)
ATF4418	3.90	(0.36)	6.85	(0.64)
ATF44110	4.52	(0.42)	7.56	(0.70)
ATF4420	5.14	(0.48)	8.27	(0.77)
ATF4422	5.76	(0.54)	8.99	(0.83)
ATF4424	6.38	(0.59)	9.70	(0.90)
ATF4426	7.00	(0.65)	10.41	(0.97)
ATF4428	7.62	(0.71)	11.12	(1.03)
ATF4430	8.86	(0.82)	12.55	(1.17)
ATF4434	10.10	(0.94)	13.97	(1.30)
ATF4810	1.55	(0.14)	4.32	(0.40)
ATF4814	2.90	(0.27)	5.85	(0.54)
ATF4816	3.58	(0.33)	6.62	(0.61)
ATF4818	4.25	(0.40)	7.39	(0.69)
ATF48110	4.93	(0.46)	8.15	(0.76)
ATF4820	5.60	(0.52)	8.92	(0.83)
ATF4822	6.28	(0.58)	9.69	(0.90)
ATF4824	6.95	(0.65)	10.46	(0.97)
ATF4826	7.63	(0.71)	11.22	(1.04)
ATF4828	8.30	(0.77)	11.99	(1.11)
ATF4830	9.65	(0.90)	13.52	(1.26)
ATF4834	11.00	(1.02)	15.06	(1.40)
ATF5010	1.68	(0.16)	4.63	(0.43)
ATF5014	3.14	(0.29)	6.27	(0.58)
ATF5016	3.87	(0.36)	7.10	(0.66)
ATF5018	4.60	(0.43)	7.92	(0.74)
ATF50110	5.33	(0.50)	8.74	(0.81)
ATF5020	6.06	(0.56)	9.57	(0.89)
ATF5022	6.79	(0.63)	10.39	(0.97)
ATF5024	7.52	(0.70)	11.21	(1.04)
ATF5026	8.26	(0.77)	12.04	(1.12)
ATF5028	8.99	(0.83)	12.86	(1.19)
ATF5030	10.45	(0.97)	14.50	(1.35)
ATF5034	11.91	(1.11)	16.15	(1.50)
ATF5410	1.81	(0.17)	4.94	(0.46)
ATF5414	3.38	(0.31)	6.70	(0.62)
ATF5416	4.17	(0.39)	7.58	(0.70)
ATF5418	4.95	(0.46)	8.46	(0.79)
ATF54110	5.74	(0.53)	9.33	(0.87)
ATF5420	6.52	(0.61)	10.21	(0.95)
ATF5422	7.31	(0.68)	11.09	(1.03)
ATF5424	8.10	(0.75)	11.97	(1.11)
ATF5426	8.88	(0.83)	12.85	(1.19)
ATF5428	9.67	(0.90)	13.73	(1.28)
ATF5430	11.24	(1.04)	15.48	(1.44)
ATF5434	12.81	(1.19)	17.24	(1.60)
ATF5810	1.94	(0.18)	5.25	(0.49)

Window Number	Glass Area Sq. Ft./(m²)		Overall Window Area Sq. Ft./(m²)	
ATF5814	3.62	(0.34)	7.12	(0.66)
ATF5816	4.46	(0.41)	8.06	(0.75)
ATF5818	5.30	(0.49)	8.99	(0.84)
ATF58110	6.14	(0.57)	9.92	(0.92)
ATF5820	6.99	(0.65)	10.86	(1.01)
ATF5822	7.83	(0.73)	11.79	(1.10)
ATF5824	8.67	(0.81)	12.73	(1.18)
ATF5826	9.51	(0.88)	13.66	(1.27)
ATF5828	10.35	(0.96)	14.59	(1.36)
ATF5830	12.04	(1.12)	16.46	(1.53)
ATF5834	13.72	(1.27)	18.33	(1.70)
ATF6010	2.06	(0.19)	5.57	(0.52)
ATF6014	3.86	(0.36)	7.55	(0.70)
ATF6016	4.76	(0.44)	8.54	(0.79)
ATF6018	5.65	(0.53)	9.52	(0.88)
ATF60110	6.55	(0.61)	10.51	(0.98)
ATF6020	7.45	(0.69)	11.50	(1.07)
ATF6022	8.34	(0.78)	12.49	(1.16)
ATF6024	9.24	(0.86)	13.48	(1.25)
ATF6026	10.14	(0.94)	14.47	(1.34)
ATF6028	11.04	(1.03)	15.46	(1.44)
ATF6030	12.83	(1.19)	17.44	(1.62)
ATF6034	14.62	(1.36)	19.42	(1.80)
ATF6410	2.19	(0.20)	5.88	(0.55)
ATF6414	4.10	(0.38)	7.97	(0.74)
ATF6416	5.05	(0.47)	9.01	(0.84)
ATF6418	6.00	(0.56)	10.06	(0.93)
ATF64110	6.96	(0.65)	11.10	(1.03)
ATF6420	7.91	(0.73)	12.15	(1.13)
ATF6422	8.86	(0.82)	13.19	(1.23)
ATF6424	9.81	(0.91)	14.24	(1.32)
ATF6426	10.77	(1.00)	15.29	(1.42)
ATF6428	11.72	(1.09)	16.33	(1.52)
ATF6430	13.62	(1.27)	18.42	(1.71)
ATF6434	15.53	(1.44)	20.51	(1.91)
ATF6810	2.32	(0.22)	6.19	(0.58)
ATF6814	4.34	(0.40)	8.39	(0.78)
ATF6816	5.34	(0.50)	9.49	(0.88)
ATF6818	6.35	(0.59)	10.59	(0.98)
ATF68110	7.36	(0.68)	11.69	(1.09)
ATF6820	8.37	(0.78)	12.80	(1.19)
ATF6822	9.38	(0.87)	13.90	(1.29)
ATF6824	10.39	(0.97)	15.00	(1.39)
ATF6826	11.39	(1.06)	16.10	(1.50)
ATF6828	12.40	(1.15)	17.20	(1.60)
ATF6830	14.42	(1.34)	19.40	(1.80)
ATF6834	16.44	(1.53)	21.60	(2.01)
ATF7010	2.45	(0.23)	6.50	(0.60)

Window Number	Glass Area Sq. Ft./(m²)		Overall Window Area Sq. Ft./(m²)	
ATF7014	4.57	(0.42)	8.82	(0.82)
ATF7016	5.64	(0.52)	9.97	(0.93)
ATF7018	6.70	(0.62)	11.13	(1.03)
ATF70110	7.77	(0.72)	12.29	(1.14)
ATF7020	8.83	(0.82)	13.44	(1.25)
ATF7022	9.89	(0.92)	14.60	(1.36)
ATF7024	10.96	(1.02)	15.75	(1.46)
ATF7026	12.02	(1.12)	16.91	(1.57)
ATF7028	13.09	(1.22)	18.07	(1.68)
ATF7030	15.21	(1.41)	20.38	(1.89)
ATF7034	17.34	(1.61)	22.69	(2.11)
ATF7410	2.57	(0.24)	6.82	(0.63)
ATF7414	4.81	(0.45)	9.24	(0.86)
ATF7416	5.93	(0.55)	10.45	(0.97)
ATF7418	7.05	(0.65)	11.66	(1.08)
ATF74110	8.17	(0.76)	12.88	(1.20)
ATF7420	9.29	(0.86)	14.09	(1.31)
ATF7422	10.41	(0.97)	15.03	(1.40)
ATF7424	11.53	(1.07)	16.51	(1.53)
ATF7426	12.65	(1.18)	17.72	(1.65)
ATF7428	13.77	(1.28)	18.93	(1.76)
ATF7430	16.01	(1.49)	21.36	(1.98)
ATF7434	18.25	(1.70)	23.78	(2.21)
ATF7810	2.70	(0.25)	7.13	(0.66)
ATF7814	5.05	(0.47)	9.66	(0.90)
ATF7816	6.23	(0.58)	10.93	(1.02)
ATF7818	7.40	(0.69)	12.20	(1.13)
ATF78110	8.58	(0.80)	13.47	(1.25)
ATF7820	9.75	(0.91)	14.73	(1.37)
ATF7822	10.93	(1.02)	16.00	(1.49)
ATF7824	12.10	(1.12)	17.27	(1.60)
ATF7826	13.28	(1.23)	18.54	(1.72)
ATF7828	14.45	(1.34)	19.80	(1.84)
ATF7830	16.80	(1.56)	22.34	(2.08)
ATF7834	19.15	(1.78)	24.87	(2.31)
ATF8010	2.83	(0.26)	7.44	(0.69)
ATF8014	5.29	(0.49)	10.09	(0.94)
ATF8016	6.52	(0.61)	11.41	(1.06)
ATF8018	7.75	(0.72)	12.73	(1.18)
ATF80110	8.98	(0.83)	14.06	(1.31)
ATF8020	10.21	(0.95)	15.38	(1.43)
ATF8022	11.44	(1.06)	16.70	(1.55)
ATF8024	12.67	(1.18)	18.02	(1.67)
ATF8026	13.91	(1.29)	19.35	(1.80)
ATF8028	15.41	(1.43)	20.67	(1.92)
ATF8030	17.60	(1.64)	23.32	(2.17)
ATF8034	20.06	(1.86)	26.96	(2.50)

• Dimensions in parentheses are in square meters.

Grille Patterns

	Diamond	Prairie A	Colonial
Transom			

Number of lights and overall pattern varies with window size. Patterns may not be available in all configurations or sizes. Specified equal light and custom patterns are also available.

For more grille options, see page 19 or visit **andersenwindows.com/grilles**.

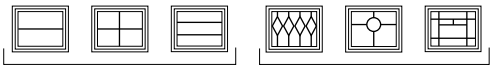

Specified Equal Light Examples Custom Examples

Fixed Transom Window Details

Scale 1 1/2" (38) = 1'-0" (305) – 1:8

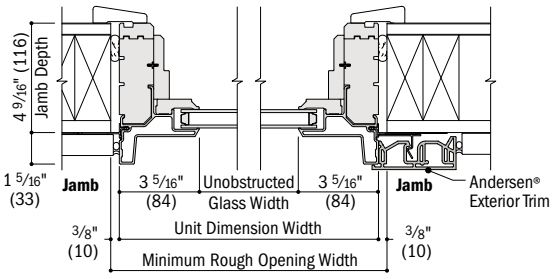

Horizontal Section

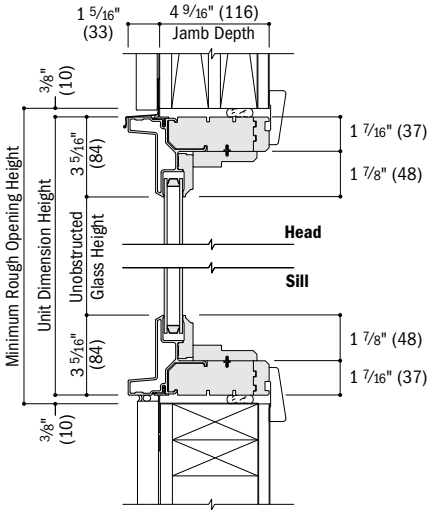

Vertical Section

Venting Transom Window Details

Scale 1 1/2" (38) = 1'-0" (305) – 1:8

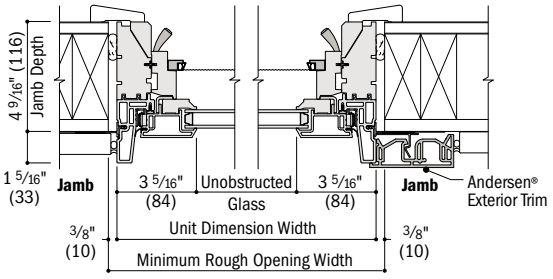

Horizontal Section

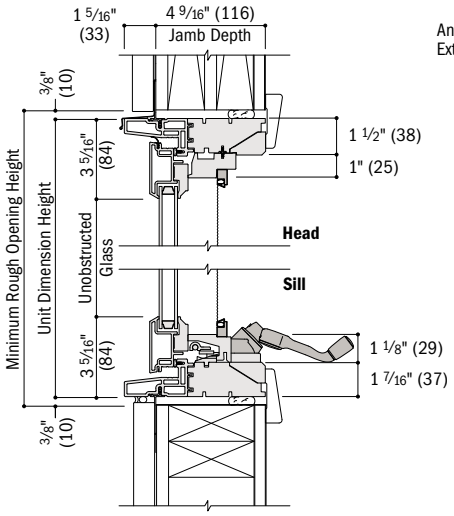

Vertical Section

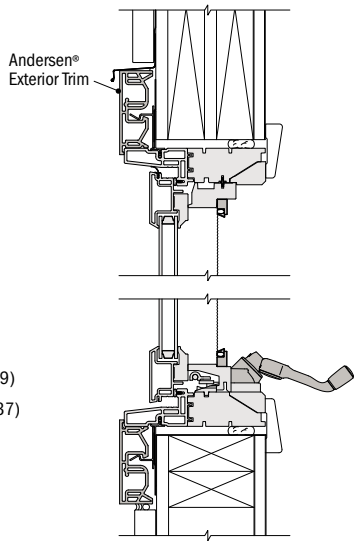

Vertical Section

See pages 60-62 for joining details.

- 4 9/16" (116) base jamb depth measurement is from back side of installation flange.
- Light-colored areas are parts included with window. Dark-colored areas are additional Andersen® parts required to complete window assembly as shown.
- Dimensions in parentheses are in millimeters.
- **Minimum rough openings may need to be increased to allow for use of building wraps, flashing, sill panning, brackets, fasteners or other items. See installation information on pages 226-227.**
- Details are for illustration only and are not intended to represent product installation methods or materials. Refer to product installation instruction at andersenwindows.com.

Minimum Rough Opening Calculation Examples

Single Window

2'-11 1/4"	(895)	Width dimension, window 1
+ 3/8"	(10)	Rough opening clearance, side 1
+ 3/8"	(10)	Rough opening clearance, side 2
3'-0"	**(914)**	**Total**

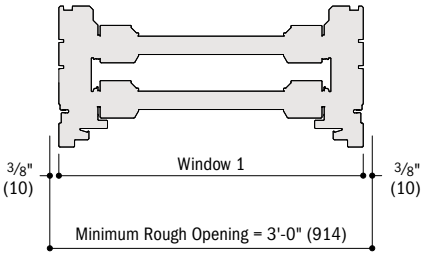

Two Vertical (ribbon) Joined Windows

2'-11 1/4"	(895)	Width dimension, window 1
2'-11 1/4"	(895)	Width dimension, window 2
+ 3/8"	(10)	Rough opening clearance, side 1
+ 3/8"	(10)	Rough opening clearance, side 2
+ 3/4"	(19)	Fiberglass joining material, join 1
6'-0"	**(1829)**	**Total**

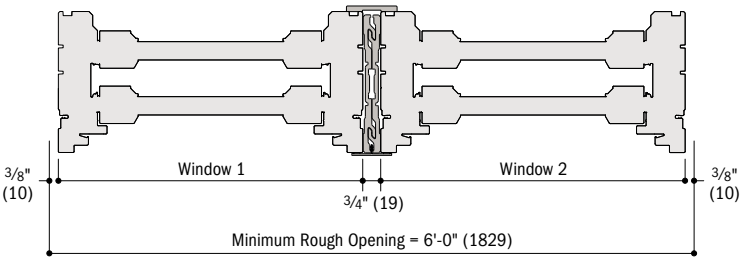

For factory-joined windows, modular sizing allows for easy calculation of minimum rough opening sizes.

Three Vertical (ribbon) Joined Windows

2'-11 1/4"	(895)	Width dimension, window 1
2'-11 1/4"	(895)	Width dimension, window 2
2'-11 1/4"	(895)	Width dimension, window 3
+ 3/8"	(10)	Rough opening clearance, side 1
+ 3/8"	(10)	Rough opening clearance, side 2
+ 3/4"	(19)	Fiberglass joining material, join 1
+ 3/4"	(19)	Fiberglass joining material, join 2
9'-0"	**(2743)**	**Total**

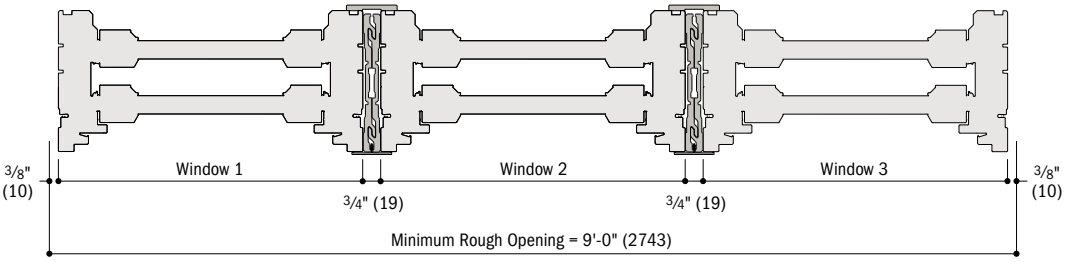

- Dimensions in parentheses are in millimeters.
- **Minimum rough openings may need to be increased to allow for use of building wraps, flashing, sill panning, brackets, fasteners or other items. See installation information on pages 226-227.**
- Details are for illustration only and are not intended to represent product installation methods or materials. Refer to product installation instructions at andersenwindows.com.
- Structural performance of any combination is only as high as the lowest structural performance of any individual product or join in the combination.

Vertical (ribbon) Joining Details

Scale 3" (76) = 1'-0" (305) – 1:4

Windows can be joined to other windows using clips or 4 9/16" (116) fiberglass joining material. See page 112 for specialty window joining details.

Overall Window Dimension Width – Sum of individual window widths plus 3/4" (19) per join.

Overall Minimum Rough Opening Width – Overall window dimension width plus 3/4" (19).

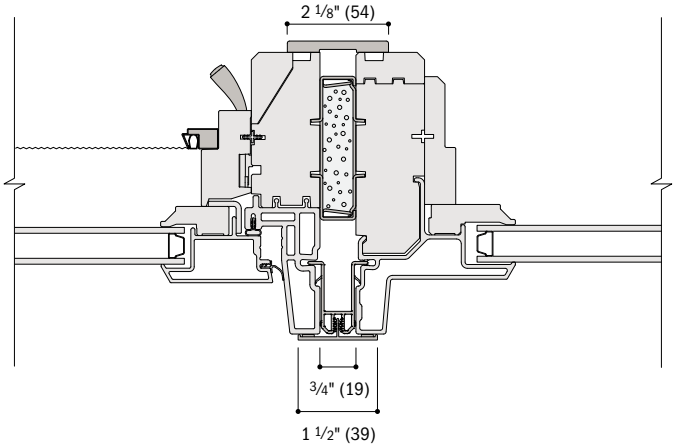

Casement to Picture
Clip

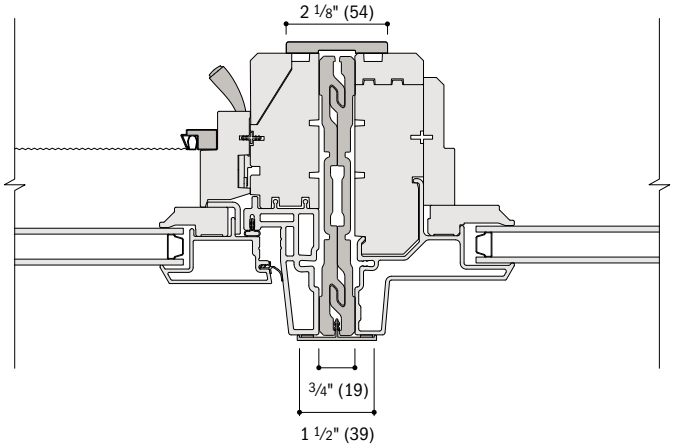

Casement to Picture
Fiberglass

Vertical (ribbon) Easy Connect Fiberglass Joining Details

Scale 1 1/2" (38) = 1'-0" (305) – 1:8

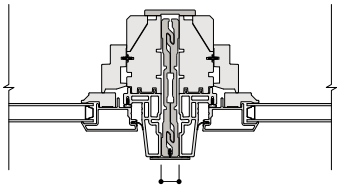

3/4" (19)

Casement to Casement
Stationary Jamb to Stationary Jamb

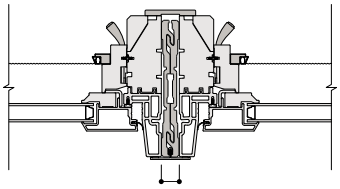

3/4" (19)

Casement to Casement
Lock Jamb to Lock Jamb

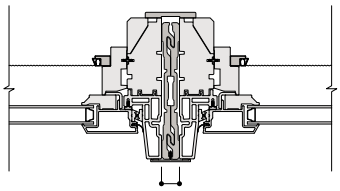

3/4" (19)

Casement to Casement
Hinge Jamb to Hinge Jamb

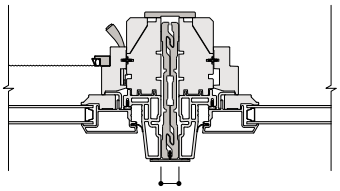

3/4" (19)

Casement to Casement
Lock Jamb to Stationary Jamb

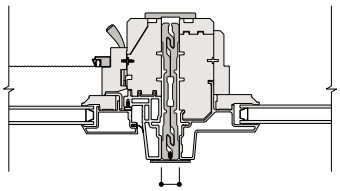

3/4" (19)

Casement to Picture
Casement Lock Jamb

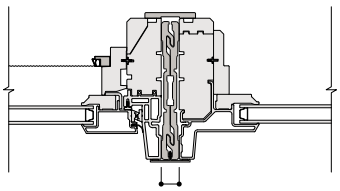

3/4" (19)

Casement to Picture
Casement Hinge Jamb

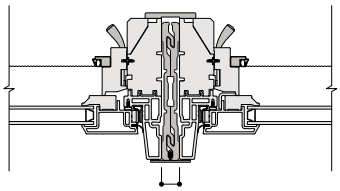

3/4" (19)

Awning to Awning

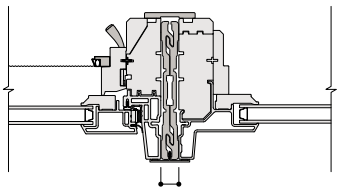

3/4" (19)

Awning to Picture

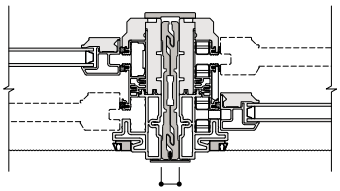

3/4" (19)

Double-Hung to Double-Hung

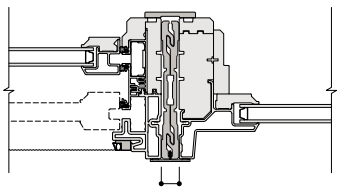

3/4" (19)

Double-Hung to Picture

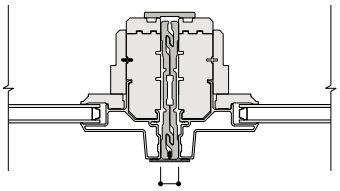

3/4" (19)

Picture to Picture

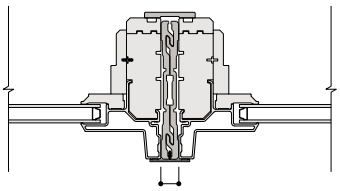

3/4" (19)

Fixed Transom to Fixed Transom

- Light-colored areas are parts included with window. Dark-colored areas are additional Andersen® parts required to complete window assembly as shown.
- Dimensions in parentheses are in millimeters.
- **Minimum rough openings may need to be increased to allow for use of building wraps, flashing, sill panning, brackets, fasteners or other items. See installation information on pages 226-227.**
- Details are for illustration only and are not intended to represent product installation methods or materials. Refer to product installation instructions at andersenwindows.com.
- Structural performance of any combination is only as high as the lowest structural performance of any individual product or join in the combination.
- Not all combinations are shown above; visit andersenwindows.com or contact your Andersen supplier for additional joining details.

Horizontal (stack) Joining Details

Scale 3" (76) = 1'-0" (305) — 1:4

Windows can be joined to other windows using clips or 4 9/16" (116) fiberglass joining material. See page 112 for specialty window joining details.

Overall Window Dimension Height –

Sum of individual window heights plus 3/4" (19) per join.

Overall Minimum Rough Opening Height –

Overall window dimension height plus 3/4" (19).

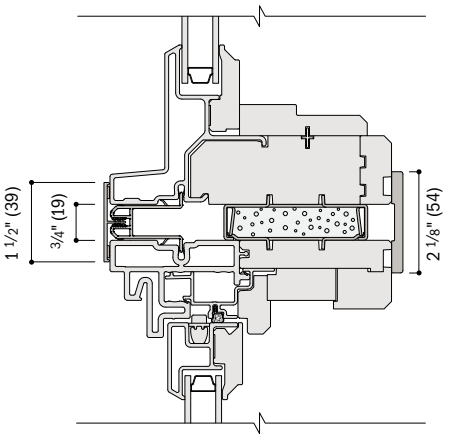

Fixed Transom Over Double-Hung
Clip

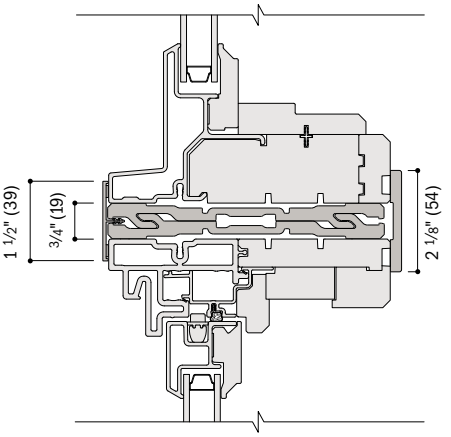

Fixed Transom Over Double-Hung
Fiberglass

Horizontal (stack) Easy Connect Fiberglass Joining Details

Scale 1 1/2" (38) = 1'-0" (305) — 1:8

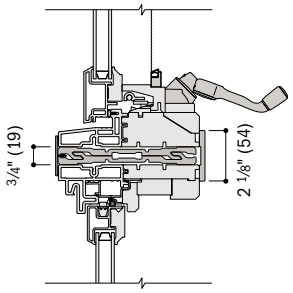

Venting Transom Over Double-Hung

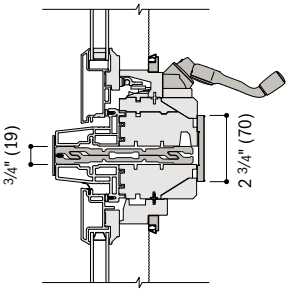

Casement/Awning Over Casement/Awning

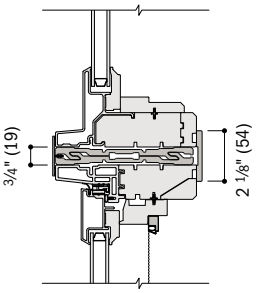

Fixed Transom Over Casement/Awning

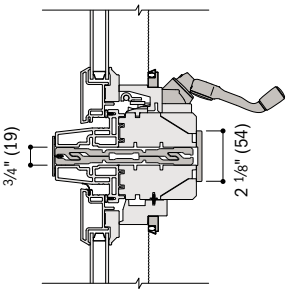

Venting Transom Over Casement/Awning

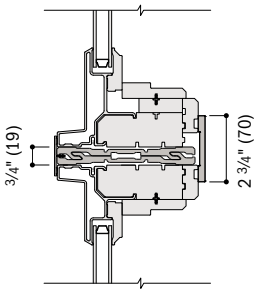

Picture Over Picture

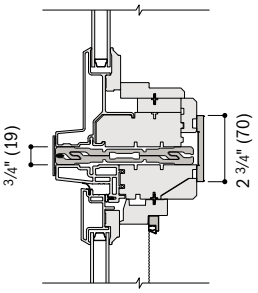

Picture Over Casement/Awning

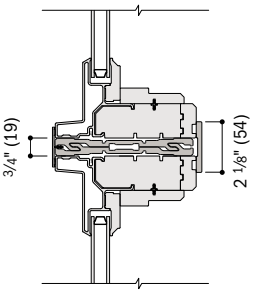

Fixed Transom Over Picture

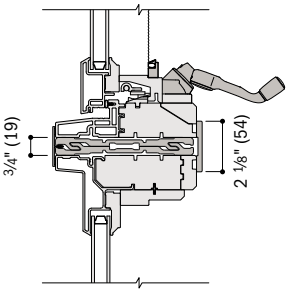

Venting Transom Over Picture

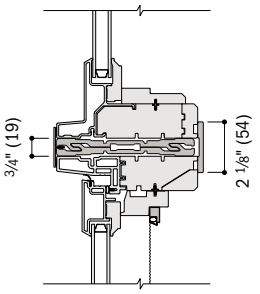

Fixed Transom Over Venting Transom

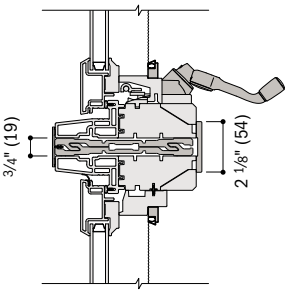

Venting Transom Over Venting Transom

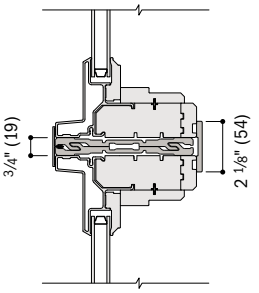

Fixed Transom Over Fixed Transom

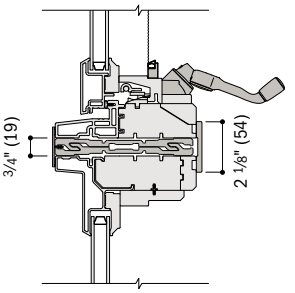

Venting Transom Over Fixed Transom

For more information on joining, refer to the combination designs section starting on page 196.

- Light-colored areas are parts included with window. Dark-colored areas are additional Andersen® parts required to complete window assembly as shown.
- Dimensions in parentheses are in millimeters.
- **Minimum rough openings may need to be increased to allow for use of building wraps, flashing, sill panning, brackets, fasteners or other items. See installation information on pages 226-227.**
- Details are for illustration only and are not intended to represent product installation methods or materials. Refer to product installation instructions at andersenwindows.com.
- Structural performance of any combination is only as high as the lowest structural performance of any individual product or join in the combination.
- Fixed transom windows (ATF) can only be joined to venting transoms windows (ATV) vertically and double-hung windows (ADH) can only be joinined to double-hung windows (ADH) vertically. Not all combinations are shown above; visit andersenwindows.com or contact your Andersen supplier for additional joining details.

Custom Sizes and Specification Formulas

A-Series custom-size windows are available in 1/8" (3) increments between minimum and maximum widths and heights shown. Some restrictions apply. **For specialty windows and windows with PG upgrade, contact your Andersen supplier for custom sizing and specfications.** Clear opening dimensions for custom-sized windows are also available in iQ+; contact your Andersen supplier.

Casement Windows (venting & stationary)

Dual-Pane

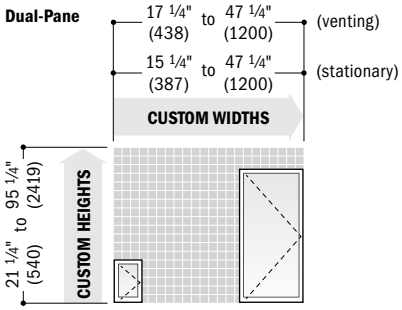

Triple-Pane

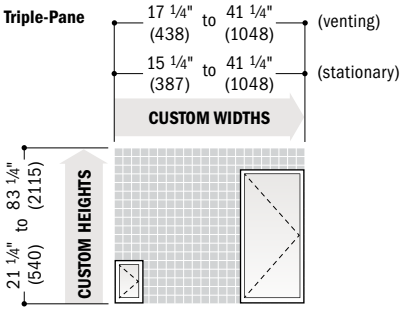

Clear Opening 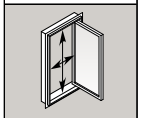	**Width** = *Clear opening width for custom-sized casement windows is based on window width and hinge type. Contact you Andersen supplier for clear opening width.* **Height** = window height − 5.65" (144)	**Minimum R.O.**	**Width** = window width + 3/4" (19) **Height** = window height + 3/4" (19)
Vent Opening 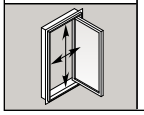	**Width** = window width − 6.54" (166) **Height** = window height − 5.65" (144)	**Unobst. Glass**	**Width** = window width − 6.65" (169) **Height** = window height − 7.45" (189)

• All casement windows wider than 2'-3 1/4" (692) and taller than 3'-11 1/4" (1200) meet or exceed clear opening area of 5.7 sq. ft. or .053 m², clear opening width of 20" (508) and clear opening height of 24" (610).

Awning Windows (venting & stationary)

Dual-Pane

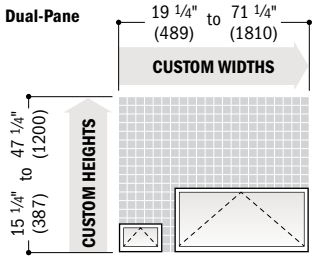

Triple-Pane

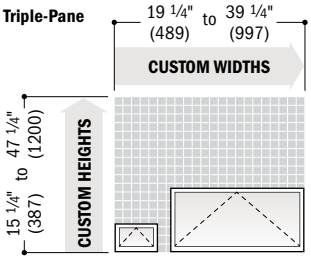

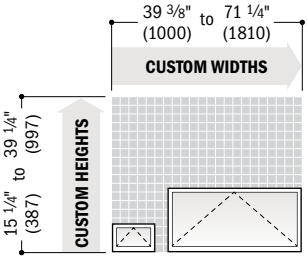

Clear Opening 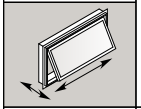	**Width** = window width − 4.94" (125) **Depth** = 5.88" (149)	**Minimum R.O.**	**Width** = window width + 3/4" (19) **Height** = window height + 3/4" (19)
Vent Opening 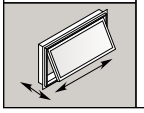	**Width** = window width − 4.94" (125) **Depth** = 5.88" (149)	**Unobst. Glass**	**Width** = window width − 6.65" (169) **Height** = window height − 7.45" (189)

• Awning windows do not meet clear opening area of 5.7 sq. ft. or 0.53 m², clear opening width of 20" (508) and clear opening height of 24" (610).

• Dimensions in parentheses are in millimeters.
• **Clear Opening** formulas provide dimensions for determining area available for egress. **Vent Opening** formulas provide dimensions for determining area available for passage of air. **Minimum R.O.** (minimum rough opening) formulas provide minimum rough opening width and height dimensions. **Unobst. Glass** (unobstructed glass) formulas provide dimensions for determining area available for passage of light.

Double-Hung Windows

Equal Sash Ratio

Dual-Pane & Triple-Pane

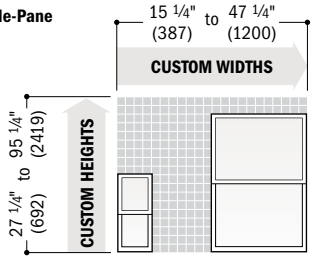

Clear Opening*	**Width** = window width − 4.06" (103) **Height** = (window height ÷ 2) − 4.65" (118)	**Minimum R.O.**	**Width** = window width + 3/4" (19) **Height** = window height + 3/4" (19)
Vent Opening*	**Width** = window width − 4.06" (103) **Height** = (window height ÷ 2) − 3.84" (98)	**Unobst. Glass**	**Width** = window width − 6.65" (169) **Single Sash Height** = (window height − 9.65" (245)) ÷ 2 **Total Sash Height** = window height − 9.65" (245)

• Windows wider than 3'-1 1/4" (946) and taller than 4'-11 1/4" (1505) meet or exceed clear opening area of 5.7 sq. ft. or .053 m², clear opening width of 20" (508) and clear opening height of 24" (610).
• Two locks are standard for windows with triple-pane glass or art glass on sizes wider than 1'-7 1/8" (486).
• Two locks are standard for windows with dual-pane glass on sizes wider than 3'-3 1/4" (997).
*Windows with triple-pane or art glass wider than 2'-11 1/4" (895) and taller than 5'-11 1/4" (1810) may have limited sash travel. Contact your Andersen supplier for clear opening and vent opening specifications.

2:3 Cottage Sash Ratio

Dual-Pane & Triple-Pane

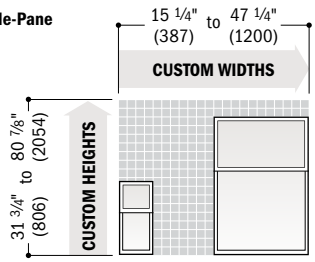

3:2 Reverse Cottage Sash Ratio

Dual-Pane & Triple-Pane

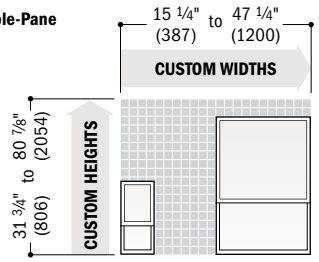

Clear Opening*	**Width** = window width − 4.06" (103) **Height** = (window height − 4.18" (106)) x 0.4 − 2.01" (51)	**Minimum R.O.**	**Width** = window width + 3/4" (19) **Height** = window height + 3/4" (19)
Vent Opening*	**2:3 Cottage Sash Ratio** **Width** = window width − 4.06" (103) **Height** = (window height − 4.18" (106)) x 0.4 − 2.01" (51) + 0.8" (20) **3:2 Reverse Cottage Sash Ratio** **Width** = window width − 4.06" (103) **Height** = (window height − 4.18" (106)) x 0.4 − 2.01" (51) + 2.2" (56)	**Unobst. Glass**	**2:3 Cottage Sash Ratio** **Width** = window width − 6.65" (169) **Upper Sash Height** = (window height − 9.65" (245)) x 0.4 **Lower Sash Height** = (window height − 9.65" (245)) x 0.6 **Total Sash Height** = window height − 9.65" (245) **3:2 Reverse Cottage Sash Ratio** **Width** = window width − 6.65" (169) **Upper Sash Height** = (window height − 9.65" (245)) x 0.6 **Lower Sash Height** = (window height − 9.65" (245)) x 0.4 **Total Sash Height** = window height − 9.65" (245)

• Two locks are standard for windows with triple-pane glass or art glass on sizes wider than 1'-7 1/8" (486).
• Two locks are standard for windows with dual-pane glass on sizes wider than 3'-3 1/4" (997).
*Windows with triple-pane or art glass wider than 2'-11 1/4" (895) and taller than 4'-11 1/4" (1505) may have limited sash travel. Contact your Andersen supplier for clear opening and vent opening specifications.

• Dimensions in parentheses are in millimeters.
• **Clear Opening** formulas provide dimensions for determining area available for egress. **Vent Opening** formulas provide dimensions for determining area available for passage of air. **Minimum R.O.** (minimum rough opening) formulas provide minimum rough opening width and height dimensions. **Unobst. Glass** (unobstructed glass) formulas provide dimensions for determining area available for passage of light.

Picture Windows

Dual-Pane & Triple-Pane

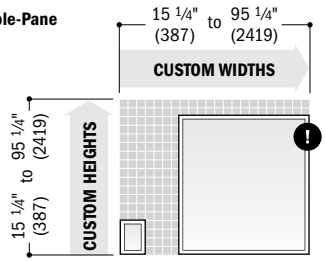

Largest dimensions are
95 1/4" (2419) x 71 1/4" (1810)
or 71 1/4" (1810) x 95 1/4" (2419)

Minimum R.O.	**Width** = window width + 3/4" (19) **Height** = window height + 3/4" (19)	**Unobst. Glass**	**Width** = window width − 6.65" (169) **Height** = window height − 7.45" (189)

Fixed Transom Windows

Dual-Pane & Triple-Pane

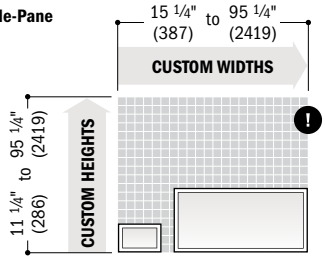

Largest dimensions are
95 1/4" (2419) x 71 1/4" (1810)
or 71 1/4" (1810) x 95 1/4" (2419)

Minimum R.O.	**Width** = window width + 3/4" (19) **Height** = window height + 3/4" (19)	**Unobst. Glass**	**Width** = window width − 6.65" (169) **Height** = window height − 6.65" (169)

Venting Transom Windows

Dual-Pane & Triple-Pane

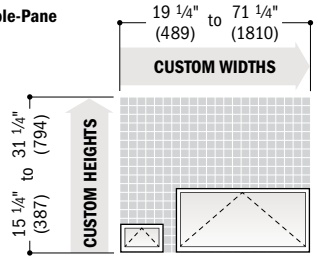

Clear Opening	**Width** = window width − 4.94" (125) **Depth** = 5.88" (149)	**Minimum R.O.**	**Width** = window width + 3/4" (19) **Height** = window height + 3/4" (19)
Vent Opening	**Width** = window width − 4.94" (125) **Depth** = 5.88" (149)	**Unobst. Glass**	**Height** = window height − 6.65" (169) **Width** = window width − 6.65" (169)

• Venting transom windows do not meet clear opening area of 5.7 sq. ft. or 0.53 m², clear opening width of 20" (508) and clear opening height of 24" (610).

• Dimensions in parentheses are in millimeters.
• **Clear Opening** formulas provide dimensions for determining area available for egress. **Vent Opening** formulas provide dimensions for determining area available for passage of air. **Minimum R.O.** (minimum rough opening) formulas provide minimum rough opening width and height dimensions. **Unobst. Glass** (unobstructed glass) formulas provide dimensions for determining area available for passage of light.

NOTES

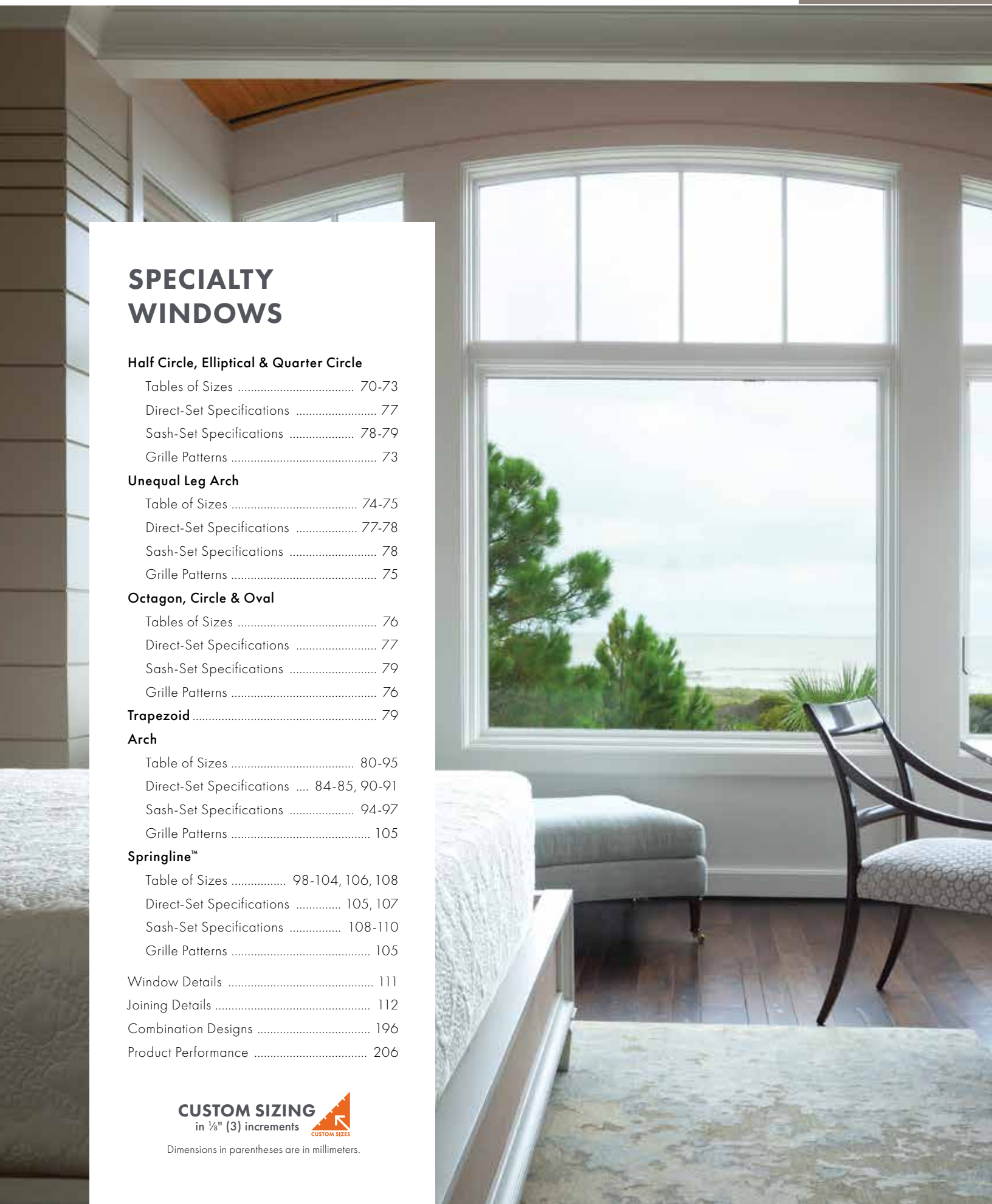

SPECIALTY WINDOWS

Half Circle, Elliptical & Quarter Circle
- Tables of Sizes 70-73
- Direct-Set Specifications 77
- Sash-Set Specifications 78-79
- Grille Patterns 73

Unequal Leg Arch
- Table of Sizes 74-75
- Direct-Set Specifications 77-78
- Sash-Set Specifications 78
- Grille Patterns 75

Octagon, Circle & Oval
- Tables of Sizes 76
- Direct-Set Specifications 77
- Sash-Set Specifications 79
- Grille Patterns 76

Trapezoid 79

Arch
- Table of Sizes 80-95
- Direct-Set Specifications 84-85, 90-91
- Sash-Set Specifications 94-97
- Grille Patterns 105

Springline™
- Table of Sizes 98-104, 106, 108
- Direct-Set Specifications 105, 107
- Sash-Set Specifications 108-110
- Grille Patterns 105

Window Details 111
Joining Details 112
Combination Designs 196
Product Performance 206

CUSTOM SIZING
in ⅛" (3) increments
CUSTOM SIZES

Dimensions in parentheses are in millimeters.

FEATURES

FRAME

A The frame is constructed with wood and protected with a heavy-duty extruded aluminum cladding. Standard cladding finish meets AAMA 2604. An optional finish that meets the AAMA 2605 standard is also available. This construction produces a rigid frame and a low-maintenance, durable exterior with no exposed ends.

B A vinyl installation flange extends 1½" (38) around the perimeter of the unit to help properly position the unit in the opening. Installation clips are standard for increased structural anchoring to building members. Mounted around the frame perimeter, the clips rotate into position and can be bent into place against the framing members to suit all jamb conditions.

C Wood frame members are treated with a water-repellent preservative for long-lasting* protection and performance. Radii are made of laminated continuous veneers. Lineal components are solid or engineered wood with a pine core.

SASH

D Natural wood interiors are treated with a water-repellent wood preservative for long-lasting* protection and performance.

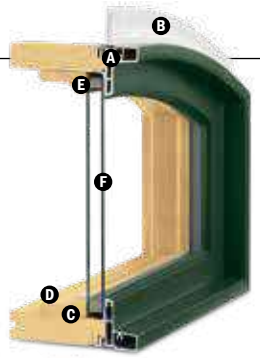

Direct-Set Arch Window

Available in direct-set or sash-set construction. Direct-set windows have glass glazed directly into the frame and maximize glass area. Sash-set windows feature a stationary sash and provide common sight lines with other A-Series venting windows. Sash are constructed with wood and protected with a heavy-duty aluminum cladding. This construction produces a rigid sash and a low-maintenance durable exterior*.

Traditional architectural style:

- Classic chamfer detailing
- Look of mortise-and-tenon joinery

E Silicone glazing filet bead combined with two-sided tape provides superior weathertightness.

F GLASS

In addition to stainless steel glass spacers, black or white glass spacers are available to allow the spacer to blend in with the unit color.

¾" (19) dual-pane glass construction provides exceptional energy performance. High-Performance dual-pane glass options include:

- Low-E4® glass
- Low-E4 HeatLock® glass
- Low-E4 SmartSun™ glass
- Low-E4 SmartSun HeatLock glass
- Low-E4 Sun glass

For even greater energy performance, 1" (25) triple-pane glass is available in these options:

- Low-E4 glass
- Low-E4 Enhanced glass
- Low-E4 Enhanced HeatLock glass
- Low-E4 SmartSun glass
- Low-E4 SmartSun Enhanced glass
- Low-E4 SmartSun Enhanced HeatLock glass

Tempered glass and other glass options are available; see your Andersen supplier.

A removable translucent film helps shield the glass from damage during delivery and construction, and simplifies finishing at the job site.

Patterned Glass

Patterned glass options are available. See page 15 for more details.

Between-the-Glass Art Glass

Available in a variety of original patterns. For details, see page 16 or visit **andersenwindows.com/artglass.**

PERFORMANCE OPTIONS

Performance Grade (PG) Upgrades

Performance Grade (PG) upgrades are now available for all A-Series windows in most sizes of standard non-impact windows allowing these units to achieve higher performance ratings. PG upgrade ratings are more comprehensive than Design Pressure (DP) ratings for measuring product performance. For up-to-date performance information of individual products, visit **andersenwindows.com**.

StormWATCH® PROTECTION

A-Series windows available with Stormwatch® Protection include impact-resistant glass in addition to structural upgrades for coastal areas. For a copy of the A-Series Coastal Product Guide, visit **andersenwindows.com/coastal**.

EXTERIORS & INTERIORS

EXTERIOR COLORS

White | Canvas | Prairie Grass | Sandtone | Terratone | Cocoa Bean | Dark Bronze | Red Rock | Forest Green | Dove Gray | Black

INTERIOR WOOD SPECIES

Pine | Maple | Vertical Grain Douglas Fir | Oak | Mahogany** | Cherry

FACTORY-FINISHED INTERIORS

Clear Coat | Honey | Cinnamon | Mocha | Russet | Espresso

All wood interiors are unfinished unless a finish is specified. Clear coat available on all wood species; all other factory finishes on pine, maple and oak. Shown above on pine. Naturally occurring variations in grain, color and texture of wood make each window one of a kind.

INTERIOR PAINT COLORS

White | Birch Bark | Primed (for paint) | Canvas | Sandtone | Dark Bronze | Black

Also available in 11 exterior colors shown above; contact your Andersen supplier. Painted colors on pine or maple.

4-TONE INTERIORS

Mix and match up to four interior wood species, stains and/or colors for your window's frame, sash, grilles and extension jambs to achieve a look unique to your project.

*Visit andersenwindows.com/warranty for details.

**Actual wood species is either Sapele or Sipo, both non-endangered species grown in Africa, with color and characteristics similar to Central American mahoganies.

Printing limitations prevent exact duplication of colors. See your Andersen supplier for actual color samples.

Dimensions in parentheses are in millimeters.

ACCESSORIES Sold Separately

FRAME

Extension Jambs

Extension jambs are available in pine, maple, vertical grain Douglas fir, oak, mahogany* and cherry, precut to fit your unit. Available in 1/16" (1.5) increments up to 7 1/8" (181) and can be prefinished in six stain colors as well as all interior paint options to match the interior of the unit. This option is also available factory applied.

Interior Arch Casing

Available in Colonial or Ranch styles. Arch casings come with transition blocks or plinth blocks, depending on the product. For easy integration and consistency, casing dimensions are consistent with Wood Moulding and Millwork Producers Association specifications. Available in pine, maple, vertical grain Douglas fir, oak, mahogany* and cherry. Additional species are available.

2 1/4" (57) Colonial style. WM366

2 1/2" (64) Colonial style. WM351

3 1/2" (89) Colonial style. WM444

2 1/4" (57) Ranch style. WM324
2 1/2" (64) Ranch style. WM315

Plinth Blocks

For enhancing casing transitions. Decorated with a radial sunburst, or use the reverse side flush face.

For arch windows with 2 1/4" (57) and 2 1/2" (64) casing, use 2 7/8" (73) x 4" (102) size plinth block. For arch windows with 3 1/2" (89) casing, use 3 7/8" (98) x 5 1/4" (133) size plinth block.

For half circle, circle, elliptical and oval windows with 2 1/4" (57) and 2 1/2" (64) casing, use 2 7/8" (73) size plinth block. For half circle, circle, elliptical and oval windows with 3 1/2" (89) casing, use 3 7/8" (98) size plinth block.

GRILLES

Grilles are available in a variety of configurations and widths. See page 19 for details.

EXTERIOR TRIM

Available with Andersen exterior trim. See exterior trim section starting on page 189.

*Actual wood species is either Sapele or Sipo, both non-endangered species grown in Africa, with color and characteristics similar to Central American mahoganies.

SPECIALTY SHAPES

A-Series specialty windows are available in a variety of shapes and sizes. Profiles may vary dependent upon shape. Standard shapes include half circle, quarter circle, elliptical, circle, oval, octagon, Springline,™ unequal leg arch, arch, trapezoid and rectangle. Additional shapes, shown below on the right, are available by special order.

Half Circle

Quarter Circle

Elliptical

Circle

Oval

Octagon

Springline

Unequal Leg Arch

Arch

Trapezoid

Rectangle

For standard sizes of rectangle (**ATRD** and **ATR**) windows, see your Andersen supplier.

Right Triangle

Isosceles Triangle

Diamond

Angled Pentagon

Peak Pentagon

Quatrefoil

Parallelogram

Hexagon

Unequal Hexagon

Gothic

Extended Gothic

Springline Flanker

Raised Eyebrow

Extended Raised Eyebrow

Extended Reverse Eyebrow

Extended Reverse Partial Eyebrow

Partial Eyebrow

Eyebrow

Reverse Partial Eyebrow

Extended Elliptical

Partial Elliptical

Partial Extended Arch

Partial Arch

Quarter Arch

Dimensions in parentheses are in millimeters.

Table of Direct-Set Half Circle Window Sizes

Scale 1/8" (3) = 1'-0" (305) – 1:96

Notes on the next page also apply to this page.

| | | |

Table of Direct-Set Elliptical Window Sizes

Scale 1/8" (3) = 1'-0" (305) – 1:96

Window Dimension	3'-11 1/4" (1200)	4'-3 1/4" (1302)	4'-7 1/4" (1403)
Minimum Rough Opening	4'-0" (1219)	4'-4" (1321)	4'-8" (1423)
Unobstructed Glass	41 9/16" (1056)	45 3/4" (1162)	50 3/8" (1280)

ATETD40

ATETD44

ATETD48

4'-11 1/4" (1505)	5'-3 1/4" (1607)	5'-7 1/4" (1708)
5'-0" (1524)	5'-4" (1626)	5'-8" (1728)
54 11/16" (1390)	59 1/16" (1499)	63 3/16" (1604)

ATETD50

ATETD54

ATETD58

5'-11 1/4" (1810)	6'-3 1/4" (1911)	6'-7 1/4" (2013)
6'-0" (1828)	6'-4" (1930)	6'-8" (2033)
66 13/16" (1696)	70 13/16" (1799)	75 1/8" (1907)

ATETD60

ATETD64

ATETD68

6'-11 1/4" (2115)	7'-3 1/4" (2216)
7'-0" (2134)	7'-4" (2235)
79 3/16" (2011)	82 7/8" (2105)

ATETD70

ATETD74

7'-10 7/16" (2399)	7'-11 1/4" (2419)
7'-11" (2413)	8'-0" (2438)
90 1/16" (2288)	90 7/8" (2309)

ATETD711

ATETD80

8'-10 7/16" (2704)

8'-11" (2718)

102 1/8" (2594)

ATETD811

- "Window Dimension" always refers to outside frame-to-frame dimension.
- "**Minimum Rough Opening**" **dimensions may need to be increased to allow for use of building wraps, flashing, sill panning, brackets, fasteners or other items. See pages 226-227 for more details.**
- Dimensions in parentheses are in millimeters.

Custom-size windows are available in 1/8" (3) increments. Contact your Andersen supplier for more information.

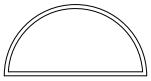

Direct-Set Half Circle

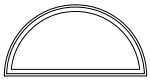

Sash-Set Half Circle

Direct-Set Elliptical

Sash-Set Elliptical

Direct-set half circle (**ATCTD**) **and direct-set elliptical** (**ATETD**) **window sizes shown.** Use window and minimum rough opening dimensions shown for sash-set half circle (**ATCT**) and sash-set elliptical (**ATET**) window sizes. For sash-set unobstructed glass dimensions, see page 78.

All sizes shown, along with custom sizes, are available with PG upgrade.

Grille patterns shown on page 73. Details shown on page 111.

Table of Direct-Set Quarter Circle Window Sizes

Scale ⅛" (3) = 1'-0" (305) — 1:96

Notes on the next page also apply to this page.

Window Dimension	1'-11 ¼" (591)	2'-0 ⅛" (613)	2'-3 ¼" (692)	2'-5 ¼" (743)	2'-6 ⅛" (765)
Minimum Rough Opening	2'-0" (610)	2'-1" (635)	2'-4" (711)	2'-6" (762)	2'-7" (787)
Unobstructed Glass	19 3/16" (487)	20 1/16" (509)	23 3/16" (589)	25 3/16" (639)	26 1/16" (662)

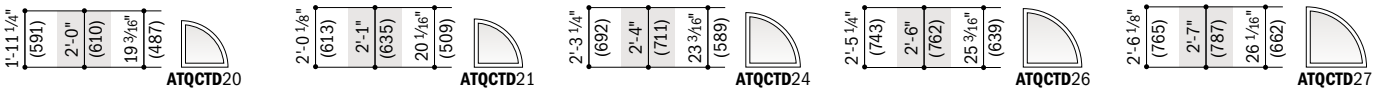

	2'-8 3/8" (822)	2'-9 ¼" (845)	2'-11 ¼" (895)	3'-0 ⅛" (918)	3'-1 ¼" (946)
	2'-9" (838)	2'-10" (864)	3'-0" (914)	3'-1" (940)	3'-2" (965)
	28 5/16" (719)	29 3/16" (741)	31 3/16" (792)	32 1/16" (814)	33 3/16" (843)

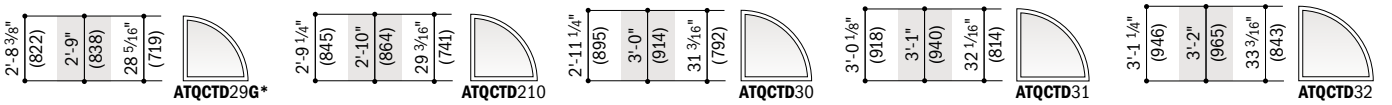

	3'-3 ¼" (997)	3'-5 ¼" (1048)	3'-7 ¼" (1099)	3'-8 3/8" (1127)	3'-11 ¼" (1200)
	3'-4" (1016)	3'-6" (1067)	3'-8" (1118)	3'-9" (1143)	4'-0" (1219)
	35 3/16" (894)	37 3/16" (945)	39 3/16" (996)	40 5/16" (1024)	43 3/16" (1097)

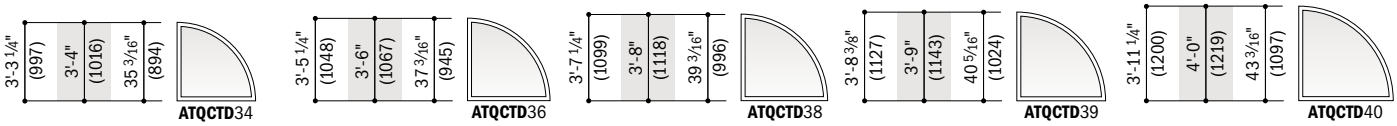

4'-7 ¼" (1403)	4'-11 ¼" (1505)	5'-3 ¼" (1607)	5'-7 ¼" (1708)
4'-8" (1422)	5'-0" (1524)	5'-4" (1626)	5'-8" (1727)
51 ¼" (1301)	55 ¼" (1402)	59 ¼" (1504)	63 ¼" (1606)

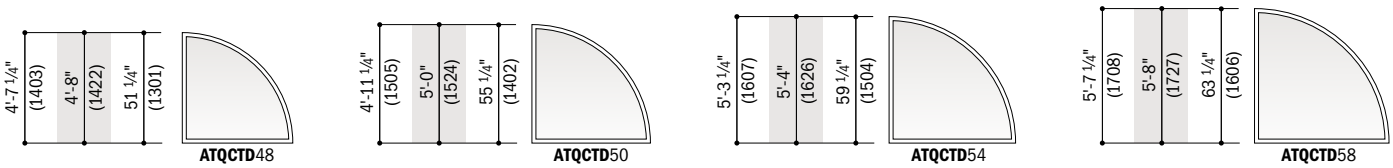

6'-3 ¼" (1911)	6'-7 ¼" (2013)	6'-11 ¼" (2115)
6'-4" (1930)	6'-8" (2032)	7'-0" (2134)
71 ¼" (1809)	75 ¼" (1911)	79 ¼" (2012)

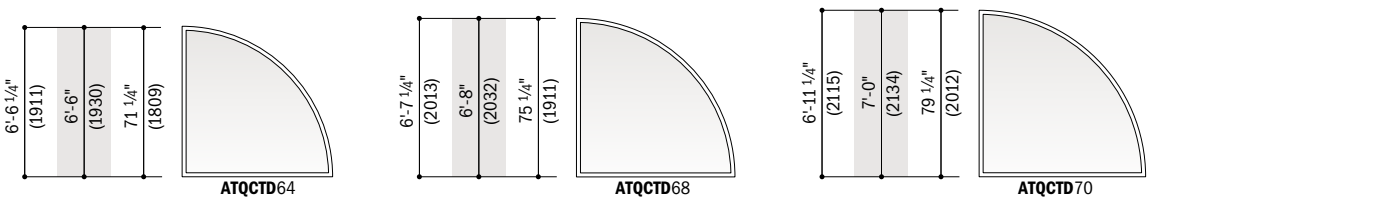

- "Window Dimension" always refers to outside frame-to-frame dimension.
- "**Minimum Rough Opening**" **dimensions may need to be increased to allow for use of building wraps, flashing, sill panning, brackets, fasteners or other items. See pages 226-227 for more details.**
- Dimensions in parentheses are in millimeters.

*Sized to fit over a stationary A-Series gliding patio door.

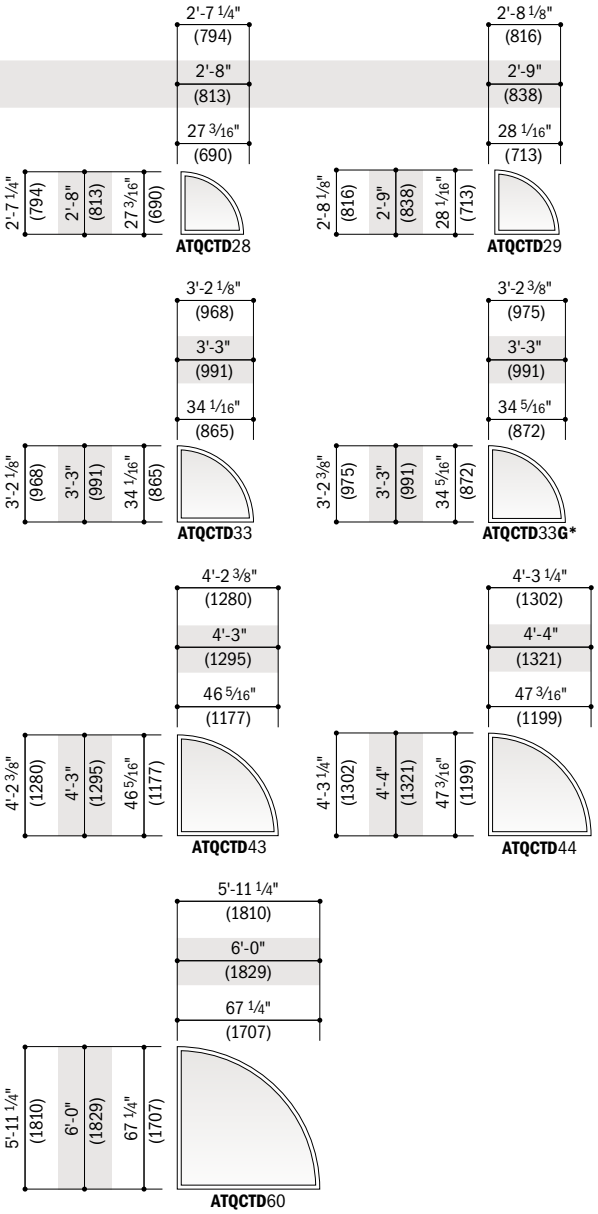

- "Window Dimension" always refers to outside frame-to-frame dimension.
- **"Minimum Rough Opening" dimensions may need to be increased to allow for use of building wraps, flashing, sill panning, brackets, fasteners or other items. See pages 226-227 for more details.**
- Dimensions in parentheses are in millimeters.
- *Sized to fit over a stationary A-Series gliding patio door.

Custom-size windows are available in 1/8" (3) increments.

Contact your Andersen supplier for more information.

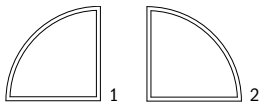

Direct-Set Quarter Circle

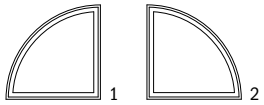

Sash-Set Quarter Circle

Direct-set quarter circle (ATQCTD) window sizes shown. Choose left facing (1) or right facing (2) as viewed from the exterior. Use window and minimum rough opening dimensions shown for sash-set quarter circle (**ATQCT**) window sizes. For sash-set unobstructed glass dimensions, see page 79.

All sizes shown, along with custom sizes, are available with PG upgrade.

Grille patterns shown below. Details shown on page 111.

Grille Patterns

	Colonial	Renaissance	Sunburst
Half Circle			
Quarter Circle			
Elliptical			

Number of lights and overall pattern varies with window size. Patterns may not be available in all configurations or sizes. Specified equal light and custom patterns are also available. For more grille options, see page 19 or visit **andersenwindows.com/grilles**.

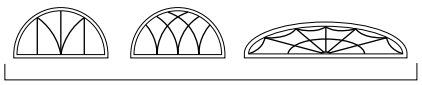

Custom Examples

Table of Direct-Set Unequal Leg Arch Window Sizes

Scale 1/8" (3) = 1'-0" (305) — 1:96

Notes on the next page also apply to this page.

Window Dimension	1'-3 1/4" (387)	1'-7 1/4" (489)	1'-11 1/4" (591)	2'-0 1/8" (613)	2'-3 1/4" (692)	2'-5 1/4" (743)	2'-6 1/8" (765)	2'-7 1/4" (794)	2'-8 1/8" (816)	2'-8 3/8" (822)
Minimum Rough Opening	1'-4" (406)	1'-8" (508)	2'-0" (610)	2'-1" (635)	2'-4" (711)	2'-6" (762)	2'-7" (787)	2'-8" (813)	2'-9" (838)	2'-9" (838)

CUSTOM SIZES AVAILABLE

Radius	36" (914)	42" (1067)	48" (1219)	60" (1524)	60" (1524)	60" (1524)	66" (1676)	66" (1676)	66" (1676)	66" (1676)
Chord Height	3 3/8" (86)	4 5/8" (118)	6" (152)	5 1/16" (129)	6 1/2" (166)	7 5/8" (194)	7 1/4" (185)	7 1/8" (181)	8 3/8" (212)	8 1/2" (216)

CUSTOM SIZES AVAILABLE

Shoulder Height	36" (914)	42" (1067)	48" (1219)	60" (1524)	60" (1524)	60" (1524)	66" (1676)	66" (1676)	66" (1676)	66" (1676)
1'-7 1/4" (489) / 1'-8" (508)	15 7/8" (403) **ATUD**1418	14 5/8" (371) **ATUD**1818	13 1/4" (337) **ATUD**2018	14 3/16" (360) **ATUD**2118	12 3/4" (323) **ATUD**2418	11 5/8" (295) **ATUD**2618	12" (304) **ATUD**2718	12 1/8" (308) **ATUD**2818	10 7/8" (277) **ATUD**2918	10 3/4" (273) **ATUD**2918**G***
1'-9 1/4" (437) / 1'-10" (559)	17 7/8" (454) **ATUD**14110	16 5/8" (421) **ATUD**18110	15 1/4" (387) **ATUD**20110		14 3/4" (374) **ATUD**24110	13 5/8" (346) **ATUD**26110		14 1/8" (359) **ATUD**28110		
1'-11 1/4" (591) / 2'-0" (610)	19 7/8" (505) **ATUD**1420	18 5/8" (472) **ATUD**1820	17 1/4" (438) **ATUAD**2020	18 3/16" (462) **ATUD**2120	16 3/4" (425) **ATUD**2420	15 5/8" (397) **ATUD**2620	16" (406) **ATUD**2720	16 1/8" (410) **ATUD**2820	14 7/8" (379) **ATUD**2920	14 3/4" (375) **ATUD**2920**G***
2'-3 1/4" (692) / 2'-4" (711)	23 7/8" (606) **ATUD**1424	22 5/8" (574) **ATUD**1824	21 1/4" (540) **ATUD**2024	22 3/16" (564) **ATUD**2124	20 3/4" (526) **ATUD**2424	19 5/8" (498) **ATUD**2624	20" (507) **ATUD**2724	20 1/8" (511) **ATUD**2824	18 7/8" (480) **ATUD**2924	18 3/4" (476) **ATUD**2924**G***
2'-7 1/4" (794) / 2'-8" (813)	27 7/8" (708) **ATUD**1428	26 5/8" (675) **ATUD**1828	25 1/4" (641) **ATUD**2028	26 3/16" (665) **ATUD**2128	24 3/4" (628) **ATUD**2428	23 5/8" (600) **ATUD**2628	24" (609) **ATUD**2728	24 1/8" (613) **ATUD**2828	22 7/8" (582) **ATUD**2928	22 3/4" (578) **ATUD**2928**G***
2'-11 1/4" (895) / 3'-0" (914)	31 7/8" (810) **ATUD**1430	30 5/8" (777) **ATUD**1830	29 1/4" (743) **ATUD**2030	30 3/16" (767) **ATUD**2130	28 3/4" (729) **ATUD**2430	27 5/8" (702) **ATUD**2630	28" (710) **ATUD**2730	28 1/8" (714) **ATUD**2830	26 7/8" (683) **ATUD**2930	26 3/4" (679) **ATUD**2930**G***

Window Dimension	3'-3 1/4" (997)	3'-7 1/4" (1099)	3'-8 3/8" (1127)	3'-11 1/4" (1200)	4'-2 3/8" (1280)	4'-3 1/4" (1302)	4'-7 1/4" (1403)
Minimum Rough Opening	3'-4" (1016)	3'-8" (1118)	3'-9" (1143)	4'-0" (1219)	4'-3" (1295)	4'-4" (1321)	4'-8" (1422)

CUSTOM SIZES AVAILABLE

Radius	84" (2133)	96" (2438)	96" (2438)	96" (2438)	108" (2743)	108" (2743)	120" (3048)
Chord Height	9 3/4" (247)	10 1/4" (261)	10 7/8" (276)	12 7/16" (316)	12 1/2" (317)	12 15/16" (329)	13 1/2" (342)

CUSTOM SIZES AVAILABLE

Shoulder Height	84" (2133)	96" (2438)	96" (2438)	96" (2438)	108" (2743)	108" (2743)	120" (3048)
1'-7 1/4" (489) / 1'-8" (508)	9 1/2" (242) **ATUD**3418	9" (228) **ATUD**3818	8 3/8" (213) **ATUD**3918				
1'-9 1/4" (437) / 1'-10" (559)	11 1/2" (293) **ATUD**34110	11" (279) **ATUD**38110		8 13/16" (224) **ATUD**40110		8 5/16" (211) **ATUD**44110	7 3/4" (198) **ATUD**48110
1'-11 1/4" (591) / 2'-0" (610)	13 1/2" (344) **ATUD**3420	13" (329) **ATUD**3820	12 3/8" (314) **ATUD**3920	10 13/16" (275) **ATUD**4020	10 3/4" (274) **ATUD**4320	10 5/16" (262) **ATUD**4420	9 3/4" (248) **ATUD**4820
2'-3 1/4" (692) / 2'-4" (711)	17 1/2" (445) **ATUD**3424	17" (431) **ATUD**3824	16 3/8" (416) **ATUD**3924	14 13/16" (376) **ATUD**4024	14 3/4" (375) **ATUD**4324	14 5/16" (364) **ATUD**4424	13 3/4" (350) **ATUD**4824
2'-7 1/4" (794) / 2'-8" (813)	21 1/2" (547) **ATUD**3428	21" (533) **ATUD**3828	20 3/8" (518) **ATUD**3928	18 13/16" (478) **ATUD**4028	18 3/4" (477) **ATUD**4328	18 5/16" (465) **ATUD**4428	17 3/4" (452) **ATUD**4828
2'-11 1/4" (895) / 3'-0" (914)	25 1/2" (648) **ATUD**3430	25" (634) **ATUD**3830	24 3/8" (619) **ATUD**3930	22 13/16" (579) **ATUD**4030	22 3/4" (579) **ATUD**4330	22 5/16" (567) **ATUD**4430	21 3/4" (553) **ATUD**4830

- "Window Dimension" always refers to outside frame-to-frame dimension.
- "**Minimum Rough Opening**" **dimensions may need to be increased to allow for use of building wraps, flashing, sill panning, brackets, fasteners or other items. See pages 226-227 for more details.**
- Dimensions in parentheses are in millimeters.
- *Sized to fit over a stationary A-Series gliding patio door.

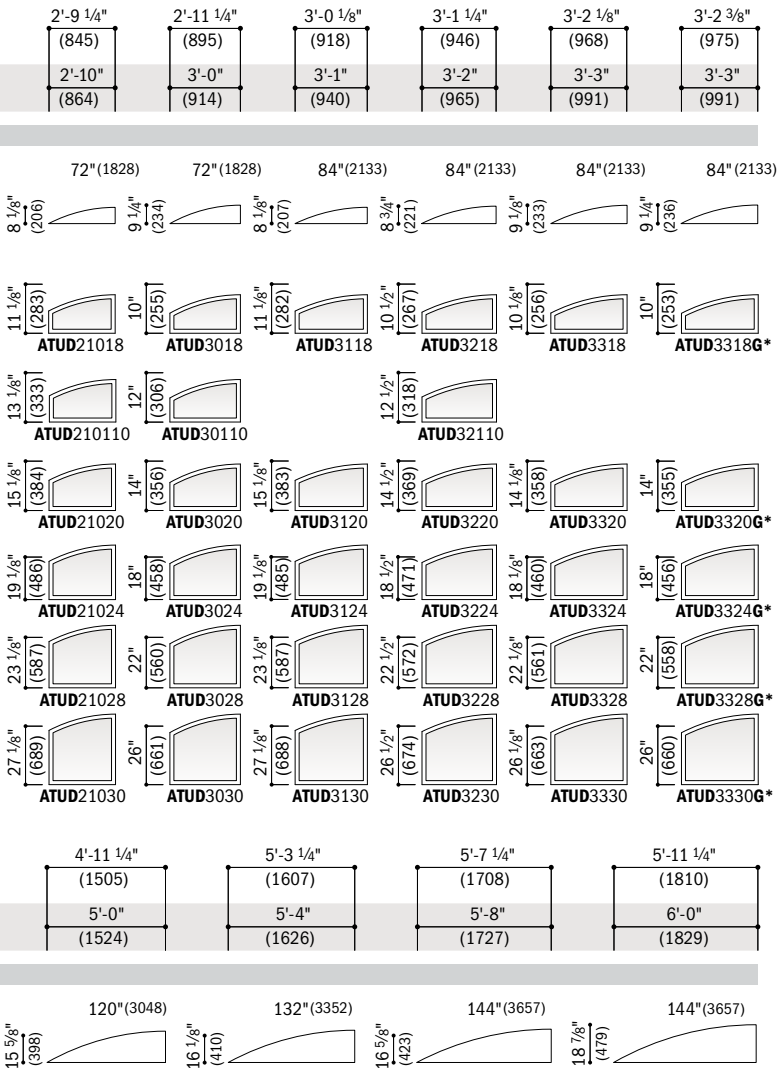

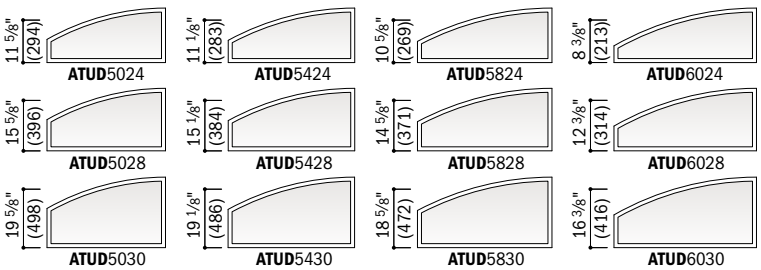

• "Window Dimension" always refers to outside frame-to-frame dimension.
• "**Minimum Rough Opening**" **dimensions may need to be increased to allow for use of building wraps, flashing, sill panning, brackets, fasteners or other items. See pages 226-227 for more details.**
• Dimensions in parentheses are in millimeters.
*Sized to fit over a stationary A-Series gliding patio door.

Custom-size windows are available in 1/8" (3) increments. Contact your Andersen supplier for more information.

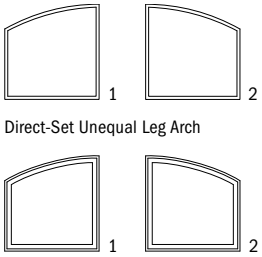

Direct-set unequal leg arch (**ATUD**) **window sizes shown.** Choose left facing (1) or right facing (2) as viewed from the exterior. Use window and minimum rough opening dimensions shown for sash-set unequal leg arch (**ATU**) window sizes.

All sizes shown, along with custom sizes, are available with PG upgrade.

Grille patterns shown below. Details shown on page 111.

Grille Patterns

	Colonial	Renaissance	Sunburst
Unequal Leg Arch	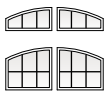	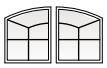	

Number of lights and overall pattern varies with window size. Patterns may not be available in all configurations or sizes. Specified equal light and custom patterns are also available. For more grille options, see page 19 or visit **andersenwindows.com/grilles**.

Table of Direct-Set Octagon Window Sizes

Scale 1/8" (3) = 1'-0" (305) – 1:96

Window Dimension	1'-11 1/4" (591)	2'-3 1/4" (692)	2'-11 1/4" (895)	3'-11 1/4" (1200)	5'-11 1/4" (1810)
Minimum Rough Opening	2'-0" (610)	2'-4" (711)	3'-0" (914)	4'-0" (1219)	6'-0" (1829)
Unobstructed Glass	19 1/4" (489)	23 1/4" (591)	31 1/4" (794)	43 1/4" (1099)	67 1/4" (1708)

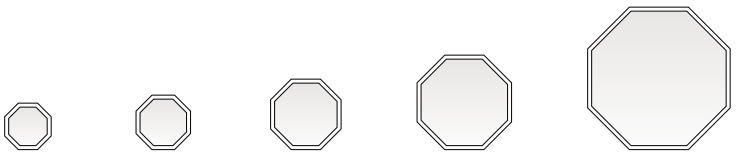

ATOCD20 **ATOCD**24 **ATOCD**30 **ATOCD**40 **ATOCD**60

Custom-size octagon and circle windows are available in 1/8" (3) increments. Contact your Andersen supplier for more information. Oval windows are not available in custom sizes.

Table of Direct-Set Circle Window Sizes

Scale 1/8" (3) = 1'-0" (305) – 1:96

Window Dimension	1'-11 1/4" (591)	2'-3 1/4" (692)	2'-11 1/4" (895)	3'-11 1/4" (1200)	5'-11 1/4" (1810)
Minimum Rough Opening	2'-0" (610)	2'-4" (711)	3'-0" (914)	4'-0" (1219)	6'-0" (1829)
Unobstructed Glass	19 1/4" (489)	23 1/4" (591)	31 1/4" (794)	43 1/4" (1099)	67 1/4" (1708)

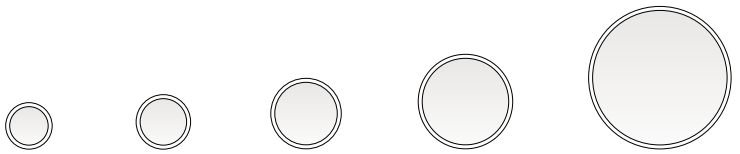

ACRD20 **ACRD**24 **ACRD**30 **ACRD**40 **ACRD**60

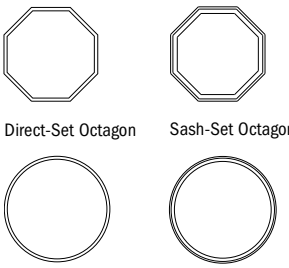

Direct-Set Octagon Sash-Set Octagon

Direct-Set Circle Sash-Set Circle

Direct-set octagon (**ATOCD**) **and direct-set circle** (**ACRD**) **window sizes shown.** Use window and minimum rough opening dimensions shown for sash-set octagon (**ATOC**) and sash-set circle (**ACR**) window sizes. For sash-set unobstructed glass dimensions, see page 79. All sizes shown, along with custom sizes, are available with PG upgrade.

Table of Direct-Set Oval Window Sizes

Scale 1/8" (3) = 1'-0" (305) – 1:96

Window Dimension	1'-7 1/4" (489)	1'-11 1/4" (591)	2'-11 1/4" (895)
Minimum Rough Opening	1'-8" (508)	2'-0" (610)	3'-0" (914)
Unobstructed Glass	15 1/4" (387)	19 1/4" (489)	31 1/4" (794)

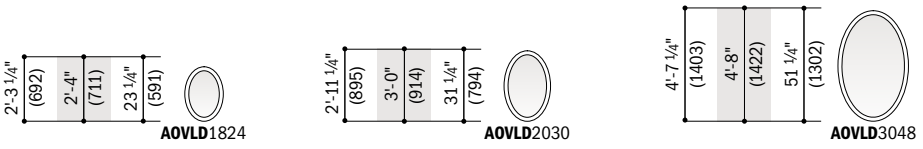

AOVLD1824 **AOVLD**2030 **AOVLD**3048

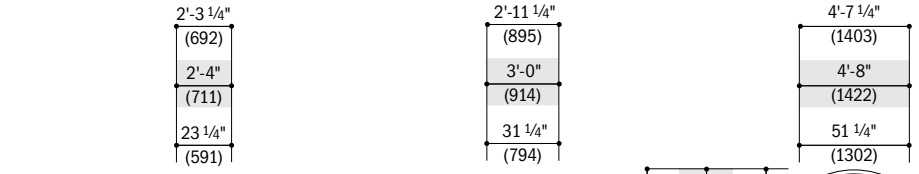

AOVLD2418 **AOVLD**3020 **AOVLD**4830

Direct-Set Oval

Oval windows are available direct-set only, and can be installed either vertically or horizontally. All sizes shown are available with PG upgrade.

Details shown on page 111.

Grille patterns are available in colonial, Renaissance, sunburst, specified equal light and custom patterns. For more grille options, see page 19 or visit **andersenwindows.com/grilles**.

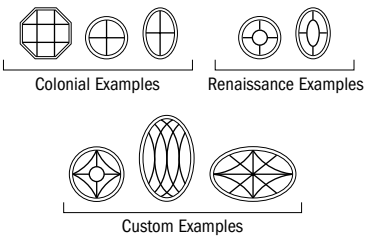

Colonial Examples Renaissance Examples

Custom Examples

- "Window Dimension" always refers to outside frame-to-frame dimension.
- **"Minimum Rough Opening" dimensions may need to be increased to allow for use of building wraps, flashing, sill panning, brackets, fasteners or other items. See pages 226-227 for more details.**
- Dimensions in parentheses are in millimeters.

Direct-Set Half Circle Window Area Specifications

Window Number	Glass Area Sq. Ft./(m²)
ATCTD20	0.75 (0.07)
ATCTD21	0.83 (0.08)
ATCTD24	1.15 (0.11)
ATCTD26	1.39 (0.13)
ATCTD27	1.50 (0.14)
ATCTD28	1.65 (0.15)
ATCTD29	1.77 (0.16)
ATCTD29**G**	1.80 (0.17)
ATCTD210	1.93 (0.18)
ATCTD30	2.23 (0.21)
ATCTD31	2.37 (0.22)
ATCTD32	2.55 (0.24)
ATCTD33	2.70 (0.25)
ATCTD33**G**	2.75 (0.26)
ATCTD34	2.90 (0.27)
ATCTD38	3.66 (0.34)
ATCTD39	3.89 (0.36)
ATCTD40	4.50 (0.42)
ATCTD43	5.22 (0.49)
ATCTD44	5.43 (0.50)
ATCTD48	6.45 (0.60)
ATCTD50	7.56 (0.70)
ATCTD54	8.75 (0.81)
ATCTD58	10.03 (0.93)
ATCTD60	11.40 (1.06)
ATCTD64	12.86 (1.19)
ATCTD68	14.40 (1.34)
ATCTD70	16.03 (1.49)

• Dimensions in parentheses are in square meters.

Direct-Set Elliptical Window Area Specifications

Window Number	Glass Area Sq. Ft./(m²)
ATETD40	1.69 (0.16)
ATETD44	2.01 (0.19)
ATETD48	2.57 (0.24)
ATETD50	2.86 (0.27)
ATETD54	3.41 (0.32)
ATETD58	3.98 (0.37)
ATETD60	4.27 (0.40)
ATETD64	4.82 (0.45)
ATETD68	5.60 (0.52)
ATETD70	6.26 (0.58)
ATETD74	6.62 (0.62)
ATETD711	7.92 (0.74)
ATETD80	8.00 (0.74)
ATETD811	10.13 (0.94)

• Dimensions in parentheses are in square meters.

Direct-Set Octagon Window Area Specifications

Window Number	Glass Area Sq. Ft./(m²)
ATOCD20	2.13 (0.20)
ATOCD24	3.11 (0.29)
ATOCD30	5.62 (0.52)
ATOCD40	10.76 (1.00)
ATOCD60	26.02 (2.42)

• Dimensions in parentheses are in square meters.

Direct-Set Circle & Oval Window Area Specifications

Window Number	Glass Area Sq. Ft./(m²)
ACRD20	2.02 (0.19)
ACRD24	2.95 (0.27)
ACRD30	5.33 (0.49)
ACRD40	10.20 (0.95)
ACRD60	24.67 (2.29)
AOVLD1824/**AOVLD**2418	1.93 (0.18)
AOVLD2030/**AOVLD**3020	3.27 (0.30)
AOVLD3048/**AOVLD**4830	8.71 (0.81)

• Dimensions in parentheses are in square meters.

Direct-Set Quarter Circle Window Area Specifications

Window Number	Glass Area Sq. Ft./(m²)
ATQCTD20	1.90 (0.18)
ATQCTD21	2.08 (0.19)
ATQCTD24	2.80 (0.26)
ATQCTD26	3.32 (0.31)
ATQCTD27	3.56 (0.33)
ATQCTD28	3.88 (0.36)
ATQCTD29	4.14 (0.38)
ATQCTD29**G**	4.22 (0.39)
ATQCTD210	4.49 (0.42)
ATQCTD30	5.13 (0.48)
ATQCTD31	5.43 (0.50)
ATQCTD32	5.83 (0.54)
ATQCTD33	6.14 (0.57)
ATQCTD33**G**	6.23 (0.58)
ATQCTD34	6.56 (0.61)
ATQCTD36	7.34 (0.68)
ATQCTD38	8.16 (0.76)
ATQCTD39	8.64 (0.80)
ATQCTD40	9.94 (0.92)
ATQCTD43	11.45 (1.06)
ATQCTD44	11.89 (1.10)
ATQCTD48	14.01 (1.30)
ATQCTD50	16.31 (1.52)
ATQCTD54	18.79 (1.75)
ATQCTD58	21.44 (1.99)
ATQCTD60	24.26 (2.25)
ATQCTD64	27.26 (2.53)
ATQCTD68	30.43 (2.83)
ATQCTD70	33.78 (3.14)

• Dimensions in parentheses are in square meters.

Direct-Set Unequal Leg Arch Window Area Specifications

Window Number	Glass Area Sq. Ft./(m²)
ATUD1418	1.11 (0.10)
ATUD14110	1.27 (0.12)
ATUD1420	1.42 (0.13)
ATUD1424	1.74 (0.16)
ATUD1428	2.05 (0.19)
ATUD1430	2.36 (0.22)
ATUD1818	1.46 (0.14)
ATUD18110	1.67 (0.16)
ATUD1820	1.89 (0.18)
ATUD1824	2.31 (0.21)
ATUD1828	2.73 (0.25)
ATUD1830	3.16 (0.29)
ATUD2018	1.79 (0.17)
ATUD20110	2.06 (0.19)
ATUD2020	2.32 (0.22)
ATUD2024	2.86 (0.27)
ATUD2028	3.39 (0.32)
ATUD2030	3.93 (0.36)
ATUD2118	1.91 (0.18)
ATUD2120	2.47 (0.23)
ATUD2124	3.03 (0.28)
ATUD2128	3.59 (0.33)
ATUD2130	4.15 (0.39)
ATUD2418	2.13 (0.20)
ATUD24110	2.45 (0.23)
ATUD2420	2.78 (0.26)
ATUD2424	3.42 (0.32)
ATUD2428	4.07 (0.38)
ATUD2430	4.71 (0.44)
ATUD2618	2.26 (0.21)
ATUD26110	2.61 (0.24)
ATUD2620	2.96 (0.27)
ATUD2624	3.66 (0.34)
ATUD2628	4.36 (0.41)
ATUD2630	5.06 (0.47)
ATUD2718	2.35 (0.22)
ATUD2720	3.08 (0.29)
ATUD2724	3.80 (0.35)
ATUD2728	4.53 (0.42)
ATUD2730	5.25 (0.49)
ATUD2818	2.42 (0.22)
ATUD28110	2.80 (0.26)
ATUD2820	3.18 (0.29)
ATUD2824	3.93 (0.37)
ATUD2828	4.69 (0.44)
ATUD2830	5.45 (0.51)
ATUD2918	2.47 (0.23)
ATUD2920	3.25 (0.30)
ATUD2924	4.03 (0.37)
ATUD2928	4.81 (0.45)
ATUD2930	5.59 (0.52)
ATUD2918**G**	2.48 (0.23)
ATUD2920**G**	3.27 (0.30)
ATUD2924**G**	4.06 (0.38)
ATUD2928**G**	4.84 (0.45)
ATUD2930**G**	5.63 (0.52)
ATUD21018	2.58 (0.24)
ATUD210110	2.98 (0.28)
ATUD21020	3.39 (0.31)
ATUD21024	4.20 (0.39)
ATUD21028	5.01 (0.47)
ATUD21030	5.83 (0.54)
ATUD3018	2.68 (0.25)
ATUD30110	3.11 (0.29)
ATUD3020	3.55 (0.33)
ATUD3024	4.42 (0.41)
ATUD3028	5.28 (0.49)
ATUD3030	6.15 (0.57)
ATUD3118	2.83 (0.26)
ATUD3120	3.72 (0.35)
ATUD3124	4.61 (0.43)
ATUD3128	5.50 (0.51)
ATUD3130	6.40 (0.59)
ATUD3218	2.88 (0.27)
ATUD32110	3.35 (0.31)
ATUD3220	3.81 (0.35)
ATUD3224	4.73 (0.44)
ATUD3228	5.66 (0.53)
ATUD3230	6.58 (0.61)
ATUD3318	2.93 (0.27)
ATUD3320	3.88 (0.36)
ATUD3324	4.82 (0.45)
ATUD3328	5.77 (0.54)
ATUD3330	6.72 (0.62)
ATUD3318**G**	2.94 (0.27)
ATUD3320**G**	3.89 (0.36)
ATUD3324**G**	4.85 (0.45)
ATUD3328**G**	5.80 (0.54)
ATUD3330**G**	6.76 (0.63)
ATUD3418	2.98 (0.28)
ATUD34110	3.47 (0.32)
ATUD3420	3.96 (0.37)
ATUD3424	4.94 (0.46)
ATUD3428	5.92 (0.55)
ATUD3430	6.90 (0.64)
ATUD3818	3.27 (0.30)
ATUD38110	3.81 (0.35)
ATUD3820	4.36 (0.40)
ATUD3824	5.45 (0.51)
ATUD3828	6.54 (0.61)
ATUAD3830	7.63 (0.71)
ATUAD3918	3.31 (0.31)
ATUAD3920	4.43 (0.41)
ATUAD3924	5.55 (0.52)
ATUAD3928	6.67 (0.62)
ATUAD3930	7.79 (0.72)
ATUAD40110	4.00 (0.37)
ATUAD4020	4.60 (0.43)
ATUAD4024	5.80 (0.54)
ATUAD4028	7.00 (0.65)
ATUAD4030	8.20 (0.76)
ATUAD4318	4.92 (0.46)
ATUAD4320	6.21 (0.58)
ATUAD4324	7.50 (0.70)
ATUAD4328	8.79 (0.82)
ATUAD44110	4.31 (0.40)
ATUAD4420	4.97 (0.46)
ATUAD4424	6.28 (0.58)
ATUAD4428	7.59 (0.71)

• Dimensions in parentheses are in square meters.

continued on next page

Direct-Set Unequal Leg Arch Window Area Specifications *(continued)*

Window Number	Glass Area Sq. Ft./(m²)
ATUAD4430	8.90 (0.83)
ATUAD48110	4.61 (0.43)
ATUAD4820	5.32 (0.49)
ATUAD4824	6.74 (0.63)
ATUAD4828	8.17 (0.76)
ATUAD4830	9.59 (0.89)
ATUAD5024	7.01 (0.65)
ATUAD5028	8.54 (0.79)
ATUAD5030	10.08 (0.94)
ATUAD5424	7.45 (0.69)
ATUAD5428	9.09 (0.84)
ATUAD5430	10.74 (1.00)
ATUAD5824	7.87 (0.73)
ATUAD5828	9.63 (0.89)
ATUAD5830	11.38 (1.06)
ATUAD6024	8.05 (0.75)
ATUAD6028	9.91 (0.92)
ATUAD6030	11.78 (1.09)

• Dimensions in parentheses are in square meters.

Sash-Set Unequal Leg Arch Window Area Specifications

Window Number	Glass Area Sq. Ft./(m²)
ATU1418	0.69 (0.06)
ATU14110	0.81 (0.08)
ATU1420	0.93 (0.09)
ATU1424	1.17 (0.11)
ATU1428	1.41 (0.13)
ATU1430	1.65 (0.15)
ATU1818	0.98 (0.09)
ATU18110	1.15 (0.11)
ATU1820	1.33 (0.12)
ATU1824	1.68 (0.16)
ATU1828	2.03 (0.19)
ATU1830	2.38 (0.22)
ATU2018	1.24 (0.12)
ATU20110	1.47 (0.14)
ATU2020	1.70 (0.16)
ATU2024	2.16 (0.20)

Window Number	Glass Area Sq. Ft./(m²)
ATU2028	2.62 (0.24)
ATU2030	3.08 (0.29)
ATU2118	1.34 (0.12)
ATU2120	1.83 (0.17)
ATU2124	2.31 (0.21)
ATU2128	2.80 (0.26)
ATU2130	3.28 (0.30)
ATU2418	1.51 (0.14)
ATU24110	1.80 (0.17)
ATU2420	2.09 (0.19)
ATU2424	2.66 (0.25)
ATU2428	3.23 (0.30)
ATU2430	3.80 (0.35)
ATU2618	1.61 (0.15)
ATU26110	1.92 (0.18)
ATU2620	2.24 (0.21)
ATU2624	2.86 (0.27)
ATU2628	3.49 (0.32)
ATU2630	4.12 (0.38)
ATU2718	1.69 (0.16)
ATU2720	2.34 (0.22)
ATU2724	2.99 (0.28)
ATU2728	3.64 (0.34)
ATU2730	4.30 (0.40)
ATU2818	1.74 (0.16)
ATU28110	2.08 (0.19)
ATU2820	2.42 (0.22)
ATU2824	3.10 (0.29)
ATU2828	3.79 (0.35)
ATU2830	4.47 (0.42)
ATU2918	1.77 (0.16)
ATU2920	2.48 (0.23)
ATU2924	3.19 (0.30)
ATU2928	3.89 (0.36)
ATU2930	4.60 (0.43)
ATU2918**G**	1.78 (0.17)
ATU2920**G**	2.50 (0.23)
ATU2924**G**	3.21 (0.30)
ATU2928**G**	3.92 (0.36)
ATU2930**G**	4.64 (0.43)
ATU21018	1.86 (0.17)

Window Number	Glass Area Sq. Ft./(m²)
ATU210110	2.23 (0.21)
ATU21020	2.60 (0.24)
ATU21024	3.34 (0.31)
ATU21028	4.08 (0.38)
ATU21030	4.82 (0.45)
ATU3018	1.93 (0.18)
ATU30110	2.33 (0.22)
ATU3020	2.73 (0.25)
ATU3024	3.52 (0.33)
ATU3028	4.32 (0.40)
ATU3030	5.11 (0.47)
ATU3118	2.06 (0.19)
ATU3120	2.88 (0.27)
ATU3124	3.70 (0.34)
ATU3128	4.51 (0.42)
ATU3130	5.33 (0.50)
ATU3218	2.10 (0.20)
ATU32110	2.53 (0.23)
ATU3220	2.95 (0.27)
ATU3224	3.80 (0.35)
ATU3228	4.65 (0.43)
ATU3230	5.50 (0.51)
ATU3318	2.13 (0.20)
ATU3320	3.00 (0.28)
ATU3324	3.88 (0.36)
ATU3328	4.75 (0.44)
ATU3330	5.63 (0.52)
ATU3318**G**	2.14 (0.20)
ATU3320**G**	3.02 (0.28)
ATU3324**G**	3.90 (0.36)
ATU3328**G**	4.78 (0.44)
ATU3330**G**	5.66 (0.53)
ATU3418	2.16 (0.20)
ATU34110	2.62 (0.24)
ATU3420	3.07 (0.29)
ATU3424	3.98 (0.37)
ATU3428	4.88 (0.45)
ATUA3430	5.79 (0.54)
ATUA3818	2.38 (0.22)
ATUA38110	2.89 (0.27)
ATUA3820	3.40 (0.32)

Window Number	Glass Area Sq. Ft./(m²)
ATUA3824	4.42 (0.41)
ATUA3828	5.43 (0.50)
ATUA3830	6.45 (0.60)
ATUA3918	2.41 (0.22)
ATUA3920	3.46 (0.32)
ATUA3924	4.50 (0.42)
ATUA3928	5.55 (0.52)
ATUA3930	6.60 (0.61)
ATUA40110	3.02 (0.28)
ATUA4020	3.58 (0.33)
ATUA4024	4.71 (0.44)
ATUA4028	5.84 (0.54)
ATUA4030	6.96 (0.65)
ATUA4318	3.85 (0.36)
ATUA4320	5.06 (0.47)
ATUA4324	6.28 (0.58)
ATUA4328	7.49 (0.70)
ATUA44110	3.26 (0.30)
ATUA4420	3.88 (0.36)
ATUA4424	5.12 (0.48)
ATUA4428	6.36 (0.59)
ATUA4430	7.60 (0.71)
ATUA48110	3.49 (0.32)
ATUA4820	4.17 (0.39)
ATUA4824	5.52 (0.51)
ATUA4828	6.87 (0.64)
ATUA4830	8.22 (0.76)
ATUA5024	5.72 (0.53)
ATUA5028	7.18 (0.67)
ATUA5030	8.64 (0.80)
ATUA5424	6.09 (0.57)
ATUA5428	7.66 (0.71)
ATUA5430	9.23 (0.86)
ATUA5824	6.45 (0.60)
ATUA5828	8.13 (0.76)
ATUA5830	9.81 (0.91)
ATUA6024	6.56 (0.61)
ATUA6028	8.36 (0.78)
ATUA6030	10.15 (0.94)

• Dimensions in parentheses are in square meters.

Sash-Set Half Circle Window Unobstructed Glass Dimensions and Area Specifications

Window Number	Unobstructed Glass Width Inches/(mm)	Unobstructed Glass Height Inches/(mm)	Glass Area Sq. Ft./(m²)
ATCT20	15 3/16" (386)	5" (126)	0.38 (0.04)
ATCT21	16 1/8" (410)	5 7/16" (137)	0.44 (0.04)
ATCT24	19 1/2" (495)	7" (177)	0.69 (0.06)
ATCT26	21 9/16" (548)	8" (202)	0.88 (0.08)
ATCT27	22 1/2" (572)	8 7/16" (214)	0.97 (0.09)
ATCT28	23 11/16" (601)	9" (228)	1.09 (0.10)
ATCT29	24 9/16" (624)	9 7/16" (239)	1.19 (0.11)
ATCT29**G**	24 13/16" (631)	9 9/16" (242)	1.22 (0.11)
ATCT210	25 1/8" (654)	10" (253)	1.32 (0.12)
ATCT30	27 13/16" (706)	11" (279)	1.57 (0.15)
ATCT31	28 11/16" (729)	11 7/16" (290)	1.69 (0.16)
ATCT32	29 7/8" (758)	12" (304)	1.85 (0.17)
ATCT33	30 3/4" (781)	12 7/16" (315)	1.98 (0.18)
ATCT33**G**	31" (788)	12 9/16" (318)	2.02 (0.19)

Window Number	Unobstructed Glass Width Inches/(mm)	Unobstructed Glass Height Inches/(mm)	Glass Area Sq. Ft./(m²)
ATCT34	31 15/16" (810)	13" (329)	2.15 (0.20)
ATCT38	36" (914)	15" (380)	2.81 (0.26)
ATCT39	37 1/8" (943)	15 9/16" (395)	3.01 (0.28)
ATCT40	40 1/16" (1017)	17" (431)	3.56 (0.33)
ATCT43	43 3/16" (1098)	18 9/16" (471)	4.21 (0.39)
ATCT44	44 1/8" (1120)	19" (482)	4.40 (0.41)
ATCT48	48 1/8" (1223)	21" (533)	5.32 (0.49)
ATCT50	52 3/16" (1325)	23" (583)	6.33 (0.59)
ATCT54	56 3/16" (1428)	25" (634)	7.43 (0.69)
ATCT58	60 1/4" (1530)	27" (685)	8.62 (0.80)
ATCT60	64 1/4" (1632)	29" (736)	9.89 (0.92)
ATCT64	68 1/4" (1734)	31" (787)	11.25 (1.04)
ATCT68	72 5/16" (1836)	33" (837)	12.70 (1.18)
ATCT70	76 5/16" (1938)	35" (888)	14.23 (1.32)

• Dimensions in parentheses are in millimeters or square meters.

Sash-Set Elliptical Window Unobstructed Glass Dimensions and Area Specifications

Window Number	Unobstructed Glass Width Inches/(mm)	Unobstructed Glass Height Inches/(mm)	Glass Area Sq. Ft./(m²)
ATET40	36 1/2" (927)	5 1/4" (133)	0.94 (0.09)
ATET44	40 3/4" (1035)	6" (152)	1.18 (0.11)
ATET48	46 7/16" (1179)	6 5/8" (167)	1.63 (0.15)
ATET50	50 5/8" (1286)	7 3/8" (187)	1.84 (0.17)
ATET54	55 1/2" (1410)	8 1/8" (206)	2.30 (0.21)
ATET58	60 1/16" (1525)	8 7/8" (225)	2.78 (0.26)
ATET60	63" (1601)	9 1/2" (241)	3.01 (0.28)
ATET64	67 1/8" (1705)	10 1/4" (260)	3.48 (0.32)
ATET68	71 7/8" (1826)	11" (279)	4.17 (0.39)
ATET70	76 1/8" (1934)	11 3/4" (298)	4.74 (0.44)
ATET74	79 3/8" (2016)	12 3/8" (314)	5.05 (0.47)
ATET711	86 11/16" (2201)	13 3/4" (348)	6.20 (0.58)
ATET80	87 1/2" (2222)	13 7/8" (352)	6.27 (0.58)
ATET811	98 13/16" (2509)	15 7/8" (402)	8.18 (0.76)

• Dimensions in parentheses are in millimeters or square meters.

Sash-Set Quarter Circle Window Unobstructed Glass Dimensions and Area Specifications

Window Number	Unobstructed Glass Width Inches/mm	Unobstructed Glass Height Inches/mm	Glass Area Sq. Ft./(m²)
ATQCT20	16 5/16" (414)	16 5/16" (414)	1.33 (0.12)
ATQCT21	17 3/16" (437)	17 3/16" (437)	1.48 (0.14)
ATQCT24	20 3/8" (517)	20 3/8" (517)	2.10 (0.19)
ATQCT26	22 3/8" (568)	22 3/8" (568)	2.55 (0.24)
ATQCT27	23 1/4" (591)	23 1/4" (591)	2.76 (0.26)
ATQCT28	24 3/8" (620)	24 3/8" (620)	3.04 (0.28)
ATQCT29	25 1/4" (642)	25 1/4" (642)	3.27 (0.30)
ATQCT29**G**	25 1/2" (648)	25 1/2" (648)	3.34 (0.31)
ATQCT210	26 7/16" (671)	26 7/16" (671)	3.58 (0.33)
ATQCT30	28 7/16" (722)	28 7/16" (722)	4.16 (0.39)
ATQCT31	29 5/16" (744)	29 5/16" (744)	4.43 (0.41)
ATQCT32	30 7/16" (773)	30 7/16" (773)	4.79 (0.44)
ATQCT33	31 5/16" (795)	31 5/16" (795)	5.08 (0.47)
ATQCT33**G**	31 9/16" (802)	31 9/16" (802)	5.16 (0.48)
ATQCT34	32 7/16" (824)	32 7/16" (824)	5.46 (0.51)
ATQCT36	34 7/16" (875)	34 7/16" (875)	6.17 (0.57)
ATQCT38	36 7/16" (926)	36 7/16" (926)	6.93 (0.64)
ATQCT39	37 9/16" (955)	37 9/16" (955)	7.37 (0.68)
ATQCT40	40 7/16" (1028)	40 7/16" (1028)	8.57 (0.80)
ATQCT43	43 5/8" (1107)	43 5/8" (1107)	9.98 (0.93)
ATQCT44	44 1/2" (1130)	44 1/2" (1130)	10.39 (0.97)
ATQCT48	48 1/2" (1232)	48 1/2" (1232)	12.38 (1.15)
ATQCT50	52 1/2" (1333)	52 1/2" (1333)	14.55 (1.35)
ATQCT54	56 1/2" (1435)	56 1/2" (1435)	16.89 (1.57)
ATQCT58	60 1/2" (1537)	60 1/2" (1537)	19.41 (1.80)
ATQCT60	64 1/2" (1639)	64 1/2" (1639)	22.10 (2.05)
ATQCT64	68 1/2" (1740)	68 1/2" (1740)	24.97 (2.32)
ATQCT68	72 1/2" (1842)	72 1/2" (1842)	28.01 (2.60)
ATQCT70	76 1/2" (1944)	76 1/2" (1944)	31.22 (2.90)

• Dimensions in parentheses are in millimeters or square meters.

Sash-Set Octagon & Circle Window Unobstructed Glass Dimensions and Area Specifications

Window Number	Unobstructed Glass Width Inches/(mm)	Unobstructed Glass Height Inches/(mm)	Glass Area Sq. Ft./(m²)
ATOC20	16 5/8" (421)	16 5/8" (421)	1.58 (0.15)
ATOC24	20 5/8" (523)	20 5/8" (523)	2.44 (0.23)
ATOC30	28 5/8" (726)	28 5/8" (726)	4.70 (0.44)
ATOC40	40 5/8" (1031)	40 5/8" (1031)	9.48 (0.88)
ATOC60	64 5/8" (1641)	64 5/8" (1641)	24.00 (2.23)
ACR20	16 5/8" (421)	16 5/8" (421)	1.50 (0.14)
ACR24	20 5/8" (523)	20 5/8" (523)	2.31 (0.21)
ACR30	28 5/8" (726)	28 5/8" (726)	4.46 (0.41)
ACR40	40 5/8" (1031)	40 5/8" (1031)	8.99 (0.83)
ACR60	64 5/8" (1641)	64 5/8" (1641)	22.76 (2.11)

• Dimensions in parentheses are in millimeters or square meters.

Custom-Sized Trapezoid Windows

Trapezoid windows are available in custom sizes in 1/8" (3) increments.

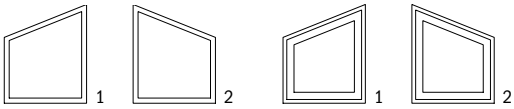

Direct-Set Trapezoid Sash-Set Trapezoid

Available direct-set or sash-set. Choose left facing (1) or right facing (2) as viewed from the exterior. Available with PG upgrade.

Design Criteria

Listed below are some factors that must be considered when deciding on a custom-size trapezoid window.

Minimum and Maximum Limits

Trapezoid windows may be assembled in custom sizes with these limitations:

- **MAXIMUM FRAME AREA: 65 sq. ft. or 6.04 m² for Low-E4® tempered glass**
- **Square footage is based on a square or rectangular shape**
- **For direct-set windows, no side may be less than 6" (152) and is dependent on slope**
- **For sash-set windows, no side may be less than 8 1/2" (216) and is dependent on slope**
- **Minimum cut angle is 12°**

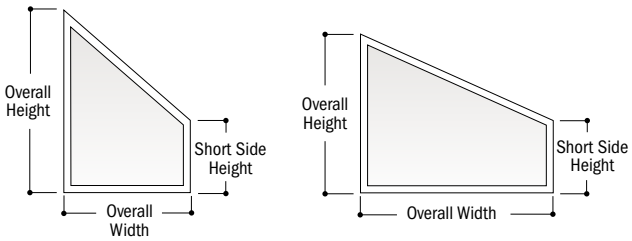

Specify overall width at sill, overall height, and short side height. Slope is often designed to match a roof's pitch. Contact your Andersen supplier for more information.

Details shown on page 111.

Grille patterns are available in custom patterns. For more grille options, see page 19 or visit **andersenwindows.com/grilles**.

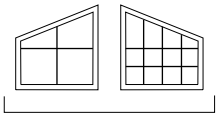

Custom Examples

Table of Direct-Set Arch Window Sizes

Scale 1/8" (3) = 1'-0" (305) — 1:96

Notes on page 85 also apply to this page.

Window Dimension	1'-11 1/4" (591)	2'-0 1/8" (613)	2'-3 1/4" (692)	2'-5 1/4" (743)	2'-6 1/8" (765)	2'-7 1/4" (794)	2'-8 1/8" (816)	2'-8 3/8" (822)	2'-9 1/4" (845)
Minimum Rough Opening	2'-0" (610)	2'-1" (635)	2'-4" (711)	2'-6" (762)	2'-7" (787)	2'-8" (813)	2'-9" (838)	2'-9" (838)	2'-10" (864)
Unobstructed Glass	19 1/4" (489)	20 1/8" (511)	23 1/4" (591)	25 1/4" (641)	26 1/8" (664)	27 1/4" (692)	28 1/8" (714)	28 3/8" (721)	29 1/4" (743)

CUSTOM SIZES AVAILABLE

Window height shown in table

Minimum Rough Opening = window height + 3/4" (19)

Unobstructed Glass = window height – 4" (102)

CUSTOM SIZES AVAILABLE

Radius	24"(610)	30"(762)	30"(762)	30"(762)	36"(914)	36"(914)	36"(914)	36"(914)	36"(914)
Chord Height	3" (76)	2 17/32" (64)	3 9/32" (83)	3 13/16" (97)	3 5/16" (84)	3 9/16" (91)	3 25/32" (96)	3 27/32" (98)	4 1/16" (103)
Shoulder Height 11 1/4" (286)	1'-2 1/4" (362) **ATAD2010**	1'-1 25/32" (350) **ATAD2110**	1'-2 17/32" (369) **ATAD2410**	1'-3 1/16" (382) **ATAD2610**	1'-2 9/16" (370) **ATAD2710**	1'-2 13/16" (376) **ATAD2810**	1'-3 1/32" (382) **ATAD2910**	1'-3 3/32" (383) **ATAD2910G***	1'-3 5/16" (389) **ATAD21010**
23 1/4" (591)	2'-2 1/4" (667) **ATAD2020**	2'-1 25/32" (655) **ATAD2120**	2'-2 17/32" (674) **ATAD2420**	2'-3 1/16" (687) **ATAD2620**	2'-2 9/16" (674) **ATAD2720**	2'-2 13/16" (681) **ATAD2820**	2'-3 1/32" (687) **ATAD2920**	2'-3 3/32" (688) **ATAD2920G***	2'-3 5/16" (694) **ATAD21020**
27 1/4" (692)	2'-6 1/4" (768) **ATAD2024**	2'-5 25/32" (756) **ATAD2124**	2'-6 17/32" (775) **ATAD2424**	2'-7 1/16" (789) **ATAD2624**	2'-6 9/16" (776) **ATAD2724**	2'-6 13/16" (783) **ATAD2824**	2'-7 1/32" (788) **ATAD2924**	2'-7 3/32" (790) **ATAD2924G***	2'-7 5/16" (795) **ATAD21024**
31 1/4" (794)	2'-10 1/4" (870) **ATAD2028**	2'-9 25/32" (858) **ATAD2128**	2'-10 17/32" (877) **ATAD2428**	2'-11 1/16" (890) **ATAD2628**	2'-10 9/16" (878) **ATAD2728**	2'-10 13/16" (884) **ATAD2828**	2'-11 1/32" (890) **ATAD2928**	2'-11 3/32" (891) **ATAD2928G***	2'-11 5/16" (897) **ATAD21028**
35 1/4" (895)	3'-2 1/4" (972) **ATAD2030**	3'-1 25/32" (960) **ATAD2130**	3'-2 17/32" (978) **ATAD2430**	3'-3 1/16" (992) **ATAD2630**	3'-2 9/16" (979) **ATAD2730**	3'-2 13/16" (986) **ATAD2830**	3'-3 1/32" (991) **ATAD2930**	3'-3 3/32" (993) **ATAD2930G***	3'-3 5/16" (999) **ATAD21030**
39 1/4" (997)	3'-6 1/4" (1073) **ATAD2034**		3'-6 17/32" (1080) **ATAD2434**	3'-7 1/16" (1094) **ATAD2634**		3'-6 13/16" (1088) **ATAD2834**			3'-7 5/16" (1100) **ATAD21034**
43 1/4" (1099)	3'-10 1/4" (1175) **ATAD2038**		3'-10 17/32" (1182) **ATAD2438**	3'-11 1/16" (1195) **ATAD2638**		3'-10 13/16" (1189) **ATAD2838**			3'-11 5/16" (1202) **ATAD21038**
47 1/4" (1200)	4'-2 1/4" (1276) **ATAD2040**		4'-2 17/32" (1283) **ATAD2440**	4'-3 1/16" (1297) **ATAD2640**		4'-2 13/16" (1291) **ATAD2840**			4'-3 5/16" (1303) **ATAD21040**
51 1/4" (1302)	4'-6 1/4" (1378) **ATAD2044**		4'-6 17/32" (1385) **ATAD2444**	4'-7 1/16" (1398) **ATAD2644**		4'-6 13/16" (1392) **ATAD2844**			4'-7 5/16" (1405) **ATAD21044**
55 1/4" (1403)	4'-10 1/4" (1480) **ATAD2048**		4'-10 17/32" (1486) **ATAD2448**	4'-11 1/16" (1500) **ATAD2648**		4'-10 13/16" (1494) **ATAD2848**			4'-11 5/16" (1507) **ATAD21048**

- "Window Dimension" always refers to outside frame-to-frame dimension.
- "**Minimum Rough Opening**" **dimensions may need to be increased to allow for use of building wraps, flashing, sill panning, brackets, fasteners or other items. See pages 226-227 for more details.**
- Dimensions in parentheses are in millimeters.

*Sized to fit over a stationary A-Series gliding patio door.

Notes on page 85 also apply to this page.

2'-11 1/4" (895)	3'-0 1/8" (918)	3'-1 1/4" (946)	3'-2 1/8" (968)	3'-2 3/8" (975)	3'-3 1/4" (997)	3'-7 1/4" (1099)	3'-8 3/8" (1127)	3'-11 1/4" (1200)	4'-2 3/8" (1280)
3'-0" (914)	3'-1" (940)	3'-2" (965)	3'-3" (991)	3'-3" (991)	3'-4" (1016)	3'-8" (1118)	3'-9" (1143)	4'-0" (1219)	4'-3" (1295)
31 1/4" (794)	32 1/8" (816)	33 1/4" (845)	34 1/8" (867)	34 3/8" (873)	35 1/4" (895)	39 1/4" (997)	40 3/8" (1026)	43 1/4" (1099)	46 3/8" (1178)

36" (914)	36" (914)	42" (1067)	42" (1067)	42" (1067)	42" (1067)	48" (1219)	48" (1219)	48" (1219)	60" (1524)
4 5/8" (117)	4 27/32" (123)	4 11/32" (111)	4 9/16" (116)	4 5/8" (118)	4 7/8" (124)	5 5/32" (131)	5 7/16" (138)	6 7/32" (158)	5 17/32" (141)
1'-3 7/8" (403) ATAD3010	1'-4 3/32" (409) ATAD3110	1'-3 19/32" (396) ATAD3210	1'-3 13/16" (402) ATAD3310	1'-3 7/8" (404) ATAD3310G*	1'-4 1/8" (409) ATAD3410	1'-4 13/32" (416) ATAD3810	1'-4 11/16" (424) ATAD3910	1'-5 15/32" (444) ATAD4010	1'-4 25/32" (427) ATAD4310
2'-3 7/8" (708) ATAD3020	2'-4 3/32" (714) ATAD3120	2'-3 19/32" (701) ATAD3220	2'-3 13/16" (707) ATAD3320	2'-3 7/8" (708) ATAD3320G*	2'-4 1/8" (714) ATAD3420	2'-4 13/32" (721) ATAD3820	2'-4 11/16" (729) ATAD3920	2'-5 15/32" (748) ATAD4020	2'-4 25/32" (731) ATAD4320
2'-7 7/8" (809) ATAD3024	2'-8 3/32" (816) ATAD3124	2'-7 19/32" (803) ATAD3224	2'-7 13/16" (808) ATAD3324	2'-7 7/8" (810) ATAD3324G*	2'-8 1/8" (816) ATAD3424	2'-8 13/32" (823) ATAD3824	2'-8 11/16" (830) ATAD3924	2'-9 15/32" (850) ATAD4024	2'-8 25/32" (833) ATAD4324
2'-11 7/8" (911) ATAD3028	3'-0 3/32" (917) ATAD3128	2'-11 19/32" (904) ATAD3228	2'-11 13/16" (910) ATAD3328	2'-11 7/8" (912) ATAD3328G*	3'-0 1/8" (917) ATAD3428	3'-0 13/32" (924) ATAD3828	3'-0 11/16" (932) ATAD3928	3'-1 15/32" (952) ATAD4028	3'-0 25/32" (935) ATAD4328
3'-3 7/8" (1012) ATAD3030	3'-4 3/32" (1019) ATAD3130	3'-3 19/32" (1006) ATAD3230	3'-3 13/16" (1012) ATAD3330	3'-3 7/8" (1013) ATAD3330G*	3'-4 1/8" (1019) ATAD3430	3'-4 13/32" (1026) ATAD3830	3'-4 11/16" (1033) ATAD3930	3'-5 15/32" (1053) ATAD4030	3'-4 25/32" (1036) ATAD4330
3'-7 7/8" (1114) ATAD3034		3'-7 19/32" (1108) ATAD3234			3'-8 1/8" (1121) ATAD3434	3'-8 13/32" (1128) ATAD3834		3'-9 15/32" (1155) ATAD4034	
3'-11 7/8" (1216) ATAD3038		3'-11 19/32" (1209) ATAD3238			4'-0 1/8" (1222) ATAD3438	4'-0 13/32" (1229) ATAD3838		4'-1 15/32" (1256) ATAD4038	
4'-3 7/8" (1317) ATAD3040		4'-3 19/32" (1311) ATAD3240			4'-4 1/8" (1324) ATAD3440	4'-4 13/32" (1331) ATAD3840		4'-5 15/32" (1358) ATAD4040	
4'-7 7/8" (1419) ATAD3044		4'-7 19/32" (1412) ATAD3244			4'-8 1/8" (1425) ATAD3444	4'-8 13/32" (1432) ATAD3844		4'-9 15/32" (1460) ATAD4044	
4'-11 7/8" (1520) ATAD3048		4'-11 19/32" (1514) ATAD3248			5'-0 1/8" (1527) ATAD3448	5'-0 13/32" (1534) ATAD3848		5'-1 15/32" (1561) ATAD4048	

continued on next page

- "Window Dimension" always refers to outside frame-to-frame dimension.
- "**Minimum Rough Opening**" **dimensions may need to be increased to allow for use of building wraps, flashing, sill panning, brackets, fasteners or other items. See pages 226-227 for more details.**
- Dimensions in parentheses are in millimeters.
- *Sized to fit over a stationary A-Series gliding patio door.

Table of Direct-Set Arch Window Sizes *(continued)*

Scale 1/8" (3) = 1'-0" (305) — 1:96

Notes on page 85 also apply to this page.

Window Dimension	1'-11 1/4" (591)	2'-0 1/8" (613)	2'-3 1/4" (692)	2'-5 1/4" (743)	2'-6 1/8" (765)	2'-7 1/4" (794)	2'-8 1/8" (816)	2'-8 3/8" (822)	2'-9 1/4" (845)
Minimum Rough Opening	2'-0" (610)	2'-1" (635)	2'-4" (711)	2'-6" (762)	2'-7" (787)	2'-8" (813)	2'-9" (838)	2'-9" (838)	2'-10" (864)
Unobstructed Glass	19 1/4" (489)	20 1/8" (511)	23 1/4" (591)	25 1/4" (641)	26 1/8" (664)	27 1/4" (692)	28 1/8" (714)	28 3/8" (721)	29 1/4" (743)

CUSTOM SIZES AVAILABLE

Window height shown in table

Minimum Rough Opening = window height + 3/4" (19)

Unobstructed Glass = window height – 4" (102)

CUSTOM SIZES AVAILABLE

Radius	24"(610)	30"(762)	30"(762)	30"(762)	36"(914)	36"(914)	36"(914)	36"(914)	36"(914)
Chord Height	3" (76)	2 17/32" (64)	3 9/32" (83)	3 13/16" (97)	3 5/16" (84)	3 9/16" (91)	3 25/32" (96)	3 27/32" (98)	4 1/16" (103)
Shoulder Height 59 1/4" (1505)	5'-2 1/4" (1581) **ATAD**2050	5'-2 17/32" (1588) **ATAD**2450	5'-3 1/16" (1602) **ATAD**2650		5'-2 13/16" (1596) **ATAD**2850				5'-3 5/16" (1608) **ATAD**21050
63 1/4" (1607)	5'-6 1/4" (1683) **ATAD**2054	5'-6 17/32" (1690) **ATAD**2454	5'-7 1/16" (1703) **ATAD**2654		5'-6 13/16" (1697) **ATAD**2854				5'-7 5/16" (1710) **ATAD**21054
67 1/4" (1708)	5'-10 1/4" (1784) **ATAD**2058	5'-10 17/32" (1791) **ATAD**2458	5'-11 1/16" (1805) **ATAD**2658		5'-10 13/16" (1799) **ATAD**2858				5'-11 5/16" (1811) **ATAD**21058
71 1/4" (1810)	6'-2 1/4" (1886) **ATAD**2060	6'-2 17/32" (1893) **ATAD**2460	6'-3 1/16" (1906) **ATAD**2660		6'-2 13/16" (1900) **ATAD**2860				6'-3 5/16" (1913) **ATAD**21060
75 1/4" (1911)	6'-6 1/4" (1988) **ATAD**2064	6'-6 17/32" (1994) **ATAD**2464	6'-7 1/16" (2008) **ATAD**2664		6'-6 13/16" (2002) **ATAD**2864				6'-7 5/16" (2015) **ATAD**21064
79 1/4" (2013)	6'-10 1/4" (2089) **ATAD**2068	6'-10 17/32" (2096) **ATAD**2468	6'-11 1/16" (2110) **ATAD**2668		6'-10 13/16" (2104) **ATAD**2868				6'-11 5/16" (2116) **ATAD**21068
87 1/4" (2216)	7'-6 1/4" (2292) **ATAD**2074	7'-6 17/32" (2299) **ATAD**2474	7'-7 1/16" (2313) **ATAD**2674		7'-6 13/16" (2307) **ATAD**2874				7'-7 5/16" (2319) **ATAD**21074

- "Window Dimension" always refers to outside frame-to-frame dimension.
- "**Minimum Rough Opening**" **dimensions may need to be increased to allow for use of building wraps, flashing, sill panning, brackets, fasteners or other items. See pages 226-227 for more details.**
- Dimensions in parentheses are in millimeters.

Notes on page 85 also apply to this page.

2'-11 1/4" (895)	3'-0 1/8" (918)	3'-1 1/4" (946)	3'-2 1/8" (968)	3'-2 3/8" (975)	3'-3 1/4" (997)	3'-7 1/4" (1099)	3'-8 3/8" (1127)	3'-11 1/4" (1200)	4'-2 3/8" (1280)
3'-0" (914)	3'-1" (940)	3'-2" (965)	3'-3" (991)	3'-3" (991)	3'-4" (1016)	3'-8" (1118)	3'-9" (1143)	4'-0" (1219)	4'-3" (1295)
31 1/4" (794)	32 1/8" (816)	33 1/4" (845)	34 1/8" (867)	34 3/8" (873)	35 1/4" (895)	39 1/4" (997)	40 3/8" (1026)	43 1/4" (1099)	46 3/8" (1178)

36" (914)	36" (914)	42" (1067)	42" (1067)	42" (1067)	42" (1067)	48" (1219)	48" (1219)	48" (1219)	60" (1524)
4 5/8" (117)	4 27/32" (123)	4 11/32" (111)	4 9/16" (116)	4 5/8" (118)	4 7/8" (124)	5 5/32" (131)	5 7/16" (138)	6 7/32" (158)	5 17/32" (141)

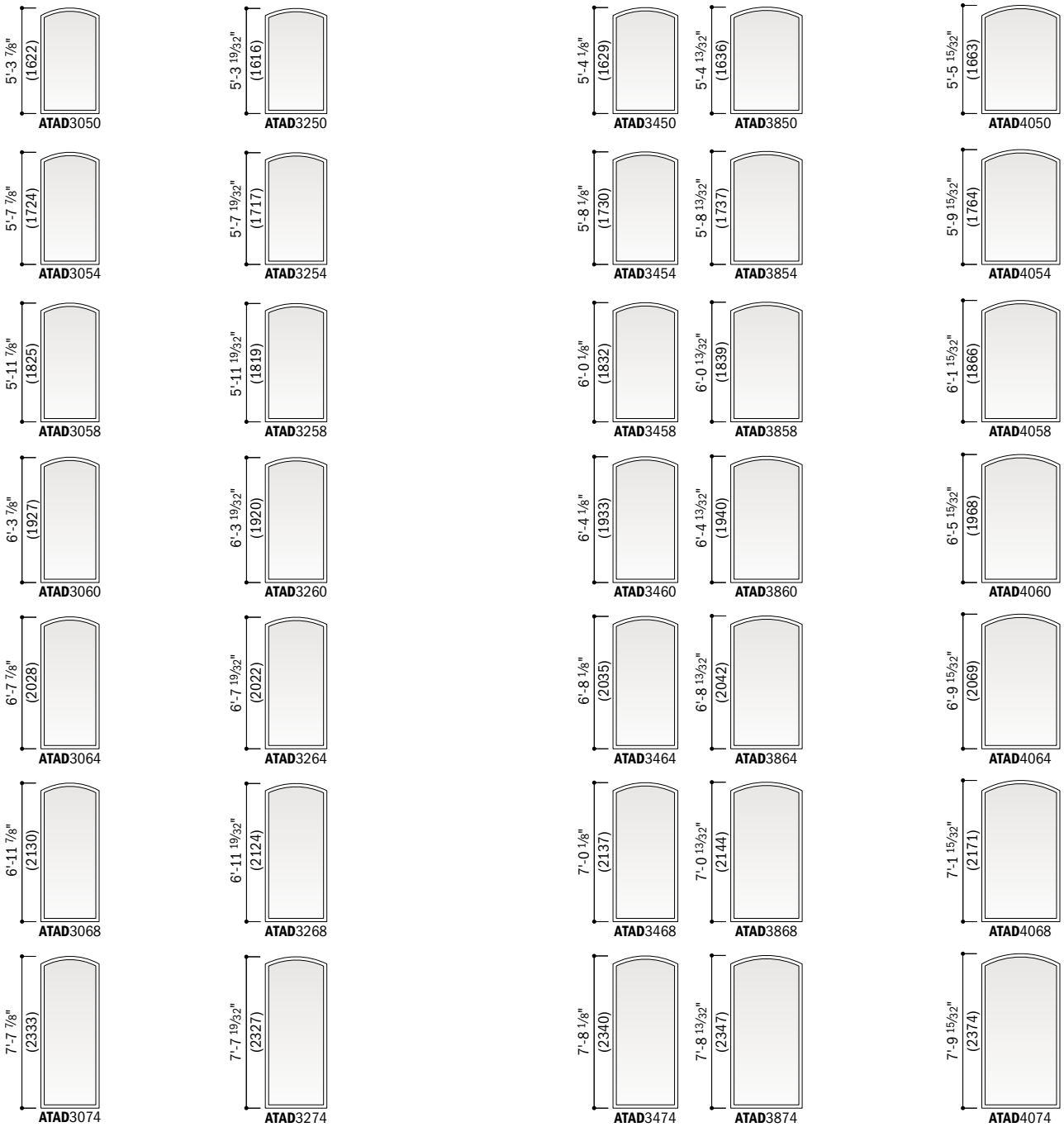

continued on next page

- "Window Dimension" always refers to outside frame-to-frame dimension.
- "**Minimum Rough Opening**" **dimensions may need to be increased to allow for use of building wraps, flashing, sill panning, brackets, fasteners or other items. See pages 226-227 for more details.**
- Dimensions in parentheses are in millimeters.

Table of Direct-Set Arch Window Sizes *(continued)*

Notes on page 85 also apply to this page.

Scale 1/8" (3) = 1'-0" (305) — 1:96

Window Dimension	1'-11 1/4" (591)	2'-0 1/8" (613)	2'-3 1/4" (692)	2'-5 1/4" (743)	2'-6 1/8" (765)	2'-7 1/4" (794)	2'-8 1/8" (816)	2'-8 3/8" (822)	2'-9 1/4" (845)
Minimum Rough Opening	2'-0" (610)	2'-1" (635)	2'-4" (711)	2'-6" (762)	2'-7" (787)	2'-8" (813)	2'-9" (838)	2'-9" (838)	2'-10" (864)
Unobstructed Glass	19 1/4" (489)	20 1/8" (511)	23 1/4" (591)	25 1/4" (641)	26 1/8" (664)	27 1/4" (692)	28 1/8" (714)	28 3/8" (721)	29 1/4" (743)

CUSTOM SIZES AVAILABLE

Window height shown in table

Radius	24"(610)	30"(762)	30"(762)	30"(762)	36"(914)	36"(914)	36"(914)	36"(914)	36"(914)
Chord Height	3" (76)	2 17/32" (64)	3 9/32" (83)	3 13/16" (97)	3 5/16" (84)	3 9/16" (91)	3 25/32" (96)	3 27/32" (98)	4 1/16" (103)

Minimum Rough Opening = window height + 3/4" (19)

Unobstructed Glass = window height – 4" (102)

CUSTOM SIZES AVAILABLE

Shoulder Height

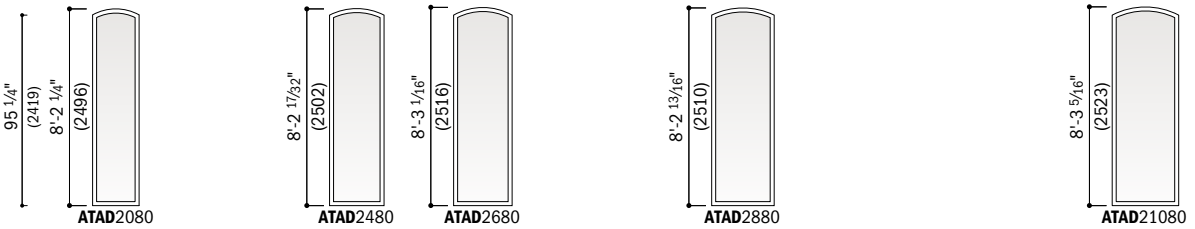

Direct-Set Arch Window Area Specifications

Window Number	Glass Area Sq. Ft./(m²)
ATAD2010	1.27 (0.12)
ATAD2020	2.88 (0.27)
ATAD2024	3.41 (0.32)
ATAD2028	3.95 (0.37)
ATAD2030	4.48 (0.42)
ATAD2034	5.02 (0.47)
ATAD2038	5.55 (0.52)
ATAD2040	6.09 (0.57)
ATAD2044	6.62 (0.62)
ATAD2048	7.16 (0.66)
ATAD2050	7.69 (0.71)
ATAD2054	8.23 (0.76)
ATAD2058	8.76 (0.81)
ATAD2060	9.29 (0.86)
ATAD2064	9.83 (0.91)
ATAD2068	10.36 (0.96)
ATAD2074	11.43 (1.06)
ATAD2080	12.50 (1.16)
ATAD2110	1.28 (0.12)
ATAD2120	2.96 (0.27)
ATAD2124	3.52 (0.33)
ATAD2128	4.08 (0.38)
ATAD2130	4.64 (0.43)
ATAD2410	1.57 (0.15)
ATAD2420	3.50 (0.33)
ATAD2424	4.15 (0.39)
ATAD2428	4.79 (0.45)
ATAD2430	5.44 (0.51)
ATAD2434	6.09 (0.57)
ATAD2438	6.73 (0.63)
ATAD2440	7.38 (0.69)
ATAD2444	8.02 (0.75)
ATAD2448	8.67 (0.81)
ATAD2450	9.32 (0.87)
ATAD2454	9.96 (0.93)
ATAD2458	10.61 (0.99)
ATAD2460	11.25 (1.05)

Window Number	Glass Area Sq. Ft./(m²)
ATAD2464	11.90 (1.11)
ATAD2468	12.54 (1.17)
ATAD2474	13.84 (1.29)
ATAD2480	15.13 (1.41)
ATAD2610	1.77 (0.16)
ATAD2620	3.87 (0.36)
ATAD2624	4.57 (0.42)
ATAD2628	5.27 (0.49)
ATAD2630	5.98 (0.56)
ATAD2634	6.68 (0.62)
ATAD2638	7.38 (0.69)
ATAD2640	8.08 (0.75)
ATAD2644	8.78 (0.82)
ATAD2648	9.48 (0.88)
ATAD2650	10.18 (0.95)
ATAD2654	10.88 (1.01)
ATAD2658	11.59 (1.08)
ATAD2660	12.29 (1.14)
ATAD2664	12.99 (1.21)
ATAD2668	13.69 (1.27)
ATAD2674	15.09 (1.40)
ATAD2680	16.50 (1.53)
ATAD2710	1.76 (0.16)
ATAD2720	3.94 (0.37)
ATAD2724	4.66 (0.43)
ATAD2728	5.39 (0.50)
ATAD2730	6.11 (0.57)
ATAD2810	1.87 (0.17)
ATAD2820	4.14 (0.38)
ATAD2824	4.90 (0.46)
ATAD2828	5.66 (0.53)
ATAD2830	6.41 (0.60)
ATAD2834	7.17 (0.67)
ATAD2838	7.93 (0.74)
ATAD2840	8.68 (0.81)
ATAD2844	9.44 (0.88)
ATAD2848	10.20 (0.95)

Window Number	Glass Area Sq. Ft./(m²)
ATAD2850	10.95 (1.02)
ATAD2854	11.71 (1.09)
ATAD2858	12.47 (1.16)
ATAD2860	13.22 (1.23)
ATAD2864	13.98 (1.30)
ATAD2868	14.74 (1.37)
ATAD2874	16.25 (1.51)
ATAD2880	17.77 (1.65)
ATAD2910	1.96 (0.18)
ATAD2920	4.30 (0.40)
ATAD2924	5.09 (0.47)
ATAD2928	5.87 (0.54)
ATAD2930	6.65 (0.62)
ATAD2910G	1.99 (0.18)
ATAD2920G	4.35 (0.40)
ATAD2924G	5.14 (0.48)
ATAD2928G	5.93 (0.55)
ATAD2930G	6.72 (0.62)
ATAD21010	2.08 (0.19)
ATAD21020	4.52 (0.42)
ATAD21024	5.33 (0.50)
ATAD21028	6.14 (0.57)
ATAD21030	6.95 (0.65)
ATAD21034	7.77 (0.72)
ATAD21038	8.58 (0.80)
ATAD21040	9.39 (0.87)
ATAD21044	10.20 (0.95)
ATAD21048	11.02 (1.02)
ATAD21050	11.83 (1.10)
ATAD21054	12.64 (1.17)
ATAD21058	13.45 (1.25)
ATAD21060	14.27 (1.33)
ATAD21064	15.08 (1.40)
ATAD21068	15.89 (1.48)
ATAD21074	17.52 (1.63)
ATAD21080	19.14 (1.78)
ATAD3010	2.31 (0.21)

Window Number	Glass Area Sq. Ft./(m²)
ATAD3020	4.91 (0.46)
ATAD3024	5.78 (0.54)
ATAD3028	6.65 (0.62)
ATAD3030	7.51 (0.70)
ATAD3034	8.38 (0.78)
ATAD3038	9.25 (0.86)
ATAD3040	10.12 (0.94)
ATAD3044	10.99 (1.02)
ATAD3048	11.85 (1.10)
ATAD3050	12.72 (1.18)
ATAD3054	13.59 (1.26)
ATAD3058	14.46 (1.34)
ATAD3060	15.33 (1.42)
ATAD3064	16.19 (1.50)
ATAD3068	17.06 (1.59)
ATAD3074	18.80 (1.75)
ATAD3080	20.53 (1.91)
ATAD3110	2.41 (0.22)
ATAD3120	5.09 (0.47)
ATAD3124	5.98 (0.56)
ATAD3128	6.87 (0.64)
ATAD3130	7.76 (0.72)
ATAD3210	2.41 (0.22)
ATAD3220	5.18 (0.48)
ATAD3224	6.10 (0.57)
ATAD3228	7.02 (0.65)
ATAD3230	7.95 (0.74)
ATAD3234	8.87 (0.82)
ATAD3238	9.80 (0.91)
ATAD3240	10.72 (1.00)
ATAD3244	11.64 (1.08)
ATAD3248	12.57 (1.17)
ATAD3250	13.49 (1.25)
ATAD3254	14.41 (1.34)
ATAD3258	15.34 (1.42)

• Dimensions in parentheses are in square meters.

continued on next page

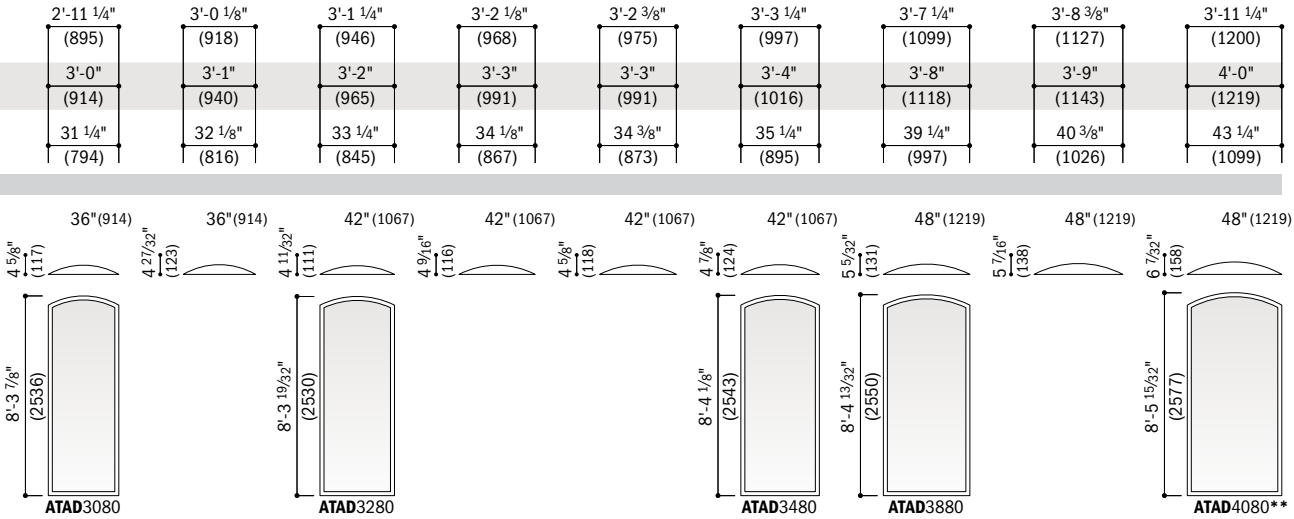

continued on next page

Direct-Set Arch Window Area Specifications *(continued)*

Window Number	Glass Area Sq. Ft./(m²)
ATAD3260	16.26 (1.51)
ATAD3264	17.18 (1.60)
ATAD3268	18.11 (1.68)
ATAD3274	19.95 (1.85)
ATAD3280	21.80 (2.03)
ATAD3310	2.51 (0.23)
ATAD3320	5.35 (0.50)
ATAD3324	6.30 (0.59)
ATAD3328	7.25 (0.67)
ATAD3330	8.19 (0.76)
ATAD3310G	2.54 (0.24)
ATAD3320G	5.40 (0.50)
ATAD3324G	6.35 (0.59)
ATAD3328G	7.31 (0.68)
ATAD3330G	8.26 (0.77)
ATAD3410	2.64 (0.25)
ATAD3420	5.58 (0.52)
ATAD3424	6.56 (0.61)
ATAD3428	7.54 (0.70)
ATAD3430	8.51 (0.79)
ATAD3434	9.49 (0.88)
ATAD3438	10.47 (0.97)
ATAD3440	11.45 (1.06)
ATAD3444	12.43 (1.15)
ATAD3448	13.41 (1.25)
ATAD3450	14.39 (1.34)
ATAD3454	15.37 (1.43)
ATAD3458	16.35 (1.52)
ATAD3460	17.33 (1.61)
ATAD3464	18.31 (1.70)
ATAD3468	19.29 (1.79)
ATAD3474	21.24 (1.97)
ATAD3480	23.20 (2.16)
ATAD3810	2.99 (0.28)
ATAD3820	6.26 (0.58)
ATAD3824	7.35 (0.68)
ATAD3828	8.44 (0.78)

Window Number	Glass Area Sq. Ft./(m²)
ATAD3830	9.53 (0.89)
ATAD3834	10.62 (0.99)
ATAD3838	11.71 (1.09)
ATAD3840	12.80 (1.19)
ATAD3844	13.89 (1.29)
ATAD3848	14.98 (1.39)
ATAD3850	16.07 (1.49)
ATAD3854	17.16 (1.59)
ATAD3858	18.25 (1.70)
ATAD3860	19.34 (1.80)
ATAD3864	20.43 (1.90)
ATAD3868	21.52 (2.00)
ATAD3874	23.70 (2.20)
ATAD3880	25.88 (2.40)
ATAD3910	3.13 (0.29)
ATAD3920	6.49 (0.60)
ATAD3924	7.62 (0.71)
ATAD3928	8.74 (0.81)
ATAD3930	9.86 (0.92)
ATAD4010	3.52 (0.33)
ATAD4020	7.12 (0.66)
ATAD4024	8.32 (0.77)
ATAD4028	9.52 (0.88)
ATAD4030	10.73 (1.00)
ATAD4034	11.93 (1.11)
ATAD4038	13.13 (1.22)
ATAD4040	14.33 (1.33)
ATAD4044	15.53 (1.44)
ATAD4048	16.73 (1.55)
ATAD4050	17.93 (1.67)
ATAD4054	19.14 (1.78)
ATAD4058	20.34 (1.89)
ATAD4060	21.54 (2.00)
ATAD4064	22.74 (2.11)
ATAD4068	23.94 (2.22)
ATAD4074	26.34 (2.45)
ATAD4080	28.75 (2.67)

Window Number	Glass Area Sq. Ft./(m²)
ATAD4310	3.61 (0.34)
ATAD4320	7.47 (0.69)
ATAD4324	8.76 (0.81)
ATAD4328	10.05 (0.93)
ATAD4330	11.34 (1.05)
ATAD4410	3.72 (0.35)
ATAD4420	7.66 (0.71)
ATAD4424	8.97 (0.83)
ATAD4428	10.29 (0.96)
ATAD4430	11.60 (1.08)
ATAD4434	12.91 (1.20)
ATAD4438	14.22 (1.32)
ATAD4440	15.54 (1.44)
ATAD4444	16.85 (1.57)
ATAD4448	18.16 (1.69)
ATAD4450	19.47 (1.81)
ATAD4454	20.79 (1.93)
ATAD4458	22.10 (2.05)
ATAD4460	23.41 (2.17)
ATAD4464	24.72 (2.30)
ATAD4468	26.04 (2.42)
ATAD4474	28.66 (2.66)
ATAD4480	31.29 (2.91)
ATAD4810	4.29 (0.40)
ATAD4820	8.56 (0.79)
ATAD4824	9.98 (0.93)
ATAD4828	11.40 (1.06)
ATAD4830	12.83 (1.19)
ATAD4834	14.25 (1.32)
ATAD4838	15.67 (1.46)
ATAD4840	17.10 (1.59)
ATAD4844	18.52 (1.72)
ATAD4848	19.95 (1.85)
ATAD4850	21.37 (1.99)
ATAD4854	22.79 (2.12)

• Dimensions in parentheses are in square meters.

continued on page 90

Custom-size windows are available in 1/8" (3) increments. Contact your Andersen supplier for more information.

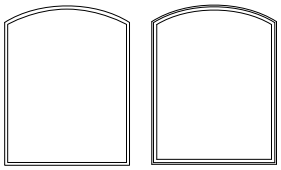

Direct-Set Arch Sash-Set Arch

Direct-set arch (ATAD) window sizes shown. Use window dimensions and minimum rough opening formula shown for sash-set arch (**ATA**) window sizes. For sash-set unobstructed glass dimensions, see pages 94-97. All sizes shown, along with custom sizes, are available with PG upgrade.

Grille patterns shown on page 105. Details shown on page 111.

• "Window Dimension" always refers to outside frame to frame dimension.
• **"Minimum Rough Opening" dimensions may need to be increased to allow for use of building wraps, flashing, sill panning, brackets, fasteners or other items. See pages 226-227 for more details.**
• Dimensions in parentheses are in millimeters.
**Tempered glass required. Some visual distortion may occur.

Table of Direct-Set Arch Window Sizes *(continued)*

Scale 1/8" (3) = 1'-0" (305) – 1:96

Notes on page 89 also apply to this page.

Window Dimension	4'-3 1/4" (1302)	4'-7 1/4" (1403)	4'-11 1/4" (1505)	5'-3 1/4" (1607)	5'-7 1/4" (1708)	5'-11 1/4" (1810)
Minimum Rough Opening	4'-4" (1321)	4'-8" (1422)	5'-0" (1524)	5'-4" (1626)	5'-8" (1727)	6'-0" (1829)
Unobstructed Glass	47 1/4" (1200)	51 1/4" (1302)	55 1/4" (1403)	59 1/4" (1607)	63 1/4" (1607)	67 1/4" (1708)

CUSTOM SIZES AVAILABLE

Window height shown in table

Minimum Rough Opening = window height + 3/4" (19)

Unobstructed Glass = window height – 4" (102)

CUSTOM SIZES AVAILABLE

Radius	60" (1524)	60" (1524)	60" (1524)	72" (1829)	72" (1829)	72" (1829)
Chord Height	5 3/4" (146)	6 3/4" (171)	7 13/16" (199)	7 5/16" (186)	8 11/32" (212)	9 7/16" (240)
Shoulder Height 11 1/4" (286)	1'-5" (432) **ATAD**4410	1'-6" (457) **ATAD**4810	1'-7 1/16" (484) **ATAD**5010	1'-6 9/16" (472) **ATAD**5410	1'-7 19/32" (497) **ATAD**5810	1'-8 11/16" (525) **ATAD**6010
23 1/4" (591)	2'-5" (737) **ATAD**4420	2'-6" (762) **ATAD**4820	2'-7 1/16" (789) **ATAD**5020	2'-6 9/16" (776) **ATAD**5420	2'-7 19/32" (802) **ATAD**5820	2'-8 11/16" (830) **ATAD**6020
27 1/4" (692)	2'-9" (838) **ATAD**4424	2'-10" (863) **ATAD**4824	2'-11 1/16" (891) **ATAD**5024	2'-10 9/16" (878) **ATAD**5424	2'-11 19/32" (904) **ATAD**5824	3'-0 11/16" (932) **ATAD**6024
31 1/4" (794)	3'-1" (940) **ATAD**4428	3'-2" (965) **ATAD**4828	3'-3 1/16" (992) **ATAD**5028	3'-2 9/16" (980) **ATAD**5428	3'-3 19/32" (1005) **ATAD**5828	3'-4 11/16" (1033) **ATAD**6028
35 1/4" (895)	3'-5" (1041) **ATAD**4430	3'-6" (1066) **ATAD**4830	3'-7 1/16" (1094) **ATAD**5030	3'-6 9/16" (1081) **ATAD**5430	3'-7 19/32" (1107) **ATAD**5830	3'-8 11/16" (1135) **ATAD**6030
39 1/4" (997)	3'-9" (1143) **ATAD**4434	3'-10" (1168) **ATAD**4834	3'-11 1/16" (1196) **ATAD**5034	3'-10 9/16" (1183) **ATAD**5434	3'-11 19/32" (1209) **ATAD**5834	4'-0 11/16" (1237) **ATAD**6034
43 1/4" (1099)	4'-1" (1245) **ATAD**4438	4'-2" (1270) **ATAD**4838	4'-3 1/16" (1297) **ATAD**5038	4'-2 9/16" (1284) **ATAD**5438	4'-3 19/32" (1310) **ATAD**5838	4'-4 11/16" (1338) **ATAD**6038
47 1/4" (1200)	4'-5" (1346) **ATAD**4440	4'-6" (1371) **ATAD**4840	4'-7 1/16" (1399) **ATAD**5040	4'-6 9/16" (1386) **ATAD**5440	4'-7 19/32" (1412) **ATAD**5840	4'-8 11/16" (1440) **ATAD**6040
51 1/4" (1302)	4'-9" (1448) **ATAD**4444	4'-10" (1473) **ATAD**4844	4'-11 1/16" (1500) **ATAD**5044	4'-10 9/16" (1488) **ATAD**5444	4'-11 19/32" (1513) **ATAD**5844	5'-0 11/16" (1541) **ATAD**6044
55 1/4" (1403)	5'-1" (1549) **ATAD**4448	5'-2" (1574) **ATAD**4848	5'-3 1/16" (1602) **ATAD**5048	5'-2 9/16" (1589) **ATAD**5448	5'-3 19/32" (1615) **ATAD**5848	5'-4 11/16" (1643) **ATAD**6048

- "Window Dimension" always refers to outside frame-to-frame dimension.
- "**Minimum Rough Opening**" **dimensions may need to be increased to allow for use of building wraps, flashing, sill panning, brackets, fasteners or other items. See pages 226-227 for more details.**
- Dimensions in parentheses are in millimeters.

Notes on page 89 also apply to this page.

6'-3 1/4" (1911)	6'-7 1/4" (2013)	6'-11 1/4" (2115)	7'-3 1/4" (2216)	7'-10 7/16" (2399)	7'-11 1/4" (2419)
6'-4" (1930)	6'-8" (2032)	7'-0" (2134)	7'-4" (2235)	7'-11" (2413)	8'-0" (2438)
71 1/4" (1810)	75 1/4" (1911)	79 1/4" (2013)	83 1/4" (2115)	90 7/16" (2297)	91 1/4" (2318)
84" (2134)	84" (2134)	84" (2134)	96" (2438)	96" (2438)	96" (2438)
8 29/32" (226)	9 15/16" (252)	11 1/32" (280)	10 1/2" (266)	12 13/32" (315)	12 21/32" (321)
1'-8 5/32" (512)	1'-9 3/16" (538)	1'-10 9/32" (566)	1'-9 3/4" (552)	1'-11 21/32" (601)	1'-11 29/32" (607)
ATAD6410	**ATAD**6810	**ATAD**7010	**ATAD**7410	**ATAD**71110	**ATAD**8010
2'-8 5/32" (817)	2'-9 3/16" (843)	2'-10 9/32" (871)	2'-9 3/4" (857)	2'-11 21/32" (906)	2'-11 29/32" (912)
ATAD6420	**ATAD**6820	**ATAD**7020	**ATAD**7420	**ATAD**71120	**ATAD**8020
3'-0 5/32" (918)	3'-1 3/16" (944)	3'-2 9/32" (973)	3'-1 3/4" (958)	3'-3 21/32" (1008)	3'-3 29/32" (1013)
ATAD6424	**ATAD**6824	**ATAD**7024	**ATAD**7424	**ATAD**71124	**ATAD**8024
3'-4 5/32" (1020)	3'-5 3/16" (1046)	3'-6 9/32" (1074)	3'-5 3/4" (1060)	3'-7 21/32" (1109)	3'-7 29/32" (1115)
ATAD6428	**ATAD**6828	**ATAD**7028	**ATAD**7428	**ATAD**71128	**ATAD**8028
3'-8 5/32" (1121)	3'-9 3/16" (1148)	3'-10 9/32" (1176)	3'-9 3/4" (1162)	3'-11 21/32" (1211)	3'-11 29/32" (1217)
ATAD6430	**ATAD**6830	**ATAD**7030	**ATAD**7430	**ATAD**71130	**ATAD**8030
4'-0 5/32" (1223)	4'-1 3/16" (1249)	4'-2 9/32" (1277)	4'-1 3/4" (1263)		4'-3 29/32" (1318)
ATAD6434	**ATAD**6834	**ATAD**7034	**ATAD**7434		**ATAD**8034
4'-4 5/32" (1325)	4'-5 3/16" (1351)	4'-6 9/32" (1379)	4'-5 3/4" (1365)		4'-7 29/32" (1420)
ATAD6438	**ATAD**6838	**ATAD**7038	**ATAD**7438		**ATAD**8038
4'-8 5/32" (1426)	4'-9 3/16" (1452)	4'-10 9/32" (1481)	4'-9 3/4" (1466)		4'-11 29/32" (1521)
ATAD6440	**ATAD**6840	**ATAD**7040	**ATAD**7440		**ATAD**8040
5'-0 5/32" (1528)	5'-1 3/16" (1554)	5'-2 9/32" (1582)	5'-1 3/4" (1568)		5'-3 29/32" (1623)
ATAD6444	**ATAD**6844	**ATAD**7044	**ATAD**7444		**ATAD**8044
5'-4 5/32" (1629)	5'-5 3/16" (1656)	5'-6 9/32" (1684)	5'-5 3/4" (1670)		5'-7 29/32" (1725)
ATAD6448	**ATAD**6848	**ATAD**7048	**ATAD**7448		**ATAD**8048

continued on next page

- "Window Dimension" always refers to outside frame-to-frame dimension.
- "**Minimum Rough Opening**" **dimensions may need to be increased to allow for use of building wraps, flashing, sill panning, brackets, fasteners or other items. See pages 226-227 for more details.**
- Dimensions in parentheses are in millimeters.

Table of Direct-Set Arch Window Sizes *(continued)*

Scale 1/8" (3) = 1'-0" (305) – 1:96

Notes on page 89 also apply to this page.

Window Dimension	4'-3 1/4" (1302)	4'-7 1/4" (1403)	4'-11 1/4" (1505)	5'-3 1/4" (1607)	5'-7 1/4" (1708)	5'-11 1/4" (1810)
Minimum Rough Opening	4'-4" (1321)	4'-8" (1422)	5'-0" (1524)	5'-4" (1626)	5'-8" (1727)	6'-0" (1829)
Unobstructed Glass	47 1/4" (1200)	51 1/4" (1302)	55 1/4" (1403)	59 1/4" (1505)	63 1/4" (1607)	67 1/4" (1708)

CUSTOM SIZES AVAILABLE

Window height shown in table

Minimum Rough Opening = window height + 3/4" (19)

Unobstructed Glass = window height – 4" (102)

CUSTOM SIZES AVAILABLE

Radius	60" (1524)	60" (1524)	60" (1524)	72" (1829)	72" (1829)	72" (1829)
Chord Height	5 3/4" (146)	6 3/4" (171)	7 13/16" (199)	7 5/16" (186)	8 11/32" (212)	9 7/16" (240)
Shoulder Height 59 1/4" (1505)	5'-5" (1651) **ATAD**4450	5'-6" (1676) **ATAD**4850	5'-7 1/16" (1704) **ATAD**5050	5'-6 9/16" (1691) **ATAD**5450	5'-7 19/32" (1717) **ATAD**5850	5'-8 11/16" (1745) **ATAD**6050
63 1/4" (1607)	5'-9" (1753) **ATAD**4454	5'-10" (1778) **ATAD**4854	5'-11 1/16" (1805) **ATAD**5054	5'-10 9/16" (1792) **ATAD**5454	5'-11 19/32" (1818) **ATAD**5854	6'-0 11/16" (1846) **ATAD**6054
67 1/4" (1708)	6'-1" (1854) **ATAD**4458	6'-2" (1879) **ATAD**4858	6'-3 1/16" (1907) **ATAD**5058	6'-2 9/16" (1894) **ATAD**5458	6'-3 19/32" (1920) **ATAD**5858	6'-4 11/16" (1948) **ATAD**6058
71 1/4" (1810)	6'-5" (1956) **ATAD**4460	6'-6" (1981) **ATAD**4860	6'-7 1/16" (2008) **ATAD**5060	6'-6 9/16" (1996) **ATAD**5460	6'-7 19/32" (2021) **ATAD**5860	6'-8 11/16" (2049) **ATAD**6060
75 1/4" (1911)	6'-9" (2057) **ATAD**4464	6'-10" (2082) **ATAD**4864	6'-11 1/16" (2110) **ATAD**5064	6'-10 9/16" (2097) **ATAD**5464	6'-11 19/32" (2123) **ATAD**5864	7'-0 11/16" (2151) **ATAD**6064
79 1/4" (2013)	7'-1" (2159) **ATAD**4468	7'-2" (2184) **ATAD**4868	7'-3 1/16" (2212) **ATAD**5068	7'-2 9/16" (2199) **ATAD**5468	7'-3 19/32" (2225) **ATAD**5868	7'-4 11/16" (2253) **ATAD**6068
87 1/4" (2216)	7'-9" (2362) **ATAD**4474	7'-10" (2387) **ATAD**4874	7'-11 1/16" (2415) **ATAD**5074	7'-10 9/16" (2402) **ATAD**5474	7'-11 19/32" (2428) **ATAD**5874	8'-0 11/16" (2456) **ATAD**6074

- "Window Dimension" always refers to outside frame-to-frame dimension.
- "**Minimum Rough Opening**" **dimensions may need to be increased to allow for use of building wraps, flashing, sill panning, brackets, fasteners or other items. See pages 226-227 for more details.**
- Dimensions in parentheses are in millimeters.

6'-3 1/4" (1911)	6'-7 1/4" (2013)	6'-11 1/4" (2115)	7'-3 1/4" (2216)	7'-10 7/16" (2399)	7'-11 1/4" (2419)
6'-4" (1930)	6'-8" (2032)	7'-0" (2134)	7'-4" (2235)	7'-11" (2413)	8'-0" (2438)
71 1/4" (1810)	75 1/4" (1911)	79 1/4" (2013)	83 1/4" (2115)	90 7/16" (2297)	91 1/4" (2318)

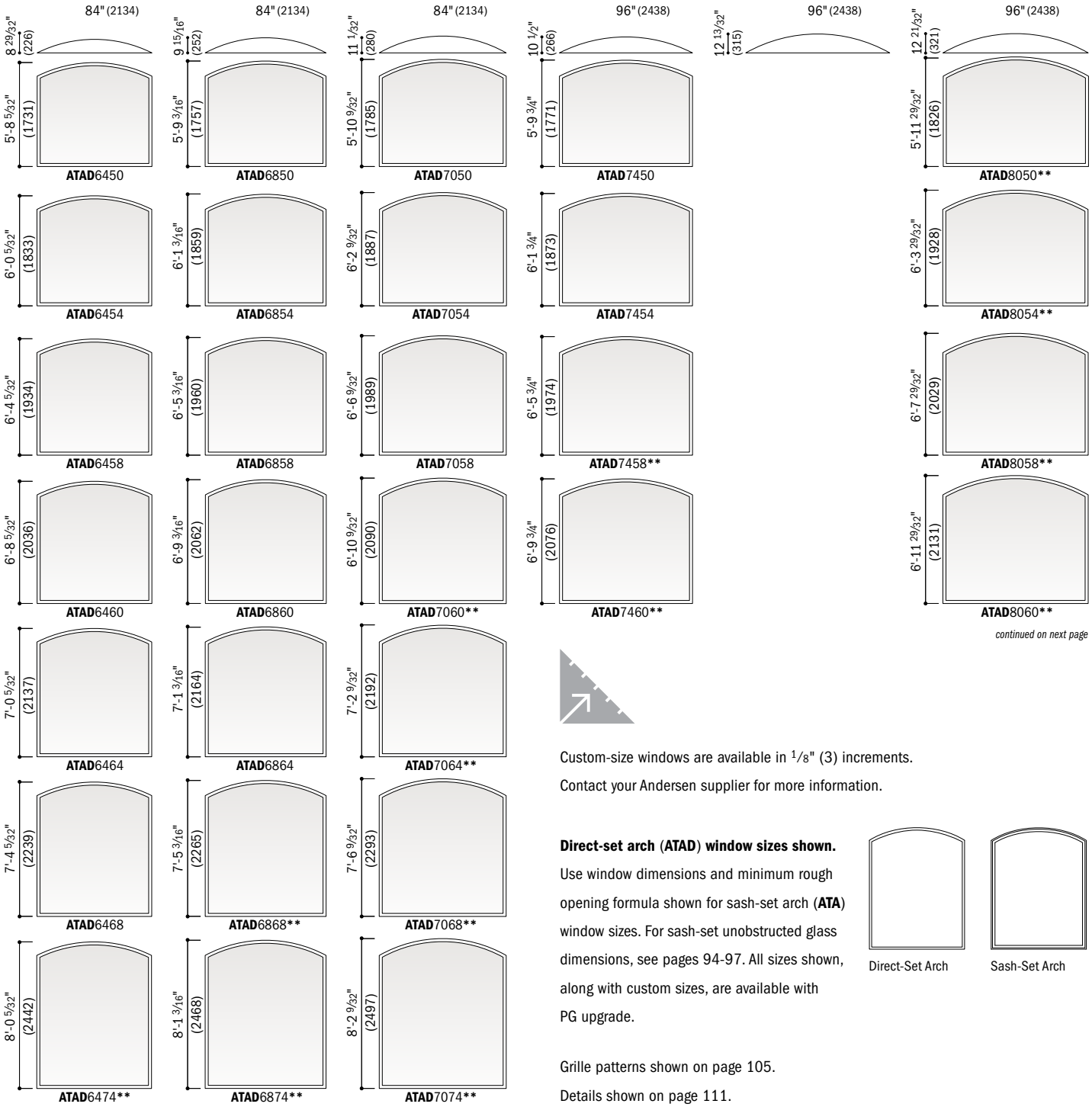

continued on next page

Custom-size windows are available in 1/8" (3) increments.
Contact your Andersen supplier for more information.

Direct-set arch (ATAD) window sizes shown. Use window dimensions and minimum rough opening formula shown for sash-set arch (**ATA**) window sizes. For sash-set unobstructed glass dimensions, see pages 94-97. All sizes shown, along with custom sizes, are available with PG upgrade.

Direct-Set Arch

Sash-Set Arch

Grille patterns shown on page 105.

Details shown on page 111.

- "Window Dimension" always refers to outside frame-to-frame dimension.
- "**Minimum Rough Opening**" **dimensions may need to be increased to allow for use of building wraps, flashing, sill panning, brackets, fasteners or other items. See pages 226-227 for more details.**
- Dimensions in parentheses are in millimeters.
- **Tempered glass required. Some visual distortion may occur.

Table of Direct-Set Arch Window Sizes *(continued)*

Scale ⅛" (3) = 1'-0" (305) – 1:96

Notes on the next page also apply to this page.

Window Dimension	4'-3 ¼" (1302)	4'-7 ¼" (1403)	4'-11 ¼" (1505)	5'-3 ¼" (1607)	5'-7 ¼" (1708)	5'-11 ¼" (1810)
Minimum Rough Opening	4'-4" (1321)	4'-8" (1422)	5'-0" (1524)	5'-4" (1626)	5'-8" (1727)	6'-0" (1829)
Unobstructed Glass	47 ¼" (1200)	51 ¼" (1302)	55 ¼" (1403)	59 ¼" (1505)	63 ¼" (1607)	67 ¼" (1708)
CUSTOM SIZES AVAILABLE						
Window height shown in table	Radius	60" (1524)	60" (1524)	60" (1524)	72" (1829)	72" (1829)	72" (1829)
	Chord Height	5 ¾" (146)	6 ¾" (171)	7 13/16" (199)	7 5/16" (186)	8 11/32" (212)	9 7/16" (240)
Minimum Rough Opening = window height + ¾" (19) / Unobstructed Glass = window height – 4" (102) / **CUSTOM SIZES AVAILABLE**	Shoulder Height	95 ¼" (2419) / 8'-5" (2565)	8'-6" (2590)	8'-7 1/16" (2618)	8'-6 9/16" (2605)	8'-7 19/32" (2631)	8'-8 11/16" (2659)
		ATAD4480	**ATAD**4880	**ATAD**5080	**ATAD**5480**	**ATAD**5880**	**ATAD**6080**

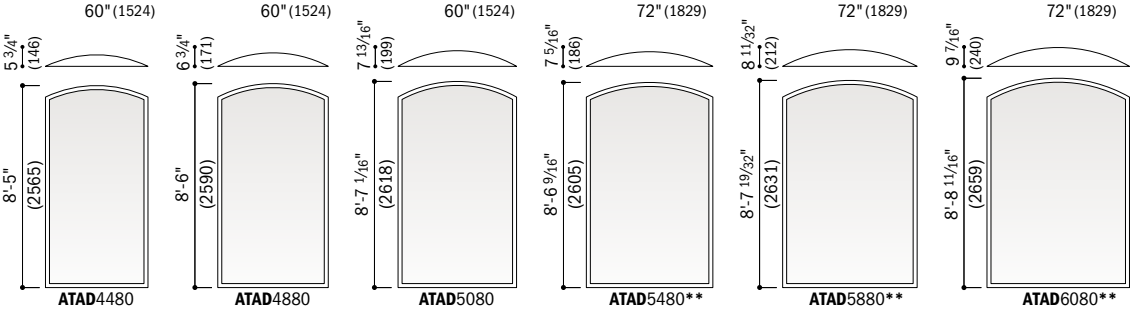

- "Window Dimension" always refers to outside frame-to-frame dimension.
- "**Minimum Rough Opening**" **dimensions may need to be increased to allow for use of building wraps, flashing, sill panning, brackets, fasteners or other items. See pages 226-227 for more details.**
- Dimensions in parentheses are in millimeters.

**Tempered glass required. Some visual distortion may occur.

Direct-Set Arch Window Area Specifications *(continued from page 85)*

Window Number	Glass Area Sq. Ft./(m²)
ATAD4858	24.22 (2.25)
ATAD4860	25.64 (2.38)
ATAD4864	27.06 (2.51)
ATAD4868	28.49 (2.65)
ATAD4874	31.33 (2.91)
ATAD4880	34.18 (3.18)
ATAD5010	4.91 (0.46)
ATAD5020	9.52 (0.88)
ATAD5024	11.05 (1.03)
ATAD5028	12.58 (1.17)
ATAD5030	14.12 (1.31)
ATAD5034	15.65 (1.45)
ATAD5038	17.19 (1.60)
ATAD5040	18.72 (1.74)
ATAD5044	20.26 (1.88)
ATAD5048	21.79 (2.02)
ATAD5050	23.33 (2.17)
ATAD5054	24.86 (2.31)
ATAD5058	26.40 (2.45)
ATAD5060	27.93 (2.59)
ATAD5064	29.47 (2.74)
ATAD5068	31.00 (2.88)
ATAD5074	34.07 (3.17)
ATAD5080	37.14 (3.45)
ATAD5410	5.11 (0.47)
ATAD5420	10.05 (0.93)
ATAD5424	11.69 (1.09)
ATAD5428	13.34 (1.24)
ATAD5430	14.98 (1.39)
ATAD5434	16.63 (1.54)
ATAD5438	18.28 (1.70)
ATAD5440	19.92 (1.85)

Window Number	Glass Area Sq. Ft./(m²)
ATAD5444	21.57 (2.00)
ATAD5448	23.21 (2.16)
ATAD5450	24.86 (2.31)
ATAD5454	26.51 (2.46)
ATAD5458	28.15 (2.62)
ATAD5460	29.80 (2.77)
ATAD5464	31.44 (2.92)
ATAD5468	33.09 (3.07)
ATAD5474	36.38 (3.38)
ATAD5480	39.67 (3.69)
ATAD5810	5.76 (0.54)
ATAD5820	11.04 (1.03)
ATAD5824	12.79 (1.19)
ATAD5828	14.55 (1.35)
ATAD5830	16.31 (1.51)
ATAD5834	18.06 (1.68)
ATAD5838	19.82 (1.84)
ATAD5840	21.58 (2.00)
ATAD5844	23.33 (2.17)
ATAD5848	25.09 (2.33)
ATAD5850	26.85 (2.49)
ATAD5854	28.60 (2.66)
ATAD5858	30.36 (2.82)
ATAD5860	32.12 (2.98)
ATAD5864	33.88 (3.15)
ATAD5868	35.63 (3.31)
ATAD5874	39.15 (3.64)
ATAD5880	42.66 (3.96)
ATAD6010	6.49 (0.60)
ATAD6020	12.09 (1.12)
ATAD6024	13.96 (1.30)
ATAD6028	15.83 (1.47)

Window Number	Glass Area Sq. Ft./(m²)
ATAD6030	17.69 (1.64)
ATAD6034	19.56 (1.82)
ATAD6038	21.43 (1.99)
ATAD6040	23.30 (2.16)
ATAD6044	25.17 (2.34)
ATAD6048	27.03 (2.51)
ATAD6050	28.90 (2.69)
ATAD6054	30.77 (2.86)
ATAD6058	32.64 (3.03)
ATAD6060	34.51 (3.21)
ATAD6064	36.37 (3.38)
ATAD6068	38.24 (3.55)
ATAD6074	41.98 (3.90)
ATAD6080	45.71 (4.25)
ATAD6410	6.67 (0.62)
ATAD6420	12.61 (1.17)
ATAD6424	14.59 (1.36)
ATAD6428	16.57 (1.54)
ATAD6430	18.55 (1.72)
ATAD6434	20.53 (1.91)
ATAD6438	22.51 (2.09)
ATAD6440	24.49 (2.27)
ATAD6444	26.47 (2.46)
ATAD6448	28.45 (2.64)
ATAD6450	30.42 (2.83)
ATAD6454	32.40 (3.01)
ATAD6458	34.38 (3.19)
ATAD6460	36.36 (3.38)
ATAD6464	38.34 (3.56)
ATAD6468	40.32 (3.75)
ATAD6474	44.28 (4.11)
ATAD6480	48.24 (4.48)

Window Number	Glass Area Sq. Ft./(m²)
ATAD6810	7.42 (0.69)
ATAD6820	13.70 (1.27)
ATAD6824	15.79 (1.47)
ATAD6828	17.88 (1.66)
ATAD6830	19.97 (1.85)
ATAD6834	22.06 (2.05)
ATAD6838	24.15 (2.24)
ATAD6840	26.24 (2.44)
ATAD6844	28.33 (2.63)
ATAD6848	30.42 (2.83)
ATAD6850	32.51 (3.02)
ATAD6854	34.60 (3.21)
ATAD6858	36.69 (3.41)
ATAD6860	38.78 (3.60)
ATAD6864	40.87 (3.80)
ATAD6868	42.96 (3.99)
ATAD6874	47.14 (4.38)
ATAD6880	51.32 (4.77)
ATAD7010	8.24 (0.77)
ATAD7020	14.85 (1.38)
ATAD7024	17.05 (1.58)
ATAD7028	19.25 (1.79)
ATAD7030	21.45 (1.99)
ATAD7034	23.65 (2.20)
ATAD7038	25.85 (2.40)
ATAD7040	28.05 (2.61)
ATAD7044	30.26 (2.81)
ATAD7048	32.46 (3.02)
ATAD7050	34.66 (3.22)
ATAD7054	36.86 (3.42)

- Dimensions in parentheses are in square meters.

continued on next page

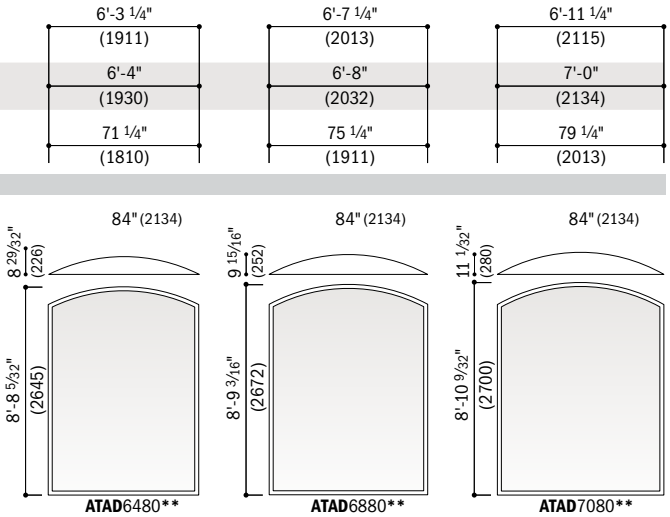

• "Window Dimension" always refers to outside frame-to-frame dimension.
• **"Minimum Rough Opening" dimensions may need to be increased to allow for use of building wraps, flashing, sill panning, brackets, fasteners or other items. See pages 226-227 for more details.**
• Dimensions in parentheses are in millimeters.
**Tempered glass required. Some visual distortion may occur.

continued on next page

Custom-size windows are available in 1/8" (3) increments. Contact your Andersen supplier for more information.

Direct-set arch (ATAD) window sizes shown. Use window dimensions and minimum rough opening formula shown for sash-set arch (**ATA**) window sizes. For sash-set unobstructed glass dimensions, see pages 94-97. All sizes shown, along with custom sizes, are available with PG upgrade.

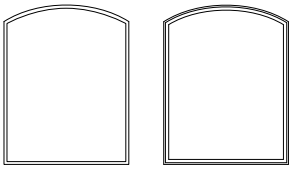

Direct-Set Arch Sash-Set Arch

Grille patterns shown on page 105.

Details shown on page 111.

Direct-Set Arch Window Area Specifications *(continued)*

Window Number	Glass Area Sq. Ft./(m²)
ATAD7058	39.06 (3.63)
ATAD7060	41.26 (3.83)
ATAD7064	43.46 (4.04)
ATAD7068	45.67 (4.24)
ATAD7074	50.07 (4.65)
ATAD7080	54.47 (5.06)
ATAD7410	8.42 (0.78)
ATAD7420	15.36 (1.43)
ATAD7424	17.67 (1.64)
ATAD7428	19.98 (1.86)
ATAD7430	22.30 (2.07)
ATAD7434	24.61 (2.29)
ATAD7438	26.92 (2.50)
ATAD7440	29.23 (2.72)
ATAD7444	31.55 (2.93)
ATAD7448	33.86 (3.15)
ATAD7450	36.17 (3.36)
ATAD7454	38.48 (3.58)
ATAD7458	40.80 (3.76)
ATAD7460	43.11 (4.00)
ATAD71110	9.99 (0.93)
ATAD71120	17.52 (1.63)
ATAD71124	20.04 (1.86)
ATAD71128	22.55 (2.09)
ATAD71130	25.06 (2.33)
ATAD8010	10.18 (0.95)
ATAD8020	17.78 (1.65)
ATAD8024	20.32 (1.89)
ATAD8028	22.85 (2.12)
ATAD8030	25.39 (2.36)
ATAD8034	27.92 (2.59)
ATAD8038	30.46 (2.83)

Window Number	Glass Area Sq. Ft./(m²)
ATAD8040	32.99 (3.06)
ATAD8044	35.53 (3.30)
ATAD8048	38.06 (3.54)
ATAD8050	40.60 (3.77)
ATAD8054	43.13 (4.01)
ATAD8058	45.66 (4.24)
ATAD8060	48.20 (4.48)
ATAD8810	10.58 (0.98)
ATAD8820	18.85 (1.75)
ATAD8824	21.60 (2.01)
ATAD8828	24.36 (2.26)
ATAD8830	27.12 (2.52)
ATAD8834	29.87 (2.78)
ATAD8838	32.63 (3.03)
ATAD8840	35.39 (3.29)
ATAD8844	38.15 (3.54)
ATAD8848	40.90 (3.80)
ATAD8850	43.66 (4.06)
ATAD8854	46.42 (4.31)
ATAD8858	49.17 (4.57)
ATAD8860	51.93 (4.82)
ATAD81110	11.30 (1.05)
ATAD81120	19.83 (1.84)
ATAD81124	22.68 (2.11)
ATAD81128	25.52 (2.37)
ATAD81130	28.37 (2.64)
ATAD9410	12.46 (1.16)
ATAD9420	21.39 (1.99)
ATAD9424	24.37 (2.26)
ATAD9428	27.35 (2.54)
ATAD9430	30.33 (2.82)
ATAD9434	33.31 (3.09)

Window Number	Glass Area Sq. Ft./(m²)
ATAD9438	36.29 (3.37)
ATAD9440	39.27 (3.65)
ATAD9444	42.25 (3.92)
ATAD9448	45.23 (4.20)
ATAD9450	48.21 (4.48)
ATAD9454	51.18 (4.76)
ATAD9458	54.16 (5.03)
ATAD10010	14.60 (1.36)
ATAD10020	24.20 (2.25)
ATAD10024	27.40 (2.55)
ATAD10028	30.60 (2.84)
ATAD10030	33.80 (3.14)
ATAD10034	37.01 (3.44)
ATAD10038	40.21 (3.74)
ATAD10040	43.41 (4.03)
ATAD10044	46.61 (4.33)
ATAD10048	49.81 (4.63)
ATAD10050	53.01 (4.92)
ATAD10054	56.21 (5.22)
ATAD10058	59.42 (5.52)
ATAD10810	15.88 (1.47)
ATAD10820	26.15 (2.43)
ATAD10824	29.57 (2.75)
ATAD10828	32.99 (3.07)
ATAD10830	36.42 (3.38)
ATAD10834	39.84 (3.70)
ATAD10838	43.26 (4.02)
ATAD10840	46.69 (4.34)
ATAD10844	50.11 (4.66)
ATAD10848	53.54 (4.97)
ATAD10850	56.96 (5.29)
ATAD10854	60.38 (5.61)

Window Number	Glass Area Sq. Ft./(m²)
ATAD10858	63.81 (5.93)
ATAD11410	17.21 (1.60)
ATAD11420	28.15 (2.62)
ATAD11424	31.80 (2.95)
ATAD11428	35.44 (3.29)
ATAD11430	39.09 (3.63)
ATAD11434	42.74 (3.97)
ATAD11438	46.38 (4.31)
ATAD11440	50.03 (4.65)
ATAD11444	53.67 (4.99)
ATAD11448	57.32 (5.32)
ATAD11450	60.96 (5.66)
ATAD11454	64.61 (6.00)
ATAD12010	19.74 (1.83)
ATAD12020	31.34 (2.91)
ATAD12024	35.21 (3.27)
ATAD12028	39.08 (3.63)
ATAD12030	42.95 (3.99)
ATAD12034	46.82 (4.35)
ATAD12038	50.68 (4.71)
ATAD12040	54.55 (5.07)
ATAD12044	58.42 (5.43)
ATAD12048	62.29 (5.79)
ATAD12050	66.16 (6.15)
ATAD12054	70.02 (6.51)

• Dimensions in parentheses are in square meters.

Table of Direct-Set Arch Window Sizes *(continued)*

Scale 1/8" (3) = 1'-0" (305) – 1:96

Notes on the next page also apply to this page.

Window Dimension	8'-7 1/4" (2623)	8'-10 7/16" (2704)	9'-3 1/4" (2826)	9'-11 1/4" (3029)
Minimum Rough Opening	8'-8" (2642)	8'-11" (2718)	9'-4" (2845)	10'-0" (3048)
Unobstructed Glass	99 1/4" (2521)	102 7/16" (2602)	107 1/4" (2724)	115 1/4" (2927)

CUSTOM SIZES AVAILABLE

Window height shown in table

Minimum Rough Opening = window height + 3/4" (19)

Unobstructed Glass = window height – 4" (102)

CUSTOM SIZES AVAILABLE

Radius	120" (3048)	120" (3048)	120" (3048)	120" (3048)
Chord Height	11 11/16" (296)	12 7/16" (316)	13 21/32" (347)	15 7/8" (403)
Shoulder Height 11 1/4" (286)	1'-10 15/16" (582) **ATAD**8810	1'-11 11/16" (602) **ATAD**81110	2'-0 29/32" (633) **ATAD**9410	2'-3 1/8" (689) **ATAD**10010
23 1/4" (591)	2'-10 15/16" (887) **ATAD**8820	2'-11 11/16" (907) **ATAD**81120	3'-0 29/32" (938) **ATAD**9420	3'-3 1/8" (993) **ATAD**10020
27 1/4" (692)	3'-2 15/16" (989) **ATAD**8824	3'-3 11/16" (1008) **ATAD**81124	3'-4 29/32" (1039) **ATAD**9424	3'-7 1/8" (1095) **ATAD**10024**
31 1/4" (794)	3'-6 15/16" (1090) **ATAD**8828	3'-7 11/16" (1110) **ATAD**81128	3'-8 29/32" (1141) **ATAD**9428**	3'-11 1/8" (1197) **ATAD**10028**
35 1/4" (895)	3'-10 15/16" (1192) **ATAD**8830	3'-11 11/16" (1211) **ATAD**81130**	4'-0 29/32" (1243) **ATAD**9430**	4'-3 1/8" (1298) **ATAD**10030**
39 1/4" (997)	4'-2 15/16" (1293) **ATAD**8834		4'-4 29/32" (1344) **ATAD**9434**	4'-7 1/8" (1400) **ATAD**10034**
43 1/4" (1099)	4'-6 15/16" (1395) **ATAD**8838		4'-8 29/32" (1446) **ATAD**9438**	4'-11 1/8" (1501) **ATAD**10038**
47 1/4" (1200)	4'-10 15/16" (1497) **ATAD**8840		5'-0 29/32" (1547) **ATAD**9440**	5'-3 1/8" (1603) **ATAD**10040**
51 1/4" (1302)	5'-2 15/16" (1598) **ATAD**8844**		5'-4 29/32" (1649) **ATAD**9444**	5'-7 1/8" (1705) **ATAD**10044**
55 1/4" (1403)	5'-6 15/16" (1700) **ATAD**8848**		5'-8 29/32" (1751) **ATAD**9448**	5'-11 1/8" (1806) **ATAD**10048**

- "Window Dimension" always refers to outside frame-to-frame dimension.
- "**Minimum Rough Opening**" **dimensions may need to be increased to allow for use of building wraps, flashing, sill panning, brackets, fasteners or other items. See pages 226-227 for more details.**
- Dimensions in parentheses are in millimeters.

**Tempered glass required. Some visual distortion may occur.

10'-6 1/8" (3203)	11'-3 1/4" (3435)	11'-11 1/4" (3639)
10'-8" (3251)	11'-4" (3454)	12'-0" (3658)
123 1/4" (3131)	131 1/4" (3334)	139 1/4" (3537)

132" (3353)	144" (3658)	144" (3658)
16 11/32" (415) / 2'-3 19/32" (701)	16 7/8" (428) / 2'-4 1/8" (714)	19 1/16" (485) / 2'-6 5/16" (770)
ATAD10810	**ATAD**11410	**ATAD**12010
3'-3 19/32" (1006)	3'-4 1/8" (1019)	3'-6 5/16" (1075)
ATAD10820**	**ATAD**11420**	**ATAD**12020**
3'-7 19/32" (1107)	3'-8 1/8" (1121)	3'-10 5/16" (1177)
ATAD10824**	**ATAD**11424**	**ATAD**12024**
3'-11 19/32" (1209)	4'-0 1/8" (1222)	4'-2 5/16" (1278)
ATAD10828**	**ATAD**11428**	**ATAD**12028**
4'-3 19/32" (1311)	4'-4 1/8" (1324)	4'-6 5/16" (1380)
ATAD10830**	**ATAD**11430**	**ATAD**12030**
4'-7 19/32" (1412)	4'-8 1/8" (1425)	4'-10 5/16" (1481)
ATAD10834**	**ATAD**11434**	**ATAD**12034**
4'-11 19/32" (1514)	5'-0 1/8" (1527)	5'-2 5/16" (1583)
ATAD10838**	**ATAD**11438**	**ATAD**12038**
5'-3 19/32" (1615)	5'-4 1/8" (1629)	5'-6 5/16" (1685)
ATAD10840**	**ATAD**11440**	**ATAD**12040**
5'-7 19/32" (1717)	5'-8 1/8" (1730)	5'-10 5/16" (1786)
ATAD10844**	**ATAD**11444**	**ATAD**12044**
5'-11 19/32" (1819)	6'-0 1/8" (1832)	6'-2 5/16" (1888)
ATAD10848**	**ATAD**11448**	**ATAD**12048**

continued on next page

Custom-size windows are available in 1/8" (3) increments. Contact your Andersen supplier for more information.

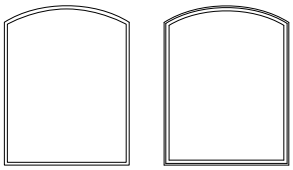

Direct-Set Arch Sash-Set Arch

Direct-set arch (ATAD) window sizes shown. Use window dimensions and minimum rough opening formula shown for sash-set arch (**ATA**) window sizes. For sash-set unobstructed glass dimensions, see pages 94-97.

All sizes shown, along with custom sizes, are available with PG upgrade.

Grille patterns shown on page 105. Details shown on page 111.

- "Window Dimension" always refers to outside frame-to-frame dimension.
- "**Minimum Rough Opening**" **dimensions may need to be increased to allow for use of building wraps, flashing, sill panning, brackets, fasteners or other items. See pages 226-227 for more details.**
- Dimensions in parentheses are in millimeters.
- **Tempered glass required. Some visual distortion may occur.

Table of Direct-Set Arch Window Sizes *(continued)*

Scale 1/8" (3) = 1'-0" (305) – 1:96

Notes on the next page also apply to this page.

Window Dimension	8'-7 1/4" (2623)	8'-10 7/16" (2704)	9'-3 1/4" (2826)	9'-11 1/4" (3029)
Minimum Rough Opening	8'-8" (2642)	8'-11" (2718)	9'-4" (2845)	10'-0" (3048)
Unobstructed Glass	99 1/4" (2521)	102 7/16" (2602)	107 1/4" (2724)	115 1/4" (2927)

CUSTOM SIZES AVAILABLE

Window height shown in table

Minimum Rough Opening = window height + 3/4" (19)

Unobstructed Glass = window height – 4" (102)

CUSTOM SIZES AVAILABLE

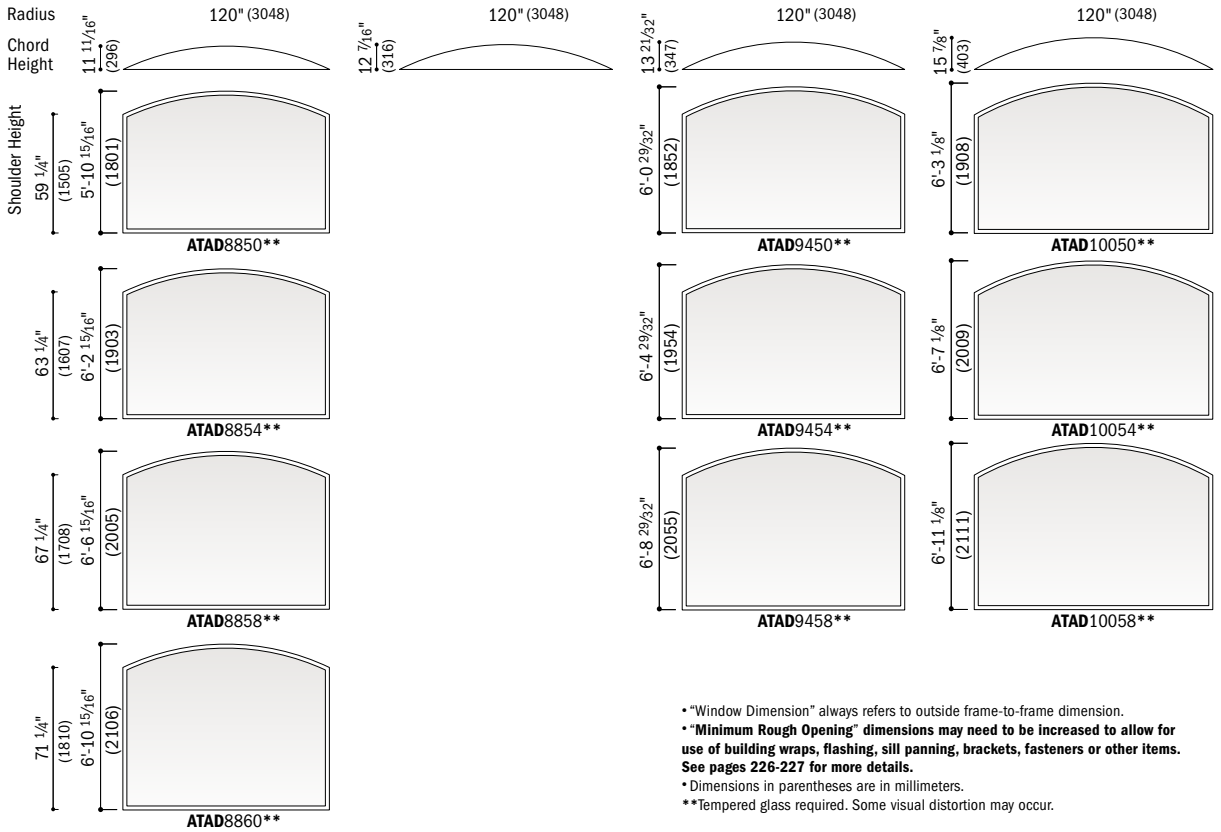

- "Window Dimension" always refers to outside frame-to-frame dimension.
- "**Minimum Rough Opening**" **dimensions may need to be increased to allow for use of building wraps, flashing, sill panning, brackets, fasteners or other items. See pages 226-227 for more details.**
- Dimensions in parentheses are in millimeters.
- **Tempered glass required. Some visual distortion may occur.

Sash-Set Arch Window Unobstructed Glass Dimensions and Area Specifications

Window Number	Unobstructed Glass Width Inches/(mm)	Unobstructed Glass Height Inches/(mm)	Glass Area Sq. Ft./(m²)
ATA2010	16 5/8" (421)	7 5/8" (193)	0.81 (0.08)
ATA2020	16 5/8" (421)	19 5/8" (498)	2.19 (0.20)
ATA2024	16 5/8" (421)	23 5/8" (599)	2.65 (0.25)
ATA2028	16 5/8" (421)	27 5/8" (701)	3.11 (0.29)
ATA2030	16 5/8" (421)	31 5/8" (803)	3.58 (0.33)
ATA2034	16 5/8" (421)	35 5/8" (904)	4.04 (0.37)
ATA2038	16 5/8" (421)	39 5/8" (1006)	4.50 (0.42)
ATA2040	16 5/8" (421)	43 5/8" (1107)	4.96 (0.46)
ATA2044	16 5/8" (421)	47 5/8" (1209)	5.42 (0.50)
ATA2048	16 5/8" (421)	51 5/8" (1311)	5.88 (0.55)
ATA2050	16 5/8" (421)	55 5/8" (1412)	6.34 (0.59)
ATA2054	16 5/8" (421)	59 5/8" (1514)	6.80 (0.63)
ATA2058	16 5/8" (421)	63 5/8" (1615)	7.26 (0.67)
ATA2060	16 5/8" (421)	67 5/8" (1717)	7.72 (0.72)
ATA2064	16 5/8" (421)	71 5/8" (1819)	8.18 (0.76)
ATA2068	16 5/8" (421)	75 5/8" (1920)	8.65 (0.80)
ATA2074	16 5/8" (421)	83 5/8" (2123)	9.57 (0.89)
ATA2080	16 5/8" (421)	91 5/8" (2327)	10.49 (0.97)
ATA2110	17 1/2" (444)	7 1/8" (181)	0.81 (0.07)
ATA2120	17 1/2" (444)	19 1/8" (486)	2.26 (0.21)

Window Number	Unobstructed Glass Width Inches/(mm)	Unobstructed Glass Height Inches/(mm)	Glass Area Sq. Ft./(m²)
ATA2124	17 1/2" (444)	23 1/8" (587)	2.75 (0.26)
ATA2128	17 1/2" (444)	27 1/8" (689)	3.23 (0.30)
ATA2130	17 1/2" (444)	31 1/8" (791)	3.72 (0.35)
ATA2410	20 5/8" (523)	7 7/8" (200)	1.03 (0.10)
ATA2420	20 5/8" (523)	19 7/8" (505)	2.74 (0.25)
ATA2424	20 5/8" (523)	23 7/8" (606)	3.32 (0.31)
ATA2428	20 5/8" (523)	27 7/8" (708)	3.89 (0.36)
ATA2430	20 5/8" (523)	31 7/8" (809)	4.46 (0.41)
ATA2434	20 5/8" (523)	35 7/8" (911)	5.03 (0.47)
ATA2438	20 5/8" (523)	39 7/8" (1013)	5.60 (0.52)
ATA2440	20 5/8" (523)	43 7/8" (1114)	6.18 (0.57)
ATA2444	20 5/8" (523)	47 7/8" (1216)	6.75 (0.63)
ATA2448	20 5/8" (523)	51 7/8" (1317)	7.32 (0.68)
ATA2450	20 5/8" (523)	55 7/8" (1419)	7.89 (0.73)
ATA2454	20 5/8" (523)	59 7/8" (1521)	8.46 (0.79)
ATA2458	20 5/8" (523)	63 7/8" (1622)	9.04 (0.84)
ATA2460	20 5/8" (523)	67 7/8" (1724)	9.61 (0.89)
ATA2464	20 5/8" (523)	71 7/8" (1825)	10.18 (0.95)
ATA2468	20 5/8" (523)	75 7/8" (1927)	10.75 (1.00)
ATA2474	20 5/8" (523)	83 7/8" (2130)	11.90 (1.11)

Window Number	Unobstructed Glass Width Inches/(mm)	Unobstructed Glass Height Inches/(mm)	Glass Area Sq. Ft./(m²)
ATA2480	20 5/8" (523)	91 7/8" (2333)	13.04 (1.21)
ATA2610	22 5/8" (574)	8 3/8" (213)	1.19 (0.11)
ATA2620	22 5/8" (574)	20 3/8" (518)	3.07 (0.29)
ATA2624	22 5/8" (574)	24 3/8" (620)	3.70 (0.34)
ATA2628	22 5/8" (574)	28 3/8" (721)	4.33 (0.40)
ATA2630	22 5/8" (574)	32 3/8" (823)	4.95 (0.46)
ATA2634	22 5/8" (574)	36 3/8" (925)	5.58 (0.52)
ATA2638	22 5/8" (574)	40 3/8" (1026)	6.21 (0.58)
ATA2640	22 5/8" (574)	44 3/8" (1128)	6.84 (0.64)
ATA2644	22 5/8" (574)	48 3/8" (1229)	7.47 (0.69)
ATA2648	22 5/8" (574)	52 3/8" (1331)	8.09 (0.75)
ATA2650	22 5/8" (574)	56 3/8" (1433)	8.72 (0.81)
ATA2654	22 5/8" (574)	60 3/8" (1534)	9.35 (0.87)
ATA2658	22 5/8" (574)	64 3/8" (1636)	9.98 (0.93)
ATA2660	22 5/8" (574)	68 3/8" (1737)	10.60 (0.99)
ATA2664	22 5/8" (574)	72 3/8" (1839)	11.23 (1.04)
ATA2668	22 5/8" (574)	76 3/8" (1941)	11.86 (1.10)
ATA2674	22 5/8" (574)	84 3/8" (2144)	13.11 (1.22)
ATA2680	22 5/8" (574)	92 3/8" (2347)	14.37 (1.33)

- Dimensions in parentheses are in millimeters or square meters.

continued on next page

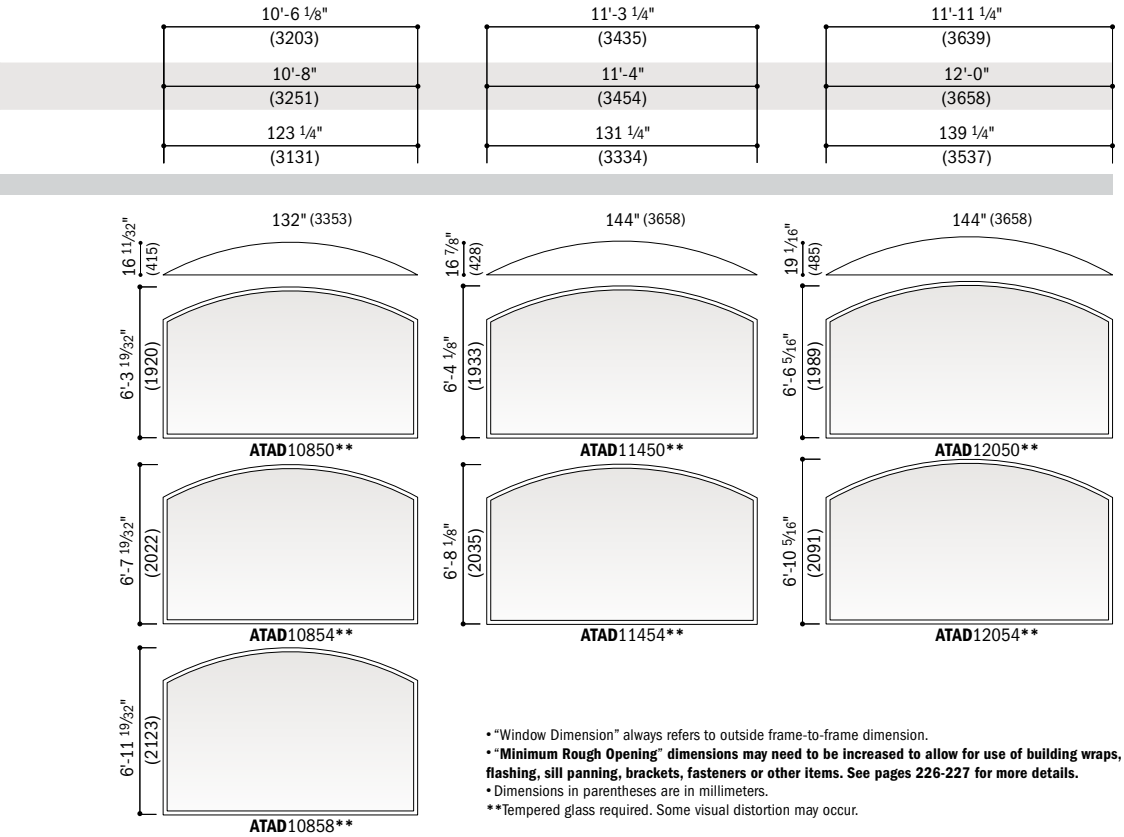

- "Window Dimension" always refers to outside frame-to-frame dimension.
- **"Minimum Rough Opening" dimensions may need to be increased to allow for use of building wraps, flashing, sill panning, brackets, fasteners or other items. See pages 226-227 for more details.**
- Dimensions in parentheses are in millimeters.

**Tempered glass required. Some visual distortion may occur.

Custom-size windows are available in 1/8" (3) increments. Contact your Andersen supplier for more information.

Direct-set arch (ATAD) window sizes shown. Use window dimensions and minimum rough opening formula shown for sash-set arch (**ATA**) window sizes. For sash-set unobstructed glass dimensions, see pages 94-97.

All sizes shown, along with custom sizes, are available with PG upgrade.

Grille patterns shown on page 105. Details shown on page 111.

Sash-Set Arch Window Unobstructed Glass Dimensions and Area Specifications *(continued)*

Window Number	Unobstructed Glass Width Inches/(mm)	Unobstructed Glass Height Inches/(mm)	Glass Area Sq. Ft./(m²)
ATA2710	23 1/2" (596)	7 7/8" (201)	1.17 (0.11)
ATA2720	23 1/2" (596)	19 7/8" (505)	3.13 (0.29)
ATA2724	23 1/2" (596)	23 7/8" (607)	3.78 (0.35)
ATA2728	23 1/2" (596)	27 7/8" (709)	4.43 (0.41)
ATA2730	23 1/2" (596)	31 7/8" (810)	5.08 (0.47)
ATA2810	24 5/8" (625)	8 3/16" (207)	1.26 (0.12)
ATA2820	24 5/8" (625)	20 3/16" (512)	3.31 (0.31)
ATA2824	24 5/8" (625)	24 3/16" (614)	3.99 (0.37)
ATA2828	24 5/8" (625)	28 3/16" (715)	4.68 (0.43)
ATA2830	24 5/8" (625)	32 3/16" (817)	5.36 (0.50)
ATA2834	24 5/8" (625)	36 3/16" (919)	6.04 (0.56)
ATA2838	24 5/8" (625)	40 3/16" (1020)	6.72 (0.62)
ATA2840	24 5/8" (625)	44 3/16" (1122)	7.41 (0.69)
ATA2844	24 5/8" (625)	48 3/16" (1223)	8.09 (0.75)
ATA2848	24 5/8" (625)	52 3/16" (1325)	8.77 (0.82)
ATA2850	24 5/8" (625)	56 3/16" (1427)	9.46 (0.88)
ATA2854	24 5/8" (625)	60 3/16" (1528)	10.14 (0.94)
ATA2858	24 5/8" (625)	64 3/16" (1630)	10.82 (1.01)
ATA2860	24 5/8" (625)	68 3/16" (1731)	11.51 (1.07)
ATA2864	24 5/8" (625)	72 3/16" (1833)	12.19 (1.13)
ATA2868	24 5/8" (625)	76 3/16" (1935)	12.87 (1.20)
ATA2874	24 5/8" (625)	84 3/16" (2138)	14.24 (1.32)
ATA2880	24 5/8" (625)	92 3/16" (2341)	15.61 (1.45)
ATA2910	25 1/2" (647)	8 3/8" (213)	1.33 (0.12)
ATA2920	25 1/2" (647)	20 3/8" (518)	3.45 (0.32)
ATA2924	25 1/2" (647)	24 3/8" (619)	4.16 (0.39)
ATA2928	25 1/2" (647)	28 3/8" (721)	4.87 (0.45)

Window Number	Unobstructed Glass Width Inches/(mm)	Unobstructed Glass Height Inches/(mm)	Glass Area Sq. Ft./(m²)
ATA2930	25 1/2" (647)	32 3/8" (822)	5.58 (0.52)
ATA2910**G**	25 3/4" (653)	8 7/16" (214)	1.35 (0.13)
ATA2920**G**	25 3/4" (653)	20 7/16" (519)	3.50 (0.32)
ATA2924**G**	25 3/4" (653)	24 7/16" (621)	4.21 (0.39)
ATA2928**G**	25 3/4" (653)	28 7/16" (722)	4.92 (0.46)
ATA2930**G**	25 3/4" (653)	32 7/16" (824)	5.64 (0.52)
ATA21010	26 5/8" (675)	8 11/16" (220)	1.43 (0.13)
ATA21020	26 5/8" (675)	20 11/16" (525)	3.65 (0.34)
ATA21024	26 5/8" (675)	24 11/16" (626)	4.38 (0.41)
ATA21028	26 5/8" (675)	28 11/16" (728)	5.12 (0.48)
ATA21030	26 5/8" (675)	32 11/16" (830)	5.86 (0.54)
ATA21034	26 5/8" (675)	36 11/16" (931)	6.60 (0.61)
ATA21038	26 5/8" (675)	40 11/16" (1033)	7.34 (0.68)
ATA21040	26 5/8" (675)	44 11/16" (1134)	8.08 (0.75)
ATA21044	26 5/8" (675)	48 11/16" (1236)	8.82 (0.82)
ATA21048	26 5/8" (675)	52 11/16" (1338)	9.55 (0.89)
ATA21050	26 5/8" (675)	56 11/16" (1439)	10.29 (0.96)
ATA21054	26 5/8" (675)	60 11/16" (1541)	11.03 (1.02)
ATA21058	26 5/8" (675)	64 11/16" (1642)	11.77 (1.09)
ATA21060	26 5/8" (675)	68 11/16" (1744)	12.51 (1.16)
ATA21064	26 5/8" (675)	72 11/16" (1846)	13.25 (1.23)
ATA21068	26 5/8" (675)	76 11/16" (1947)	13.99 (1.30)
ATA21074	26 5/8" (675)	84 11/16" (2150)	15.46 (1.44)
ATA21080	26 5/8" (675)	92 11/16" (2354)	16.94 (1.57)
ATA3010	28 5/8" (726)	9 3/16" (234)	1.61 (0.15)
ATA3020	28 5/8" (726)	21 3/16" (539)	4.00 (0.37)
ATA3024	28 5/8" (726)	25 3/16" (640)	4.79 (0.45)

Window Number	Unobstructed Glass Width Inches/(mm)	Unobstructed Glass Height Inches/(mm)	Glass Area Sq. Ft./(m²)
ATA3028	28 5/8" (726)	29 3/16" (742)	5.59 (0.52)
ATA3030	28 5/8" (726)	33 3/16" (843)	6.38 (0.59)
ATA3034	28 5/8" (726)	37 3/16" (945)	7.17 (0.67)
ATA3038	28 5/8" (726)	41 3/16" (1047)	7.97 (0.74)
ATA3040	28 5/8" (726)	45 3/16" (1148)	8.76 (0.81)
ATA3044	28 5/8" (726)	49 3/16" (1250)	9.56 (0.89)
ATA3048	28 5/8" (726)	53 3/16" (1351)	10.35 (0.96)
ATA3050	28 5/8" (726)	57 3/16" (1453)	11.15 (1.04)
ATA3054	28 5/8" (726)	61 3/16" (1555)	11.94 (1.11)
ATA3058	28 5/8" (726)	65 3/16" (1656)	12.73 (1.18)
ATA3060	28 5/8" (726)	69 3/16" (1758)	13.53 (1.26)
ATA3064	28 5/8" (726)	73 3/16" (1859)	14.32 (1.33)
ATA3068	28 5/8" (726)	77 3/16" (1961)	15.12 (1.40)
ATA3074	28 5/8" (726)	85 3/16" (2164)	16.71 (1.55)
ATA3080	28 5/8" (726)	93 3/16" (2367)	18.29 (1.70)
ATA3110	29 1/2" (749)	9 7/16" (240)	1.70 (0.16)
ATA3120	29 1/2" (749)	21 7/16" (545)	4.16 (0.39)
ATA3124	29 1/2" (749)	25 7/16" (647)	4.97 (0.46)
ATA3128	29 1/2" (749)	29 7/16" (748)	5.79 (0.54)
ATA3130	29 1/2" (749)	33 7/16" (850)	6.61 (0.61)
ATA3210	30 5/8" (777)	8 15/16" (227)	1.68 (0.16)
ATA3220	30 5/8" (777)	20 15/16" (532)	4.23 (0.39)
ATA3224	30 5/8" (777)	24 15/16" (634)	5.08 (0.47)
ATA3228	30 5/8" (777)	28 15/16" (735)	5.93 (0.55)
ATA3230	30 5/8" (777)	32 15/16" (837)	6.78 (0.63)

- Dimensions in parentheses are in millimeters or square meters.

continued on next page

Sash-Set Arch Window Unobstructed Glass Dimensions and Area Specifications *(continued)*

Window Number	Unobstructed Glass Width Inches/(mm)		Unobstructed Glass Height Inches/(mm)		Glass Area Sq. Ft./(m²)	
ATA3234	30 5/8"	(777)	36 15/16"	(939)	7.63	(0.71)
ATA3238	30 5/8"	(777)	40 15/16"	(1040)	8.48	(0.79)
ATA3240	30 5/8"	(777)	44 15/16"	(1142)	9.33	(0.87)
ATA3244	30 5/8"	(777)	48 15/16"	(1243)	10.18	(0.95)
ATA3248	30 5/8"	(777)	52 15/16"	(1345)	11.03	(1.02)
ATA3250	30 5/8"	(777)	56 15/16"	(1447)	11.88	(1.10)
ATA3254	30 5/8"	(777)	60 15/16"	(1548)	12.73	(1.18)
ATA3258	30 5/8"	(777)	64 15/16"	(1650)	13.58	(1.26)
ATA3260	30 5/8"	(777)	68 15/16"	(1751)	14.43	(1.34)
ATA3264	30 5/8"	(777)	72 15/16"	(1853)	15.28	(1.42)
ATA3268	30 5/8"	(777)	76 15/16"	(1955)	16.13	(1.50)
ATA3274	30 5/8"	(777)	84 15/16"	(2158)	17.83	(1.66)
ATA3280	30 5/8"	(777)	92 15/16"	(2361)	19.53	(1.81)
ATA3310	31 1/2"	(799)	9 3/16"	(233)	1.76	(0.16)
ATA3320	31 1/2"	(799)	21 3/16"	(538)	4.39	(0.41)
ATA3324	31 1/2"	(799)	25 3/16"	(639)	5.26	(0.49)
ATA3328	31 1/2"	(799)	29 3/16"	(741)	6.14	(0.57)
ATA3330	31 1/2"	(799)	33 3/16"	(842)	7.01	(0.65)
ATA3310**G**	31 3/4"	(806)	9 1/4"	(235)	1.79	(0.17)
ATA3320**G**	31 3/4"	(806)	21 1/4"	(539)	4.43	(0.41)
ATA3324**G**	31 3/4"	(806)	25 1/4"	(641)	5.31	(0.49)
ATA3328**G**	31 3/4"	(806)	29 1/4"	(743)	6.19	(0.58)
ATA3330**G**	31 3/4"	(806)	33 1/4"	(844)	7.08	(0.66)
ATA3410	32 5/8"	(828)	9 7/16"	(240)	1.88	(0.17)
ATA3420	32 5/8"	(828)	21 7/16"	(545)	4.59	(0.43)
ATA3424	32 5/8"	(828)	25 7/16"	(647)	5.50	(0.51)
ATA3428	32 5/8"	(828)	29 7/16"	(748)	6.40	(0.59)
ATA3430	32 5/8"	(828)	33 7/16"	(850)	7.31	(0.68)
ATA3434	32 5/8"	(828)	37 7/16"	(952)	8.21	(0.76)
ATA3438	32 5/8"	(828)	41 7/16"	(1053)	9.12	(0.85)
ATA3440	32 5/8"	(828)	45 7/16"	(1155)	10.02	(0.93)
ATA3444	32 5/8"	(828)	49 7/16"	(1256)	10.93	(1.02)
ATA3448	32 5/8"	(828)	53 7/16"	(1358)	11.83	(1.10)
ATA3450	32 5/8"	(828)	57 7/16"	(1460)	12.74	(1.18)
ATA3454	32 5/8"	(828)	61 7/16"	(1561)	13.65	(1.27)
ATA3458	32 5/8"	(828)	65 7/16"	(1663)	14.55	(1.35)
ATA3460	32 5/8"	(828)	69 7/16"	(1764)	15.46	(1.44)
ATA3464	32 5/8"	(828)	73 7/16"	(1866)	16.36	(1.52)
ATA3468	32 5/8"	(828)	77 7/16"	(1968)	17.27	(1.60)
ATA3474	32 5/8"	(828)	85 7/16"	(2131)	19.08	(1.77)
ATA3480	32 5/8"	(828)	93 7/16"	(2374)	20.89	(1.94)
ATA3810	36 5/8"	(929)	9 3/4"	(247)	2.15	(0.20)
ATA3820	36 5/8"	(929)	21 3/4"	(552)	5.20	(0.48)
ATA3824	36 5/8"	(929)	25 3/4"	(654)	6.22	(0.58)
ATA3828	36 5/8"	(929)	29 3/4"	(755)	7.23	(0.67)
ATA3830	36 5/8"	(929)	33 3/4"	(857)	8.25	(0.77)
ATA3834	36 5/8"	(929)	37 3/4"	(959)	9.27	(0.86)
ATA3838	36 5/8"	(929)	41 3/4"	(1060)	10.28	(0.96)
ATA3840	36 5/8"	(929)	45 3/4"	(1162)	11.30	(1.05)
ATA3844	36 5/8"	(929)	49 3/4"	(1263)	12.31	(1.14)
ATA3848	36 5/8"	(929)	53 3/4"	(1365)	13.33	(1.24)
ATA3850	36 5/8"	(929)	57 3/4"	(1467)	14.35	(1.33)
ATA3854	36 5/8"	(929)	61 3/4"	(1568)	15.36	(1.43)
ATA3858	36 5/8"	(929)	65 3/4"	(1670)	16.38	(1.52)
ATA3860	36 5/8"	(929)	69 3/4"	(1771)	17.40	(1.62)
ATA3864	36 5/8"	(929)	73 3/4"	(1873)	18.41	(1.71)
ATA3868	36 5/8"	(929)	77 3/4"	(1975)	19.43	(1.81)
ATA3874	36 5/8"	(929)	85 3/4"	(2138)	21.46	(1.99)
ATA3880	36 5/8"	(929)	93 3/4"	(2381)	23.50	(2.18)
ATA3910	37 3/4"	(958)	10"	(255)	2.27	(0.21)
ATA3920	37 3/4"	(958)	22"	(560)	5.41	(0.50)
ATA3924	37 3/4"	(958)	26"	(661)	6.46	(0.60)
ATA3928	37 3/4"	(958)	30"	(763)	7.51	(0.70)
ATA3930	37 3/4"	(958)	34"	(864)	8.56	(0.79)
ATA4010	40 5/8"	(1031)	10 13/16"	(275)	2.60	(0.24)
ATA4020	40 5/8"	(1031)	22 13/16"	(579)	5.98	(0.56)
ATA4024	40 5/8"	(1031)	26 13/16"	(681)	7.11	(0.66)
ATA4028	40 5/8"	(1031)	30 13/16"	(783)	8.24	(0.77)
ATA4030	40 5/8"	(1031)	34 13/16"	(884)	9.37	(0.87)
ATA4034	40 5/8"	(1031)	38 13/16"	(986)	10.49	(0.97)
ATA4038	40 5/8"	(1031)	42 13/16"	(1087)	11.62	(1.08)
ATA4040	40 5/8"	(1031)	46 13/16"	(1189)	12.75	(1.18)
ATA4044	40 5/8"	(1031)	50 13/16"	(1291)	13.88	(1.29)
ATA4048	40 5/8"	(1031)	54 13/16"	(1392)	15.00	(1.39)
ATA4050	40 5/8"	(1031)	58 13/16"	(1494)	16.13	(1.50)
ATA4054	40 5/8"	(1031)	62 13/16"	(1595)	17.26	(1.60)
ATA4058	40 5/8"	(1031)	66 13/16"	(1697)	18.39	(1.71)
ATA4060	40 5/8"	(1031)	70 13/16"	(1799)	19.51	(1.81)
ATA4064	40 5/8"	(1031)	74 13/16"	(1900)	20.64	(1.92)
ATA4068	40 5/8"	(1031)	78 13/16"	(2002)	21.77	(2.02)
ATA4074	40 5/8"	(1031)	86 13/16"	(2205)	24.02	(2.23)
ATA4080	40 5/8"	(1031)	94 13/16"	(2408)	26.28	(2.44)
ATA4310	43 3/4"	(1110)	10 1/8"	(257)	2.64	(0.25)
ATA4320	43 3/4"	(1110)	22 1/8"	(562)	6.28	(0.58)
ATA4324	43 3/4"	(1110)	26 1/8"	(664)	7.50	(0.70)
ATA4328	43 3/4"	(1110)	30 1/8"	(765)	8.71	(0.81)
ATA4330	43 3/4"	(1110)	34 1/8"	(867)	9.93	(0.92)
ATA4410	44 5/8"	(1133)	10 5/16"	(263)	2.74	(0.25)
ATA4420	44 5/8"	(1133)	22 5/16"	(567)	6.45	(0.60)
ATA4424	44 5/8"	(1133)	26 5/16"	(669)	7.69	(0.71)
ATA4428	44 5/8"	(1133)	30 5/16"	(771)	8.93	(0.83)
ATA4430	44 5/8"	(1133)	34 5/16"	(872)	10.17	(0.94)
ATA4434	44 5/8"	(1133)	38 5/16"	(974)	11.41	(1.06)
ATA4438	44 5/8"	(1133)	42 5/16"	(1075)	12.65	(1.18)
ATA4440	44 5/8"	(1133)	46 5/16"	(1177)	13.89	(1.29)
ATA4444	44 5/8"	(1133)	50 5/16"	(1279)	15.13	(1.41)
ATA4448	44 5/8"	(1133)	54 5/16"	(1380)	16.36	(1.52)
ATA4450	44 5/8"	(1133)	58 5/16"	(1482)	17.60	(1.64)
ATA4454	44 5/8"	(1133)	62 5/16"	(1583)	18.84	(1.75)
ATA4458	44 5/8"	(1133)	66 5/16"	(1685)	20.08	(1.87)
ATA4460	44 5/8"	(1133)	70 5/16"	(1787)	21.32	(1.98)
ATA4464	44 5/8"	(1133)	74 5/16"	(1888)	22.56	(2.10)
ATA4468	44 5/8"	(1133)	78 5/16"	(1990)	23.80	(2.21)
ATA4474	44 5/8"	(1133)	86 5/16"	(2193)	26.27	(2.44)
ATA4480	44 5/8"	(1133)	94 5/16"	(2396)	28.75	(2.67)
ATA4810	48 5/8"	(1234)	11 5/16"	(288)	3.22	(0.30)
ATA4820	48 5/8"	(1234)	23 5/16"	(593)	7.27	(0.68)
ATA4824	48 5/8"	(1234)	27 5/16"	(694)	8.62	(0.80)
ATA4828	48 5/8"	(1234)	31 5/16"	(796)	9.97	(0.93)
ATA4830	48 5/8"	(1234)	35 5/16"	(897)	11.32	(1.05)
ATA4834	48 5/8"	(1234)	39 5/16"	(999)	12.67	(1.18)
ATA4838	48 5/8"	(1234)	43 5/16"	(1101)	14.02	(1.30)
ATA4840	48 5/8"	(1234)	47 5/16"	(1202)	15.37	(1.43)
ATA4844	48 5/8"	(1234)	51 5/16"	(1304)	16.72	(1.55)
ATA4848	48 5/8"	(1234)	55 5/16"	(1405)	18.07	(1.68)
ATA4850	48 5/8"	(1234)	59 5/16"	(1507)	19.42	(1.80)
ATA4854	48 5/8"	(1234)	63 5/16"	(1609)	20.77	(1.93)
ATA4858	48 5/8"	(1234)	67 5/16"	(1710)	22.12	(2.05)
ATA4860	48 5/8"	(1234)	71 5/16"	(1812)	23.47	(2.18)
ATA4864	48 5/8"	(1234)	75 5/16"	(1913)	24.82	(2.31)
ATA4868	48 5/8"	(1234)	79 5/16"	(2015)	26.17	(2.43)
ATA4874	48 5/8"	(1234)	87 5/16"	(2218)	28.87	(2.68)
ATA4880	48 5/8"	(1234)	95 5/16"	(2421)	31.57	(2.93)
ATA5010	52 5/8"	(1336)	12 7/16"	(315)	3.77	(0.35)
ATA5020	52 5/8"	(1336)	24 7/16"	(620)	8.15	(0.76)
ATA5024	52 5/8"	(1336)	28 7/16"	(722)	9.61	(0.89)
ATA5028	52 5/8"	(1336)	32 7/16"	(823)	11.07	(1.03)
ATA5030	52 5/8"	(1336)	36 7/16"	(925)	12.53	(1.16)
ATA5034	52 5/8"	(1336)	40 7/16"	(1027)	13.99	(1.30)
ATA5038	52 5/8"	(1336)	44 7/16"	(1128)	15.45	(1.44)
ATA5040	52 5/8"	(1336)	48 7/16"	(1230)	16.92	(1.57)
ATA5044	52 5/8"	(1336)	52 7/16"	(1331)	18.38	(1.71)
ATA5048	52 5/8"	(1336)	56 7/16"	(1433)	19.84	(1.84)
ATA5050	52 5/8"	(1336)	60 7/16"	(1535)	21.30	(1.98)
ATA5054	52 5/8"	(1336)	64 7/16"	(1636)	22.76	(2.11)
ATA5058	52 5/8"	(1336)	68 7/16"	(1738)	24.22	(2.25)
ATA5060	52 5/8"	(1336)	72 7/16"	(1839)	25.68	(2.39)
ATA5064	52 5/8"	(1336)	76 7/16"	(1941)	27.14	(2.52)
ATA5068	52 5/8"	(1336)	80 7/16"	(2043)	28.60	(2.66)
ATA5074	52 5/8"	(1336)	88 7/16"	(2246)	31.52	(2.93)
ATA5080	52 5/8"	(1336)	96 7/16"	(2449)	34.45	(3.20)
ATA5410	56 5/8"	(1437)	11 15/16"	(303)	3.90	(0.36)
ATA5420	56 5/8"	(1437)	23 15/16"	(607)	8.61	(0.80)
ATA5424	56 5/8"	(1437)	27 15/16"	(709)	10.18	(0.95)
ATA5428	56 5/8"	(1437)	31 15/16"	(811)	11.76	(1.09)
ATA5430	56 5/8"	(1437)	35 15/16"	(912)	13.33	(1.24)
ATA5434	56 5/8"	(1437)	39 15/16"	(1014)	14.90	(1.38)
ATA5438	56 5/8"	(1437)	43 15/16"	(1115)	16.47	(1.53)
ATA5440	56 5/8"	(1437)	47 15/16"	(1213)	18.05	(1.68)
ATA5444	56 5/8"	(1437)	51 15/16"	(1319)	19.62	(1.82)
ATA5448	56 5/8"	(1437)	55 15/16"	(1420)	21.19	(1.97)
ATA5450	56 5/8"	(1437)	59 15/16"	(1522)	22.76	(2.11)
ATA5454	56 5/8"	(1437)	63 15/16"	(1623)	24.33	(2.26)
ATA5458	56 5/8"	(1437)	67 15/16"	(1725)	25.91	(2.41)
ATA5460	56 5/8"	(1437)	71 15/16"	(1827)	27.48	(2.55)
ATA5464	56 5/8"	(1437)	75 15/16"	(1928)	29.05	(2.70)
ATA5468	56 5/8"	(1437)	79 15/16"	(2030)	30.62	(2.84)
ATA5474	56 5/8"	(1437)	87 15/16"	(2233)	33.77	(3.14)
ATA5480	56 5/8"	(1437)	95 15/16"	(2436)	36.91	(3.43)
ATA5810	60 5/8"	(1539)	12 15/16"	(328)	4.47	(0.42)
ATA5820	60 5/8"	(1539)	24 15/16"	(633)	9.52	(0.88)
ATA5824	60 5/8"	(1539)	28 15/16"	(735)	11.21	(1.04)
ATA5828	60 5/8"	(1539)	32 15/16"	(836)	12.89	(1.20)
ATA5830	60 5/8"	(1539)	36 15/16"	(938)	14.57	(1.35)
ATA5834	60 5/8"	(1539)	40 15/16"	(1040)	16.26	(1.51)
ATA5838	60 5/8"	(1539)	44 15/16"	(1141)	17.94	(1.67)
ATA5840	60 5/8"	(1539)	48 15/16"	(1243)	19.62	(1.82)
ATA5844	60 5/8"	(1539)	52 15/16"	(1344)	21.30	(1.98)
ATA5848	60 5/8"	(1539)	56 15/16"	(1446)	22.99	(2.14)
ATA5850	60 5/8"	(1539)	60 15/16"	(1548)	24.67	(2.29)
ATA5854	60 5/8"	(1539)	64 15/16"	(1649)	26.35	(2.45)
ATA5858	60 5/8"	(1539)	68 15/16"	(1751)	28.04	(2.60)
ATA5860	60 5/8"	(1539)	72 15/16"	(1852)	29.72	(2.76)
ATA5864	60 5/8"	(1539)	76 15/16"	(1954)	31.40	(2.92)
ATA5868	60 5/8"	(1539)	80 15/16"	(2056)	33.09	(3.07)
ATA5874	60 5/8"	(1539)	88 15/16"	(2259)	36.45	(3.39)
ATA5880	60 5/8"	(1539)	96 15/16"	(2462)	39.82	(3.70)
ATA6010	64 5/8"	(1641)	14"	(356)	5.11	(0.48)
ATA6020	64 5/8"	(1641)	26"	(661)	10.50	(0.98)
ATA6024	64 5/8"	(1641)	30"	(763)	12.29	(1.14)
ATA6028	64 5/8"	(1641)	34"	(864)	14.09	(1.31)
ATA6030	64 5/8"	(1641)	38"	(966)	15.88	(1.48)

• Dimensions in parentheses are in millimeters or square meters.

continued on next page

Sash-Set Arch Window Unobstructed Glass Dimensions and Area Specifications *(continued)*

Window Number	Unobstructed Glass Width Inches/(mm)	Unobstructed Glass Height Inches/(mm)	Glass Area Sq. Ft./(m²)
ATA6034	64 5/8" (1641)	42" (1067)	17.67 (1.64)
ATA6038	64 5/8" (1641)	46" (1169)	19.47 (1.81)
ATA6040	64 5/8" (1641)	50" (1271)	21.26 (1.98)
ATA6044	64 5/8" (1641)	54" (1372)	23.06 (2.14)
ATA6048	64 5/8" (1641)	58" (1474)	24.85 (2.31)
ATA6050	64 5/8" (1641)	62" (1575)	26.65 (2.48)
ATA6054	64 5/8" (1641)	66" (1677)	28.44 (2.64)
ATA6058	64 5/8" (1641)	70" (1779)	30.23 (2.81)
ATA6060	64 5/8" (1641)	74" (1880)	32.03 (2.98)
ATA6064	64 5/8" (1641)	78" (1982)	33.82 (3.14)
ATA6068	64 5/8" (1641)	82" (2083)	35.62 (3.31)
ATA6074	64 5/8" (1641)	90" (2287)	39.21 (3.64)
ATA6080	64 5/8" (1641)	98" (2490)	42.79 (3.98)
ATA6410	68 5/8" (1742)	13 1/2" (343)	5.24 (0.49)
ATA6420	68 5/8" (1742)	25 1/2" (647)	10.95 (1.02)
ATA6424	68 5/8" (1742)	29 1/2" (749)	12.86 (1.19)
ATA6428	68 5/8" (1742)	33 1/2" (851)	14.76 (1.37)
ATA6430	68 5/8" (1742)	37 1/2" (952)	16.67 (1.55)
ATA6434	68 5/8" (1742)	41 1/2" (1054)	18.57 (1.73)
ATA6438	68 5/8" (1742)	45 1/2" (1155)	20.48 (1.90)
ATA6440	68 5/8" (1742)	49 1/2" (1257)	22.38 (2.08)
ATA6444	68 5/8" (1742)	53 1/2" (1359)	24.29 (2.26)
ATA6448	68 5/8" (1742)	57 1/2" (1460)	26.19 (2.43)
ATA6450	68 5/8" (1742)	61 1/2" (1562)	28.10 (2.61)
ATA6454	68 5/8" (1742)	65 1/2" (1663)	30.01 (2.79)
ATA6458	68 5/8" (1742)	69 1/2" (1765)	31.91 (2.96)
ATA6460	68 5/8" (1742)	73 1/2" (1867)	33.82 (3.14)
ATA6464	68 5/8" (1742)	77 1/2" (1968)	35.72 (3.32)
ATA6468	68 5/8" (1742)	81 1/2" (2070)	37.63 (3.50)
ATA6474	68 5/8" (1742)	89 1/2" (2273)	41.44 (3.85)
ATA6480	68 5/8" (1742)	97 1/2" (2476)	45.25 (4.20)
ATA6810	72 5/8" (1844)	14 1/2" (369)	5.91 (0.55)
ATA6820	72 5/8" (1844)	26 1/2" (674)	11.96 (1.11)
ATA6824	72 5/8" (1844)	30 1/2" (775)	13.97 (1.30)
ATA6828	72 5/8" (1844)	34 1/2" (877)	15.99 (1.49)
ATA6830	72 5/8" (1844)	38 1/2" (979)	18.01 (1.67)
ATA6834	72 5/8" (1844)	42 1/2" (1080)	20.02 (1.86)
ATA6838	72 5/8" (1844)	46 1/2" (1182)	22.04 (2.05)
ATA6840	72 5/8" (1844)	50 1/2" (1283)	24.05 (2.23)
ATA6844	72 5/8" (1844)	54 1/2" (1385)	26.07 (2.42)
ATA6848	72 5/8" (1844)	58 1/2" (1487)	28.09 (2.61)
ATA6850	72 5/8" (1844)	62 1/2" (1588)	30.10 (2.80)
ATA6854	72 5/8" (1844)	66 1/2" (1690)	32.12 (2.98)
ATA6858	72 5/8" (1844)	70 1/2" (1791)	34.14 (3.17)
ATA6860	72 5/8" (1844)	74 1/2" (1893)	36.15 (3.36)
ATA6864	72 5/8" (1844)	78 1/2" (1995)	38.17 (3.55)
ATA6868	72 5/8" (1844)	82 1/2" (2096)	40.19 (3.73)
ATA6874	72 5/8" (1844)	90 1/2" (2299)	44.22 (4.11)
ATA6880	72 5/8" (1844)	98 1/2" (2503)	48.25 (4.48)
ATA7010	76 5/8" (1945)	15 5/8" (397)	6.64 (0.62)
ATA7020	76 5/8" (1945)	27 5/8" (702)	13.03 (1.21)
ATA7024	76 5/8" (1945)	31 5/8" (803)	15.15 (1.41)
ATA7028	76 5/8" (1945)	35 5/8" (905)	17.28 (1.61)
ATA7030	76 5/8" (1945)	39 5/8" (1007)	19.41 (1.80)
ATA7034	76 5/8" (1945)	43 5/8" (1108)	21.54 (2.00)
ATA7038	76 5/8" (1945)	47 5/8" (1210)	23.66 (2.20)
ATA7040	76 5/8" (1945)	51 5/8" (1311)	25.79 (2.40)
ATA7044	76 5/8" (1945)	55 5/8" (1413)	27.92 (2.59)
ATA7048	76 5/8" (1945)	59 5/8" (1515)	30.05 (2.79)
ATA7050	76 5/8" (1945)	63 5/8" (1616)	32.18 (2.99)
ATA7054	76 5/8" (1945)	67 5/8" (1718)	34.30 (3.19)

Window Number	Unobstructed Glass Width Inches/(mm)	Unobstructed Glass Height Inches/(mm)	Glass Area Sq. Ft./(m²)
ATA7058	76 5/8" (1945)	71 5/8" (1819)	36.43 (3.38)
ATA7060	76 5/8" (1945)	75 5/8" (1921)	38.56 (3.58)
ATA7064	76 5/8" (1945)	79 5/8" (2023)	40.69 (3.78)
ATA7068	76 5/8" (1945)	83 5/8" (2124)	42.81 (3.98)
ATA7074	76 5/8" (1945)	91 5/8" (2327)	47.07 (4.37)
ATA7080	76 5/8" (1945)	99 5/8" (2531)	51.32 (4.77)
ATA7410	80 5/8" (2047)	15 1/16" (383)	6.76 (0.63)
ATA7420	80 5/8" (2047)	27 1/16" (688)	13.47 (1.25)
ATA7424	80 5/8" (2047)	31 1/16" (789)	15.71 (1.46)
ATA7428	80 5/8" (2047)	35 1/16" (891)	17.95 (1.67)
ATA7430	80 5/8" (2047)	39 1/16" (993)	20.19 (1.88)
ATA7434	80 5/8" (2047)	43 1/16" (1094)	22.43 (2.08)
ATA7438	80 5/8" (2047)	47 1/16" (1196)	24.66 (2.29)
ATA7440	80 5/8" (2047)	51 1/16" (1297)	26.90 (2.50)
ATA7444	80 5/8" (2047)	55 1/16" (1399)	29.14 (2.71)
ATA7448	80 5/8" (2047)	59 1/16" (1501)	31.38 (2.92)
ATA7450	80 5/8" (2047)	63 1/16" (1602)	33.62 (3.12)
ATA7454	80 5/8" (2047)	67 1/16" (1704)	35.86 (3.33)
ATA7458	80 5/8" (2047)	71 1/16" (1805)	38.10 (3.54)
ATA7460	80 5/8" (2047)	75 1/16" (1907)	40.34 (3.75)
ATA71110	87 13/16" (2230)	17" (432)	8.18 (0.76)
ATA71120	87 13/16" (2230)	29" (737)	15.49 (1.44)
ATA71124	87 13/16" (2230)	33" (838)	17.93 (1.67)
ATA71128	87 13/16" (2230)	37" (940)	20.37 (1.89)
ATA71130	87 13/16" (2230)	41" (1042)	22.81 (2.12)
ATA8010	88 5/8" (2250)	17 1/4" (438)	8.35 (0.78)
ATA8020	88 5/8" (2250)	29 1/4" (743)	15.74 (1.46)
ATA8024	88 5/8" (2250)	33 1/4" (844)	18.20 (1.69)
ATA8028	88 5/8" (2250)	37 1/4" (946)	20.66 (1.92)
ATA8030	88 5/8" (2250)	41 1/4" (1047)	23.12 (2.15)
ATA8034	88 5/8" (2250)	45 1/4" (1149)	25.58 (2.38)
ATA8038	88 5/8" (2250)	49 1/4" (1251)	28.04 (2.61)
ATA8040	88 5/8" (2250)	53 1/4" (1352)	30.50 (2.83)
ATA8044	88 5/8" (2250)	57 1/4" (1454)	32.96 (3.06)
ATA8048	88 5/8" (2250)	61 1/4" (1555)	35.42 (3.29)
ATA8050	88 5/8" (2250)	65 1/4" (1657)	37.89 (3.52)
ATA8054	88 5/8" (2250)	69 1/4" (1759)	40.35 (3.75)
ATA8058	88 5/8" (2250)	73 1/4" (1860)	43.81 (3.98)
ATA8060	88 5/8" (2250)	77 1/4" (1962)	45.27 (4.21)
ATA8810	96 5/8" (2453)	16 1/4" (413)	8.61 (0.80)
ATA8820	96 5/8" (2453)	28 1/4" (718)	16.66 (1.55)
ATA8824	96 5/8" (2453)	32 1/4" (820)	19.35 (1.80)
ATA8828	96 5/8" (2453)	36 1/4" (921)	22.03 (2.05)
ATA8830	96 5/8" (2453)	40 1/4" (1023)	24.71 (2.30)
ATA8834	96 5/8" (2453)	44 1/4" (1124)	27.40 (2.55)
ATA8838	96 5/8" (2453)	48 1/4" (1226)	30.08 (2.79)
ATA8840	96 5/8" (2453)	52 1/4" (1328)	32.76 (3.04)
ATA8844	96 5/8" (2453)	56 1/4" (1429)	35.45 (3.29)
ATA8848	96 5/8" (2453)	60 1/4" (1531)	38.13 (3.54)
ATA8850	96 5/8" (2453)	64 1/4" (1632)	40.81 (3.79)
ATA8854	96 5/8" (2453)	68 1/4" (1734)	43.50 (4.04)
ATA8858	96 5/8" (2453)	72 1/4" (1836)	46.18 (4.29)
ATA8860	96 5/8" (2453)	76 1/4" (1937)	48.86 (4.54)
ATA81110	99 13/16" (2534)	17 1/16" (433)	9.27 (0.86)
ATA81120	99 13/16" (2534)	29 1/16" (738)	17.59 (1.63)
ATA81124	99 13/16" (2534)	33 1/16" (839)	20.36 (1.89)
ATA81128	99 13/16" (2534)	37 1/16" (941)	23.13 (2.15)
ATA81130	99 13/16" (2534)	41 1/16" (1042)	25.90 (2.41)
ATA9410	104 5/8" (2657)	18 1/4" (464)	10.34 (0.96)
ATA9420	104 5/8" (2657)	30 1/4" (769)	19.05 (1.77)
ATA9424	104 5/8" (2657)	34 1/4" (870)	21.96 (2.04)

Window Number	Unobstructed Glass Width Inches/(mm)	Unobstructed Glass Height Inches/(mm)	Glass Area Sq. Ft./(m²)
ATA9428	104 5/8" (2657)	38 1/4" (972)	24.86 (2.31)
ATA9430	104 5/8" (2657)	42 1/4" (1074)	27.77 (2.58)
ATA9434	104 5/8" (2657)	46 1/4" (1175)	30.67 (2.85)
ATA9438	104 5/8" (2657)	50 1/4" (1277)	33.58 (3.12)
ATA9440	104 5/8" (2657)	54 1/4" (1378)	36.49 (3.39)
ATA9444	104 5/8" (2657)	58 1/4" (1480)	39.39 (3.66)
ATA9448	104 5/8" (2657)	62 1/4" (1582)	42.30 (3.93)
ATA9450	104 5/8" (2657)	66 1/4" (1683)	45.20 (4.20)
ATA9454	104 5/8" (2657)	70 1/4" (1785)	48.11 (4.47)
ATA9458	104 5/8" (2657)	74 1/4" (1886)	51.01 (4.74)
ATA10010	112 5/8" (2860)	20 7/16" (520)	12.32 (1.14)
ATA10020	112 5/8" (2860)	32 7/16" (824)	21.70 (2.02)
ATA10024	112 5/8" (2860)	36 7/16" (926)	24.83 (2.31)
ATA10028	112 5/8" (2860)	40 7/16" (1028)	27.96 (2.60)
ATA10030	112 5/8" (2860)	44 7/16" (1129)	31.08 (2.89)
ATA10034	112 5/8" (2860)	48 7/16" (1231)	34.21 (3.18)
ATA10038	112 5/8" (2860)	52 7/16" (1332)	37.34 (3.47)
ATA10040	112 5/8" (2860)	56 7/16" (1434)	40.47 (3.76)
ATA10044	112 5/8" (2860)	60 7/16" (1536)	43.59 (4.05)
ATA10048	112 5/8" (2860)	64 7/16" (1637)	46.72 (4.34)
ATA10050	112 5/8" (2860)	68 7/16" (1739)	49.85 (4.63)
ATA10054	112 5/8" (2860)	72 7/16" (1840)	52.98 (4.92)
ATA10058	112 5/8" (2860)	76 7/16" (1942)	56.11 (5.21)
ATA10810	120 5/8" (3063)	20 7/16" (532)	13.45 (1.25)
ATA10820	120 5/8" (3063)	32 7/16" (837)	23.50 (2.18)
ATA10824	120 5/8" (3063)	36 7/16" (938)	26.85 (2.49)
ATA10828	120 5/8" (3063)	40 7/16" (1040)	30.20 (2.81)
ATA10830	120 5/8" (3063)	44 7/16" (1141)	33.55 (3.12)
ATA10834	120 5/8" (3063)	48 7/16" (1243)	36.90 (3.43)
ATA10838	120 5/8" (3063)	52 7/16" (1345)	40.25 (3.74)
ATA10840	120 5/8" (3063)	56 7/16" (1446)	43.60 (4.05)
ATA10844	120 5/8" (3063)	60 7/16" (1548)	46.95 (4.36)
ATA10848	120 5/8" (3063)	64 7/16" (1649)	50.30 (4.67)
ATA10850	120 5/8" (3063)	68 7/16" (1751)	53.65 (4.98)
ATA10854	120 5/8" (3063)	72 7/16" (1853)	57.00 (5.30)
ATA10858	120 5/8" (3063)	76 7/16" (1954)	60.35 (5.61)
ATA11410	128 5/8" (3266)	20 7/16" (545)	14.64 (1.36)
ATA11420	128 5/8" (3266)	32 7/16" (850)	25.36 (2.36)
ATA11424	128 5/8" (3266)	36 7/16" (952)	28.93 (2.69)
ATA11428	128 5/8" (3266)	40 7/16" (1053)	32.50 (3.02)
ATA11430	128 5/8" (3266)	44 7/16" (1155)	36.07 (3.35)
ATA11434	128 5/8" (3266)	48 7/16" (1256)	39.65 (3.68)
ATA11438	128 5/8" (3266)	52 7/16" (1358)	43.22 (4.02)
ATA11440	128 5/8" (3266)	56 7/16" (1460)	46.79 (4.35)
ATA11444	128 5/8" (3266)	60 7/16" (1561)	50.36 (4.68)
ATA11448	128 5/8" (3266)	64 7/16" (1663)	53.94 (5.01)
ATA11450	128 5/8" (3266)	68 7/16" (1764)	57.51 (5.34)
ATA11454	128 5/8" (3266)	72 7/16" (1866)	61.08 (5.67)
ATA12010	136 5/8" (3469)	20 7/16" (601)	17.01 (1.58)
ATA12020	136 5/8" (3469)	32 7/16" (906)	28.39 (2.64)
ATA12024	136 5/8" (3469)	36 7/16" (1008)	32.19 (2.99)
ATA12028	136 5/8" (3469)	40 7/16" (1109)	35.98 (3.34)
ATA12030	136 5/8" (3469)	44 7/16" (1211)	39.77 (3.70)
ATA12034	136 5/8" (3469)	48 7/16" (1312)	43.57 (4.05)
ATA12038	136 5/8" (3469)	52 7/16" (1414)	47.36 (4.40)
ATA12040	136 5/8" (3469)	56 7/16" (1516)	51.16 (4.75)
ATA12044	136 5/8" (3469)	60 7/16" (1617)	54.95 (5.10)
ATA12048	136 5/8" (3469)	64 7/16" (1719)	58.75 (5.46)
ATA12050	136 5/8" (3469)	68 7/16" (1820)	62.54 (5.81)
ATA12054	136 5/8" (3469)	72 7/16" (1922)	66.33 (6.16)

• Dimensions in parentheses are in millimeters or square meters.

Table of Direct-Set Springline™ Window Sizes

Scale ⅛" (3) = 1'-0" (305) – 1:96

Notes on page 106 also apply to this page.

Window Width Dimension	1'-7 ¼" (489)	1'-11 ¼" (591)	2'-3 ¼" (692)	2'-5 ¼" (743)	2'-7 ¼" (794)	2'-9 ¼" (845)	2'-11 ¼" (895)	3'-1 ¼" (946)	3'-3 ¼" (997)
Minimum Rough Opening	1'-8" (508)	2'-0" (610)	2'-4" (711)	2'-6" (762)	2'-8" (813)	2'-10" (864)	3'-0" (914)	3'-2" (965)	3'-4" (1016)
Unobstructed Glass	15 ¼" (387)	19 ¼" (489)	23 ¼" (591)	25 ¼" (641)	27 ¼" (692)	29 ¼" (743)	31 ¼" (794)	33 ¼" (845)	35 ¼" (895)

CUSTOM SIZES AVAILABLE

Window height shown in table

Radius	9 ⅝" (244)	11 ⅝" (295)	13 ⅝" (346)	14 ⅝" (371)	15 ⅝" (397)	16 ⅝" (422)	17 ⅝" (448)	18 ⅝" (473)	19 ⅝" (498)
Chord Height	9 ⅝" (244)	11 ⅝" (295)	13 ⅝" (346)	14 ⅝" (371)	15 ⅝" (397)	16 ⅝" (422)	17 ⅝" (448)	18 ⅝" (473)	19 ⅝" (498)
Shoulder Height 6 ¼" (159)	1'-3 ⅞" (403) **ATSD**1807	1'-5 ⅞" (454) **ATSD**2007	1'-7 ⅞" (505) **ATSD**2407	1'-8 ⅞" (530) **ATSD**2607	1'-9 ⅞" (556) **ATSD**2807	1'-10 ⅞" (581) **ATSD**21007	1'-11 ⅞" (606) **ATSD**3007	2'-0 ⅞" (632) **ATSD**3207	2'-1 ⅞" (657) **ATSD**3407
11 ¼" (286)	1'-8 ⅞" (530) **ATSD**1810	1'-10 ⅞" (581) **ATSD**2010	2'-0 ⅞" (632) **ATSD**2410	2'-1 ⅞" (657) **ATSD**2610	2'-2 ⅞" (683) **ATSD**2810	2'-3 ⅞" (708) **ATSD**21010	2'-4 ⅞" (733) **ATSD**3010	2'-5 ⅞" (759) **ATSD**3210	2'-6 ⅞" (784) **ATSD**3410
23 ¼" (591)	2'-8 ⅞" (835) **ATSD**1820	2'-10 ⅞" (886) **ATSD**2020	3'-0 ⅞" (937) **ATSD**2420	3'-1 ⅞" (962) **ATSD**2620	3'-2 ⅞" (987) **ATSD**2820	3'-3 ⅞" (1013) **ATSD**21020	3'-4 ⅞" (1038) **ATSD**3020	3'-5 ⅞" (1064) **ATSD**3220	3'-6 ⅞" (1089) **ATSD**3420
27 ¼" (692)	3'-0 ⅞" (937) **ATSD**1824	3'-2 ⅞" (987) **ATSD**2024	3'-4 ⅞" (1038) **ATSD**2424	3'-5 ⅞" (1064) **ATSD**2624	3'-6 ⅞" (1089) **ATSD**2824	3'-7 ⅞" (1114) **ATSD**21024	3'-8 ⅞" (1140) **ATSD**3024	3'-9 ⅞" (1165) **ATSD**3224	3'-10 ⅞" (1191) **ATSD**3424
31 ¼" (794)	3'-4 ⅞" (1038) **ATSD**1828	3'-6 ⅞" (1089) **ATSD**2028	3'-8 ⅞" (1140) **ATSD**2428	3'-9 ⅞" (1165) **ATSD**2628	3'-10 ⅞" (1191) **ATSD**2828	3'-11 ⅞" (1216) **ATSD**21028	4'-0 ⅞" (1241) **ATSD**3028	4'-1 ⅞" (1267) **ATSD**3228	4'-2 ⅞" (1292) **ATSD**3428
35 ¼" (895)	3'-8 ⅞" (1140) **ATSD**1830	3'-10 ⅞" (1191) **ATSD**2030	4'-0 ⅞" (1241) **ATSD**2430	4'-1 ⅞" (1267) **ATSD**2630	4'-2 ⅞" (1292) **ATSD**2830	4'-3 ⅞" (1318) **ATSD**21030	4'-4 ⅞" (1343) **ATSD**3030	4'-5 ⅞" (1368) **ATSD**3230	4'-6 ⅞" (1394) **ATSD**3430
39 ¼" (997)	4'-0 ⅞" (1241) **ATSD**1834	4'-2 ⅞" (1292) **ATSD**2034	4'-4 ⅞" (1343) **ATSD**2434	4'-5 ⅞" (1368) **ATSD**2634	4'-6 ⅞" (1394) **ATSD**2834	4'-7 ⅞" (1419) **ATSD**21034	4'-8 ⅞" (1445) **ATSD**3034	4'-9 ⅞" (1470) **ATSD**3234	4'-10 ⅞" (1495) **ATSD**3434
43 ¼" (1099)	4'-4 ⅞" (1343) **ATSD**1838	4'-6 ⅞" (1394) **ATSD**2038	4'-8 ⅞" (1445) **ATSD**2438	4'-9 ⅞" (1470) **ATSD**2638	4'-10 ⅞" (1495) **ATSD**2838	4'-11 ⅞" (1521) **ATSD**21038	5'-0 ⅞" (1546) **ATSD**3038	5'-1 ⅞" (1572) **ATSD**3238	5'-2 ⅞" (1597) **ATSD**3438

Minimum Rough Opening = window height + ¾" (19)

Unobstructed Glass = window height – 4" (102)

CUSTOM SIZES AVAILABLE

- "Window Dimension" always refers to outside frame-to-frame dimension.
- "**Minimum Rough Opening**" **dimensions may need to be increased to allow for use of building wraps, flashing, sill panning, brackets, fasteners or other items. See pages 226-227 for more details.**
- Dimensions in parentheses are in millimeters.

Notes on page 106 also apply to this page.

3'-7 1/4" (1099)	3'-11 1/4" (1200)	4'-3 1/4" (1302)	4'-7 1/4" (1403)	4'-11 1/4" (1505)	5'-3 1/4" (1607)	5'-7 1/4" (1708)	5'-11 1/4" (1810)
3'-8" (1118)	4'-0" (1219)	4'-4" (1321)	4'-8" (1422)	5'-0" (1524)	5'-4" (1626)	5'-8" (1727)	6'-0" (1829)
39 1/4" (997)	43 1/4" (1099)	47 1/4" (1200)	51 1/4" (1302)	55 1/4" (1403)	59 1/4" (1505)	63 1/4" (1607)	67 1/4" (1708)
21 5/8" (549)	23 5/8" (600)	25 5/8" (651)	27 5/8" (702)	29 5/8" (752)	31 5/8" (803)	33 5/8" (854)	35 5/8" (905)
2'-3 7/8" (708) **ATSD**3807	2'-5 7/8" (759) **ATSD**4007	2'-7 7/8" (810) **ATSD**4407	2'-9 7/8" (860) **ATSD**4807	2'-11 7/8" (911) **ATSD**5007	3'-1 7/8" (962) **ATSD**5407	3'-3 7/8" (1013) **ATSD**5807	3'-5 7/8" (1064) **ATSD**6007
2'-8 7/8" (835) **ATSD**3810	2'-10 7/8" (886) **ATSD**4010	3'-0 7/8" (937) **ATSD**4410	3'-2 7/8" (987) **ATSD**4810	3'-4 7/8" (1038) **ATSD**5010	3'-6 7/8" (1089) **ATSD**5410	3'-8 7/8" (1140) **ATSD**5810	3'-10 7/8" (1191) **ATSD**6010
3'-8 7/8" (1140) **ATSD**3820	3'-10 7/8" (1191) **ATSD**4020	4'-0 7/8" (1241) **ATSD**4420	4'-2 7/8" (1292) **ATSD**4820	4'-4 7/8" (1343) **ATSD**5020	4'-6 7/8" (1394) **ATSD**5420	4'-8 7/8" (1445) **ATSD**5820	4'-10 7/8" (1495) **ATSD**6020
4'-0 7/8" (1241) **ATSD**3824	4'-2 7/8" (1292) **ATSD**4024	4'-4 7/8" (1343) **ATSD**4424	4'-6 7/8" (1394) **ATSD**4824	4'-8 7/8" (1445) **ATSD**5024	4'-10 7/8" (1495) **ATSD**5424	5'-0 7/8" (1546) **ATSD**5824	5'-2 7/8" (1597) **ATSD**6024
4'-4 7/8" (1343) **ATSD**3828	4'-6 7/8" (1394) **ATSD**4028*	4'-8 7/8" (1445) **ATSD**4428*	4'-10 7/8" (1495) **ATSD**4828*	5'-0 7/8" (1546) **ATSD**5028	5'-2 7/8" (1597) **ATSD**5428	5'-4 7/8" (1648) **ATSD**5828	5'-6 7/8" (1699) **ATSD**6028
4'-8 7/8" (1445) **ATSD**3830	4'-10 7/8" (1495) **ATSD**4030	5'-0 7/8" (1546) **ATSD**4430	5'-2 7/8" (1597) **ATSD**4830	5'-4 7/8" (1648) **ATSD**5030	5'-6 7/8" (1699) **ATSD**5430	5'-8 7/8" (1749) **ATSD**5830	5'-10 7/8" (1800) **ATSD**6030
5'-0 7/8" (1546) **ATSD**3834	5'-2 7/8" (1597) **ATSD**4034	5'-4 7/8" (1648) **ATSD**4434	5'-6 7/8" (1699) **ATSD**4834	5'-8 7/8" (1749) **ATSD**5034	5'-10 7/8" (1800) **ATSD**5434	6'-0 7/8" (1851) **ATSD**5834	6'-2 7/8" (1902) **ATSD**6034
5'-4 7/8" (1648) **ATSD**3838	5'-6 7/8" (1699) **ATSD**4038	5'-8 7/8" (1749) **ATSD**4438	5'-10 7/8" (1800) **ATSD**4838	6'-0 7/8" (1851) **ATSD**5038	6'-2 7/8" (1902) **ATSD**5438	6'-4 7/8" (1953) **ATSD**5838	6'-6 7/8" (2003) **ATSD**6038

continued on next page

- "Window Dimension" always refers to outside frame-to-frame dimension.
- "**Minimum Rough Opening**" **dimensions may need to be increased to allow for use of building wraps, flashing, sill panning, brackets, fasteners or other items. See pages 226-227 for more details.**
- Dimensions in parentheses are in millimeters.

Table of Direct-Set Springline™ Window Sizes *(continued)*

Notes on page 106 also apply to this page.

Scale ⅛" (3) = 1'-0" (305) – 1:96

Window Width Dimension	1'-7 ¼" (489)	1'-11 ¼" (591)	2'-3 ¼" (692)	2'-5 ¼" (743)	2'-7 ¼" (794)	2'-9 ¼" (845)	2'-11 ¼" (895)	3'-1 ¼" (946)	3'-3 ¼" (997)
Minimum Rough Opening	1'-8" (508)	2'-0" (610)	2'-4" (711)	2'-6" (762)	2'-8" (813)	2'-10" (864)	3'-0" (914)	3'-2" (965)	3'-4" (1016)
Unobstructed Glass	15 ¼" (387)	19 ¼" (489)	23 ¼" (591)	25 ¼" (641)	27 ¼" (692)	29 ¼" (743)	31 ¼" (794)	33 ¼" (845)	35 ¼" (895)

CUSTOM SIZES AVAILABLE

Window height shown in table

Radius	9 ⅝" (244)	11 ⅝" (295)	13 ⅝" (346)	14 ⅝" (371)	15 ⅝" (397)	16 ⅝" (422)	17 ⅝" (448)	18 ⅝" (473)	19 ⅝" (498)
Chord Height	9 ⅝" (244)	11 ⅝" (295)	13 ⅝" (346)	14 ⅝" (371)	15 ⅝" (397)	16 ⅝" (422)	17 ⅝" (448)	18 ⅝" (473)	19 ⅝" (498)

Minimum Rough Opening = window height + ¾" (19)

Unobstructed Glass = window height – 4" (102)

CUSTOM SIZES AVAILABLE

Shoulder Height									
47 ¼" (1200)	4'-8 ⅞" (1445)	4'-10 ⅞" (1495)	5'-0 ⅞" (1546)	5'-1 ⅞" (1572)	5'-2 ⅞" (1597)	5'-3 ⅞" (1622)	5'-4 ⅞" (1648)	5'-5 ⅞" (1673)	5'-6 ⅞" (1699)
	ATSD1840	**ATSD**2040	**ATSD**2440	**ATSD**2640	**ATSD**2840	**ATSD**21040	**ATSD**3040	**ATSD**3240	**ATSD**3440
51 ¼" (1302)	5'-0 ⅞" (1546)	5'-2 ⅞" (1597)	5'-4 ⅞" (1648)	5'-5 ⅞" (1673)	5'-6 ⅞" (1699)	5'-7 ⅞" (1724)	5'-8 ⅞" (1749)	5'-9 ⅞" (1775)	5'-10 ⅞" (1800)
	ATSD1844	**ATSD**2044	**ATSD**2444	**ATSD**2644	**ATSD**2844	**ATSD**21044	**ATSD**3044	**ATSD**3244	**ATSD**3444
55 ¼" (1403)	5'-4 ⅞" (1648)	5'-6 ⅞" (1699)	5'-8 ⅞" (1749)	5'-9 ⅞" (1775)	5'-10 ⅞" (1800)	5'-11 ⅞" (1826)	6'-0 ⅞" (1851)	6'-1 ⅞" (1876)	6'-2 ⅞" (1902)
	ATSD1848	**ATSD**2048	**ATSD**2448	**ATSD**2648	**ATSD**2848	**ATSD**21048	**ATSD**3048	**ATSD**3248	**ATSD**3448
59 ¼" (1505)	5'-8 ⅞" (1749)	5'-10 ⅞" (1800)	6'-0 ⅞" (1851)	6'-1 ⅞" (1876)	6'-2 ⅞" (1902)	6'-3 ⅞" (1927)	6'-4 ⅞" (1953)	6'-5 ⅞" (1978)	6'-6 ⅞" (2003)
	ATSD1850	**ATSD**2050	**ATSD**2450	**ATSD**2650	**ATSD**2850	**ATSD**21050	**ATSD**3050	**ATSD**3250	**ATSD**3450
63 ¼" (1607)	6'-0 ⅞" (1851)	6'-2 ⅞" (1902)	6'-4 ⅞" (1953)	6'-5 ⅞" (1978)	6'-6 ⅞" (2003)	6'-7 ⅞" (2029)	6'-8 ⅞" (2054)	6'-9 ⅞" (2080)	6'-10 ⅞" (2105)
	ATSD1854	**ATSD**2054	**ATSD**2454	**ATSD**2654	**ATSD**2854	**ATSD**21054	**ATSD**3054	**ATSD**3254	**ATSD**3454
67 ¼" (1708)	6'-4 ⅞" (1953)	6'-6 ⅞" (2003)	6'-8 ⅞" (2054)	6'-9 ⅞" (2080)	6'-10 ⅞" (2105)	6'-11 ⅞" (2130)	7'-0 ⅞" (2156)	7'-1 ⅞" (2181)	7'-2 ⅞" (2207)
	ATSD1858	**ATSD**2058	**ATSD**2458	**ATSD**2658	**ATSD**2858	**ATSD**21058	**ATSD**3058	**ATSD**3258	**ATSD**3458

- "Window Dimension" always refers to outside frame-to-frame dimension.
- "**Minimum Rough Opening**" **dimensions may need to be increased to allow for use of building wraps, flashing, sill panning, brackets, fasteners or other items. See pages 226-227 for more details.**
- Dimensions in parentheses are in millimeters.

Notes on page 106 also apply to this page.

3'-7 1/4" (1099)	3'-11 1/4" (1200)	4'-3 1/4" (1302)	4'-7 1/4" (1403)	4'-11 1/4" (1505)	5'-3 1/4" (1607)	5'-7 1/4" (1708)	5'-11 1/4" (1810)
3'-8" (1118)	4'-0" (1219)	4'-4" (1321)	4'-8" (1422)	5'-0" (1524)	5'-4" (1626)	5'-8" (1727)	6'-0" (1829)
39 1/4" (997)	43 1/4" (1099)	47 1/4" (1200)	51 1/4" (1302)	55 1/4" (1403)	59 1/4" (1505)	63 1/4" (1607)	67 1/4" (1708)

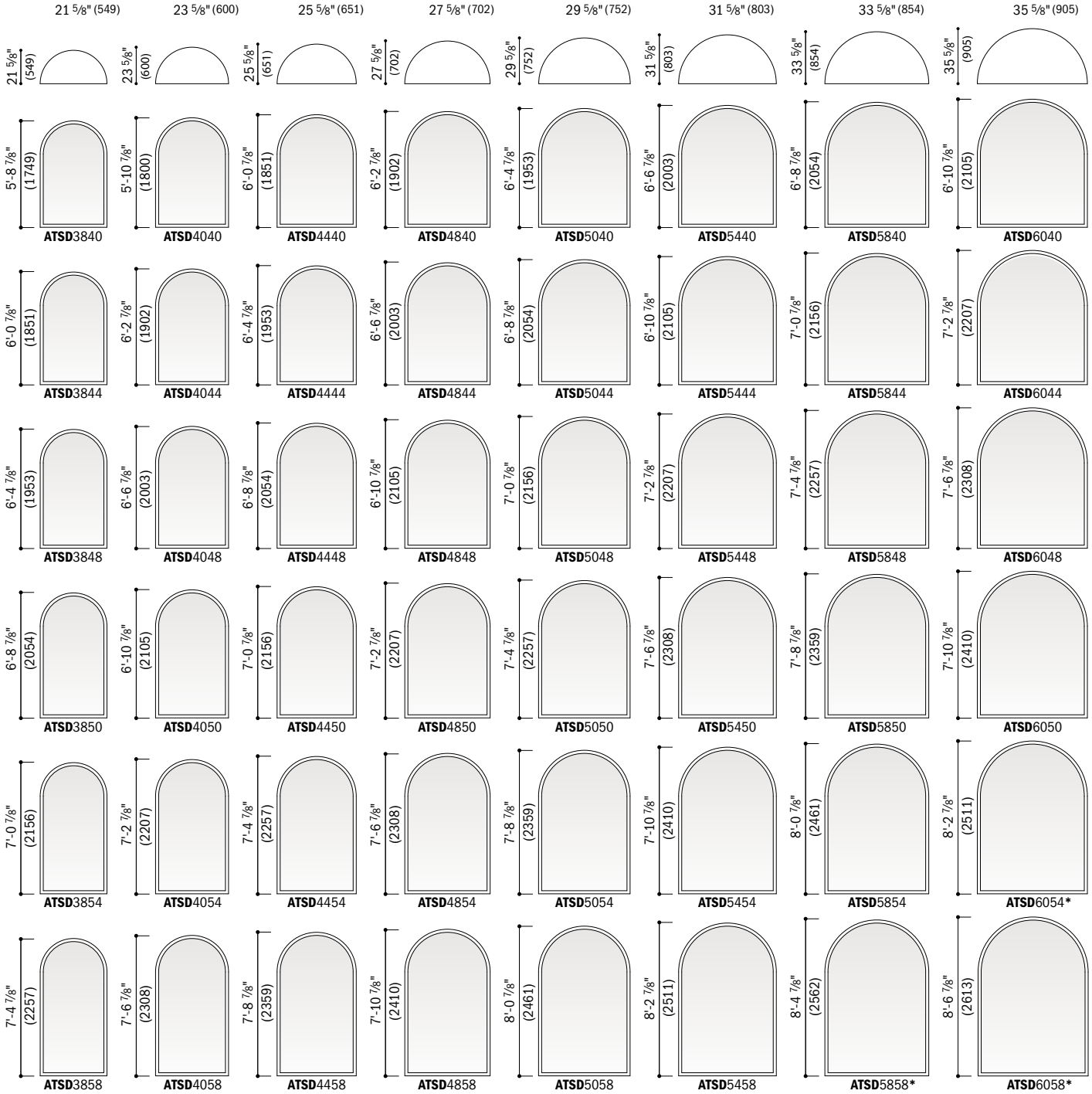

continued on next page

- "Window Dimension" always refers to outside frame-to-frame dimension.
- "**Minimum Rough Opening**" **dimensions may need to be increased to allow for use of building wraps, flashing, sill panning, brackets, fasteners or other items. See pages 226-227 for more details.**
- Dimensions in parentheses are in millimeters.

*Tempered glass required. Some visual distortion may occur.

Table of Direct-Set Springline™ Window Sizes *(continued)*

Notes on page 106 also apply to this page.

Scale ⅛" (3) = 1'-0" (305) – 1:96

Window Width Dimension	1'-7 ¼" (489)	1'-11 ¼" (591)	2'-3 ¼" (692)	2'-5 ¼" (743)	2'-7 ¼" (794)	2'-9 ¼" (845)	2'-11 ¼" (895)	3'-1 ¼" (946)	3'-3 ¼" (997)
Minimum Rough Opening	1'-8" (508)	2'-0" (610)	2'-4" (711)	2'-6" (762)	2'-8" (813)	2'-10" (864)	3'-0" (914)	3'-2" (965)	3'-4" (1016)
Unobstructed Glass	15 ¼" (387)	19 ¼" (489)	23 ¼" (591)	25 ¼" (641)	27 ¼" (692)	29 ¼" (743)	31 ¼" (794)	33 ¼" (845)	35 ¼" (895)

CUSTOM SIZES AVAILABLE

Window height shown in table

Radius	9 ⅝" (244)	11 ⅝" (295)	13 ⅝" (346)	14 ⅝" (371)	15 ⅝" (397)	16 ⅝" (422)	17 ⅝" (448)	18 ⅝" (473)	19 ⅝" (498)
Chord Height	9 ⅝" (244)	11 ⅝" (295)	13 ⅝" (346)	14 ⅝" (371)	15 ⅝" (397)	16 ⅝" (422)	17 ⅝" (448)	18 ⅝" (473)	19 ⅝" (498)

Minimum Rough Opening = window height + ¾" (19)

Unobstructed Glass = window height – 4" (102)

CUSTOM SIZES AVAILABLE

Shoulder Height

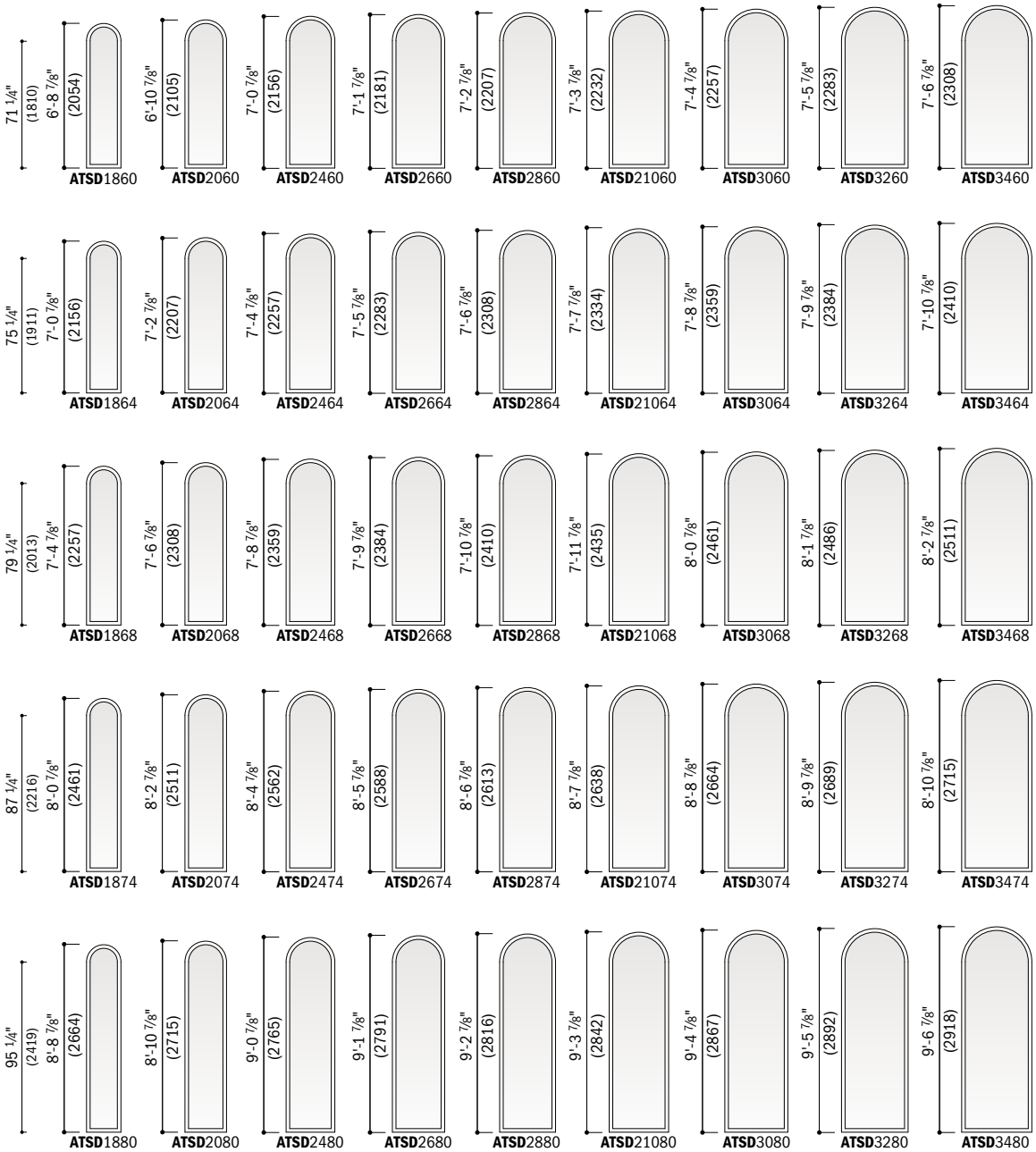

- "Window Dimension" always refers to outside frame-to-frame dimension.
- "**Minimum Rough Opening**" **dimensions may need to be increased to allow for use of building wraps, flashing, sill panning, brackets, fasteners or other items. See pages 226-227 for more details.**
- Dimensions in parentheses are in millimeters.

Notes on page 106 also apply to this page.

3'-7 1/4" (1099)	3'-11 1/4" (1200)	4'-3 1/4" (1302)	4'-7 1/4" (1403)	4'-11 1/4" (1505)	5'-3 1/4" (1607)	5'-7 1/4" (1708)	5'-11 1/4" (1810)
3'-8" (1118)	4'-0" (1219)	4'-4" (1321)	4'-8" (1422)	5'-0" (1524)	5'-4" (1626)	5'-8" (1727)	6'-0" (1829)
39 1/4" (997)	43 1/4" (1099)	47 1/4" (1200)	51 1/4" (1302)	55 1/4" (1403)	59 1/4" (1505)	63 1/4" (1607)	67 1/4" (1708)
21 5/8" (549)	23 5/8" (600)	25 5/8" (651)	27 5/8" (702)	29 5/8" (752)	31 5/8" (803)	33 5/8" (854)	35 5/8" (905)
7'-8 7/8" (2359)	7'-10 7/8" (2410)	8'-0 7/8" (2461)	8'-2 7/8" (2511)	8'-4 7/8" (2562)	8'-6 7/8" (2613)	8'-8 7/8" (2664)	8'-10 7/8" (2715)
ATSD3860	**ATSD**4060	**ATSD**4460	**ATSD**4860	**ATSD**5060	**ATSD**5460*	**ATSD**5860*	**ATSD**6060*
8'-0 7/8" (2461)	8'-2 7/8" (2511)	8'-4 7/8" (2562)	8'-6 7/8" (2613)	8'-8 7/8" (2664)	8'-10 7/8" (2715)	9'-0 7/8" (2765)	9'-2 7/8" (2816)
ATSD3864	**ATSD**4064	**ATSD**4464	**ATSD**4864	**ATSD**5064*	**ATSD**5464*	**ATSD**5864*	**ATSD**6064*
8'-4 7/8" (2562)	8'-6 7/8" (2613)	8'-8 7/8" (2664)	8'-10 7/8" (2715)	9'-0 7/8" (2765)	9'-2 7/8" (2816)	9'-4 7/8" (2867)	9'-6 7/8" (2918)
ATSD3868	**ATSD**4068	**ATSD**4468*	**ATSD**4868*	**ATSD**5068*	**ATSD**5468*	**ATSD**5868*	**ATSD**6068*
9'-0 7/8" (2765)	9'-2 7/8" (2816)	9'-4 7/8" (2867)	9'-6 7/8" (2918)	9'-8 7/8" (2969)	9'-10 7/8" (3019)	10'-0 7/8" (3070)	10'-2 7/8" (3121)
ATSD3874	**ATSD**4074*	**ATSD**4474*	**ATSD**4874*	**ATSD**5074*	**ATSD**5474*	**ATSD**5874*	**ATSD**6074*
9'-8 7/8" (2969)	9'-10 7/8" (3019)	10'-0 7/8" (3070)	10'-2 7/8" (3121)	10'-4 7/8" (3172)	10'-6 7/8" (3223)	10'-8 7/8" (3273)	10'-10 7/8" (3324)
ATSD3880*	**ATSD**4080*	**ATSD**4480*	**ATSD**4880*	**ATSD**5080*	**ATSD**5480*	**ATSD**5880*	**ATSD**6080*

continued on next page

- "Window Dimension" always refers to outside frame-to-frame dimension.
- "**Minimum Rough Opening**" **dimensions may need to be increased to allow for use of building wraps, flashing, sill panning, brackets, fasteners or other items. See pages 226-227 for more details.**
- Dimensions in parentheses are in millimeters.

*Tempered glass required. Some visual distortion may occur.

Table of Direct-Set Springline™ Window Sizes *(continued)*

Scale 1/8" (3) = 1'-0" (305) – 1:96

Notes on page 106 also apply to this page.

Window Width Dimension	6'-3 1/4" (1911)	6'-7 1/4" (2013)	6'-11 1/4" (2115)	7'-3 1/4" (2216)	7'-11 1/4" (2419)
Minimum Rough Opening	6'-4" (1930)	6'-8" (2032)	7'-0" (2134)	7'-4" (2235)	8'-0" (2438)
Unobstructed Glass	71 1/4" (1810)	75 1/4" (1911)	79 1/4" (2013)	83 1/4" (2115)	91 1/4" (2318)

CUSTOM SIZES AVAILABLE

Window height shown in table

Minimum Rough Opening = window height + 3/4" (19)

Unobstructed Glass = window height – 4" (102)

CUSTOM SIZES AVAILABLE

Radius	37 5/8" (956)	39 5/8" (1006)	41 5/8" (1057)	43 5/8" (1108)	47 5/8" (1210)
Chord Height	37 5/8" (956)	39 5/8" (1006)	**41 5/8" (1057)**	43 5/8" (1108)	47 5/8" (1210)
Shoulder Height 6 1/4" (159)	3'-7 7/8" (1114) **ATSD**6407	3'-9 7/8" (1165) **ATSD**6807	3'-11 7/8" (1216) **ATSD**7007	4'-1 7/8" (1267) **ATSD**7407	4'-5 7/8" (1368) **ATSD**8007
11 1/4" (286)	4'-0 7/8" (1241) **ATSD**6410	4'-2 7/8" (1292) **ATSD**6810	4'-4 7/8" (1343) **ATSD**7010	4'-6 7/8" (1394) **ATSD**7410	4'-10 7/8" (1495) **ATSD**8010
23 1/4" (591)	5'-0 7/8" (1546) **ATSD**6420	5'-2 7/8" (1597) **ATSD**6820	5'-4 7/8" (1648) **ATSD**7020	5'-6 7/8" (1699) **ATSD**7420	5'-10 7/8" (1800) **ATSD**8020*
27 1/4" (692)	5'-4 7/8" (1648) **ATSD**6424	5'-6 7/8" (1699) **ATSD**6824	5'-8 7/8" (1749) **ATSD**7024	5'-10 7/8" (1800) **ATSD**7424	6'-2 7/8" (1902) **ATSD**8024*
31 1/4" (794)	5'-8 7/8" (1749) **ATSD**6428	5'-10 7/8" (1800) **ATSD**6828	6'-0 7/8" (1851) **ATSD**7028	6'-2 7/8" (1902) **ATSD**7428	6'-6 7/8" (2003) **ATSD**8028*
35 1/4" (895)	6'-0 7/8" (1851) **ATSD**6430	6'-2 7/8" (1902) **ATSD**6830	6'-4 7/8" (1953) **ATSD**7030	6'-6 7/8" (2003) **ATSD**7430*	6'-10 7/8" (2105) **ATSD**8030*
39 1/4" (997)	6'-4 7/8" (1953) **ATSD**6434	6'-6 7/8" (2003) **ATSD**6834	6'-8 7/8" (2054) **ATSD**7034	6'-10 7/8" (2105) **ATSD**7434*	
43 1/4" (1099)	6'-8 7/8" (2054) **ATSD**6438	6'-10 7/8" (2105) **ATSD**6838	7'-0 7/8" (2156) **ATSD**7038*		

continued on page 106

- "Window Dimension" always refers to outside frame-to-frame dimension.
- "**Minimum Rough Opening**" **dimensions may need to be increased to allow for use of building wraps, flashing, sill panning, brackets, fasteners or other items. See pages 226-227 for more details.**
- Dimensions in parentheses are in millimeters.

*Tempered glass required. Some visual distortion may occur.

Grille Patterns

	Colonial	Renaissance	Sunburst
Arch	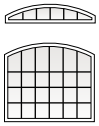		
Springline™	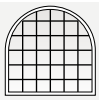	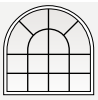	

Number of lights and overall pattern varies with window size. Patterns may not be available in all configurations or sizes. Specified equal light and custom patterns are also available. For more grille options, see page 19 or visit **andersenwindows.com/grilles**.

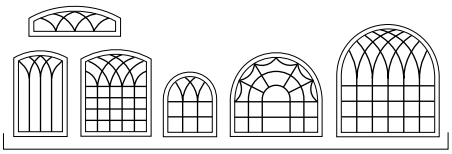

Custom Examples

Direct-Set Springline™ Window Area Specifications

Window Number	Glass Area Sq. Ft./(m²)
ATSD1807	1.08 (0.10)
ATSD1810	1.61 (0.15)
ATSD1820	2.88 (0.27)
ATSD1824	3.31 (0.31)
ATSD1828	3.73 (0.35)
ATSD1830	4.16 (0.39)
ATSD1834	4.58 (0.43)
ATSD1838	5.00 (0.46)
ATSD1840	5.43 (0.50)
ATSD1844	5.85 (0.54)
ATSD1848	6.27 (0.58)
ATSD1850	6.70 (0.62)
ATSD1854	7.12 (0.66)
ATSD1858	7.54 (0.70)
ATSD1860	7.97 (0.74)
ATSD1864	8.39 (0.78)
ATSD1868	8.82 (0.82)
ATSD1874	9.66 (0.90)
ATSD1880	10.51 (0.98)
ATSD2007	1.58 (0.15)
ATSD2010	2.25 (0.21)
ATSD2020	3.85 (0.36)
ATSD2024	4.39 (0.41)
ATSD2028	4.92 (0.46)
ATSD2030	5.46 (0.51)
ATSD2034	5.99 (0.56)
ATSD2038	6.52 (0.61)
ATSD2040	7.06 (0.66)
ATSD2044	7.59 (0.71)
ATSD2048	8.13 (0.76)
ATSD2050	8.66 (0.80)
ATSD2054	9.20 (0.85)
ATSD2058	9.73 (0.90)
ATSD2060	10.27 (0.95)
ATSD2064	10.80 (1.00)
ATSD2068	11.34 (1.05)
ATSD2074	12.41 (1.15)
ATSD2080	13.48 (1.25)
ATSD2407	2.16 (0.20)

Window Number	Glass Area Sq. Ft./(m²)
ATSD2410	2.97 (0.28)
ATSD2420	4.91 (0.46)
ATSD2424	5.55 (0.52)
ATSD2428	6.20 (0.58)
ATSD2430	6.84 (0.64)
ATSD2434	7.49 (0.70)
ATSD2438	8.13 (0.76)
ATSD2440	8.78 (0.82)
ATSD2444	9.43 (0.88)
ATSD2448	10.07 (0.94)
ATSD2450	10.72 (1.00)
ATSD2454	11.36 (1.06)
ATSD2458	12.01 (1.12)
ATSD2460	12.66 (1.18)
ATSD2464	13.30 (1.24)
ATSD2468	13.95 (1.30)
ATSD2474	15.24 (1.42)
ATSD2480	16.53 (1.54)
ATSD2607	2.48 (0.23)
ATSD2610	3.36 (0.31)
ATSD2620	5.46 (0.51)
ATSD2624	6.17 (0.57)
ATSD2628	6.87 (0.64)
ATSD2630	7.57 (0.70)
ATSD2634	8.27 (0.77)
ATSD2638	8.97 (0.83)
ATSD2640	9.67 (0.90)
ATSD2644	10.37 (0.96)
ATSD2648	11.08 (1.03)
ATSD2650	11.78 (1.09)
ATSD2654	12.48 (1.16)
ATSD2658	13.18 (1.22)
ATSD2660	13.88 (1.29)
ATSD2664	14.58 (1.35)
ATSD2668	15.28 (1.42)
ATSD2674	16.69 (1.55)
ATSD2680	18.09 (1.68)
ATSD2807	2.83 (0.26)
ATSD2810	3.78 (0.35)

Window Number	Glass Area Sq. Ft./(m²)
ATSD2820	6.05 (0.56)
ATSD2824	6.80 (0.63)
ATSD2828	7.56 (0.70)
ATSD2830	8.32 (0.77)
ATSD2834	9.07 (0.84)
ATSD2838	9.83 (0.91)
ATSD2840	10.59 (0.98)
ATSD2844	11.34 (1.05)
ATSD2848	12.10 (1.12)
ATSD2850	12.86 (1.19)
ATSD2854	13.62 (1.26)
ATSD2858	14.37 (1.34)
ATSD2860	15.13 (1.41)
ATSD2864	15.89 (1.48)
ATSD2868	16.64 (1.55)
ATSD2874	18.16 (1.69)
ATSD2880	19.67 (1.83)
ATSD21007	3.20 (0.30)
ATSD21010	4.21 (0.39)
ATSD21020	6.65 (0.62)
ATSD21024	7.46 (0.69)
ATSD21028	8.27 (0.77)
ATSD21030	9.09 (0.84)
ATSD21034	9.90 (0.92)
ATSD21038	10.71 (1.00)
ATSD21040	11.52 (1.07)
ATSD21044	12.34 (1.15)
ATSD21048	13.15 (1.22)
ATSD21050	13.96 (1.30)
ATSD21054	14.77 (1.37)
ATSD21058	15.59 (1.45)
ATSD21060	16.40 (1.52)
ATSD21064	17.21 (1.60)
ATSD21068	18.02 (1.67)
ATSD21074	19.65 (1.83)
ATSD21080	21.27 (1.98)
ATSD3007	3.59 (0.33)
ATSD3010	4.67 (0.43)
ATSD3020	7.27 (0.68)

Window Number	Glass Area Sq. Ft./(m²)
ATSD3024	8.14 (0.76)
ATSD3028	9.01 (0.84)
ATSD3030	9.88 (0.92)
ATSD3034	10.75 (1.00)
ATSD3038	11.61 (1.08)
ATSD3040	12.48 (1.16)
ATSD3044	13.35 (1.24)
ATSD3048	14.22 (1.32)
ATSD3050	15.09 (1.40)
ATSD3054	15.96 (1.48)
ATSD3058	16.82 (1.56)
ATSD3060	17.69 (1.64)
ATSD3064	18.56 (1.72)
ATSD3068	19.43 (1.80)
ATSD3074	21.16 (1.97)
ATSD3080	22.90 (2.13)
ATSD3207	4.00 (0.37)
ATSD3210	5.15 (0.48)
ATSD3220	7.92 (0.74)
ATSD3224	8.85 (0.82)
ATSD3228	9.77 (0.91)
ATSD3230	10.69 (0.99)
ATSD3234	11.62 (1.08)
ATSD3238	12.54 (1.16)
ATSD3240	13.46 (1.25)
ATSD3244	14.39 (1.34)
ATSD3248	15.31 (1.42)
ATSD3250	16.23 (1.51)
ATSD3254	17.16 (1.59)
ATSD3258	18.08 (1.68)
ATSD3260	19.00 (1.77)
ATSD3264	19.93 (1.85)
ATSD3268	20.85 (1.94)
ATSD3274	22.70 (2.11)
ATSD3280	24.55 (2.28)
ATSD3407	4.43 (0.41)
ATSD3410	5.65 (0.53)
ATSD3420	8.59 (0.80)

• Dimensions in parentheses are in square meters.

continued on page 107

Table of Direct-Set Springline™ Window Sizes *(continued from page 104)*

Scale 1/8" (3) = 1'-0" (305) – 1:96

Window Width Dimension	6'-3 1/4" (1911)	6'-7 1/4" (2013)	6'-11 1/4" (2115)
Minimum Rough Opening	6'-4" (1930)	6'-8" (2032)	7'-0" (2134)
Unobstructed Glass	71 1/4" (1810)	75 1/4" (1911)	79 1/4" (2013)

CUSTOM SIZES AVAILABLE

Window height shown in table

Minimum Rough Opening = window height + 3/4" (19)

Unobstructed Glass = window height – 4" (102)

CUSTOM SIZES AVAILABLE

Radius	37 5/8" (956)	39 5/8" (1006)	41 5/8" (1057)
Chord Height	37 5/8" (956)	39 5/8" (1006)	41 5/8" (1057)
Shoulder Height 47 1/4" (1200)	7'-0 7/8" (2156) **ATSD**6440	7'-2 7/8" (2207) **ATSD**6840*	7'-4 7/8" (2257) **ATSD**7040*
51 1/4" (1302)	7'-4 7/8" (2257) **ATSD**6444	7'-6 7/8" (2308) **ATSD**6844*	7'-8 7/8" (2359) **ATSD**7044*
55 1/4" (1403)	7'-8 7/8" (2359) **ATSD**6448*	7'-10 7/8" (2410) **ATSD**6848*	8'-0 7/8" (2461) **ATSD**7048*
59 1/4" (1505)	8'-0 7/8" (2461) **ATSD**6450*	8'-2 7/8" (2511) **ATSD**6850*	8'-4 7/8" (2562) **ATSD**7050*
63 1/4" (1607)	8'-4 7/8" (2562) **ATSD**6454*	8'-6 7/8" (2613) **ATSD**6854*	8'-8 7/8" (2664) **ATSD**7054*
67 1/4" (1708)	8'-8 7/8" (2664) **ATSD**6458*	8'-10 7/8" (2715) **ATSD**6858*	9'-0 7/8" (2765) **ATSD**7058*

continued on page 108

Custom-size windows are available in 1/8" (3) increments. Contact your Andersen supplier for more information.

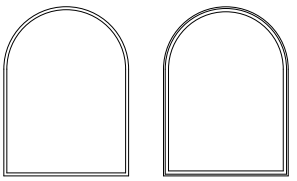

Direct-Set Springline Sash-Set Springline

Direct-set Springline (ATSD) window sizes shown. Use window dimensions and minimum rough opening formula shown for sash-set Springline (**ATS**) window sizes. For sash-set unobstructed glass dimensions, see pages 108-110.

All sizes shown, along with custom sizes, are available with PG upgrade.

Grille patterns shown on page 105.
Details shown on page 111.

- "Window Dimension" always refers to outside frame-to-frame dimension.
- "**Minimum Rough Opening**" **dimensions may need to be increased to allow for use of building wraps, flashing, sill panning, brackets, fasteners or other items. See pages 226-227 for more details.**
- Dimensions in parentheses are in millimeters.

*Tempered glass required. Some visual distortion may occur.

Direct-Set Springline™ Window Area Specifications *(continued from page 105)*

Window Number	Glass Area Sq. Ft./(m²)
ATSD3424	9.57 (0.89)
ATSD3428	10.55 (0.98)
ATSD3430	11.53 (1.07)
ATSD3434	12.51 (1.16)
ATSD3438	13.49 (1.25)
ATSD3440	14.47 (1.34)
ATSD3444	15.44 (1.43)
ATSD3448	16.42 (1.53)
ATSD3450	17.40 (1.62)
ATSD3454	18.38 (1.71)
ATSD3458	19.36 (1.80)
ATSD3460	20.34 (1.89)
ATSD3464	21.32 (1.98)
ATSD3468	22.30 (2.07)
ATSD3474	24.26 (2.25)
ATSD3480	26.22 (2.44)
ATSD3807	5.36 (0.50)
ATSD3810	6.72 (0.62)
ATSD3820	9.99 (0.93)
ATSD3824	11.08 (1.03)
ATSD3828	12.17 (1.13)
ATSD3830	13.26 (1.23)
ATSD3834	14.35 (1.33)
ATSD3838	15.44 (1.43)
ATSD3840	16.53 (1.54)
ATSD3844	17.63 (1.64)
ATSD3848	18.72 (1.74)
ATSD3850	19.81 (1.84)
ATSD3854	20.90 (1.94)
ATSD3858	21.99 (2.04)
ATSD3860	23.08 (2.14)
ATSD3864	24.17 (2.25)
ATSD3868	25.26 (2.35)
ATSD3874	27.44 (2.55)
ATSD3880	29.62 (2.75)
ATSD4007	6.38 (0.59)
ATSD4010	7.88 (0.73)
ATSD4020	11.48 (1.07)
ATSD4024	12.68 (1.18)
ATSD4028	13.89 (1.29)
ATSD4030	15.09 (1.40)
ATSD4034	16.29 (1.51)
ATSD4038	17.49 (1.62)
ATSD4040	18.69 (1.74)
ATSD4044	19.89 (1.85)
ATSD4048	21.09 (1.96)
ATSD4050	22.30 (2.07)
ATSD4054	23.50 (2.18)
ATSD4058	24.70 (2.29)
ATSD4060	25.90 (2.41)
ATSD4064	27.10 (2.52)
ATSD4068	28.30 (2.63)
ATSD4074	30.71 (2.85)
ATSD4080	33.11 (3.08)
ATSD4407	7.48 (0.70)
ATSD4410	9.12 (0.85)
ATSD4420	13.06 (1.21)
ATSD4424	14.37 (1.34)
ATSD4428	15.69 (1.46)
ATSD4430	17.00 (1.58)

Window Number	Glass Area Sq. Ft./(m²)
ATSD4434	18.31 (1.70)
ATSD4438	19.62 (1.82)
ATSD4440	20.94 (1.94)
ATSD4444	22.25 (2.07)
ATSD4448	23.56 (2.19)
ATSD4450	24.87 (2.31)
ATSD4454	26.19 (2.43)
ATSD4458	27.50 (2.55)
ATSD4460	28.81 (2.68)
ATSD4464	30.12 (2.80)
ATSD4468	31.44 (2.92)
ATSD4474	34.06 (3.16)
ATSD4480	36.69 (3.41)
ATSD4807	8.68 (0.81)
ATSD4810	10.45 (0.97)
ATSD4820	14.73 (1.37)
ATSD4824	16.15 (1.50)
ATSD4828	17.57 (1.63)
ATSD4830	19.00 (1.76)
ATSD4834	20.42 (1.90)
ATSD4838	21.84 (2.03)
ATSD4840	23.27 (2.16)
ATSD4844	24.69 (2.29)
ATSD4848	26.11 (2.43)
ATSD4850	27.54 (2.56)
ATSD4854	28.96 (2.69)
ATSD4858	30.39 (2.82)
ATSD4860	31.81 (2.96)
ATSD4864	33.23 (3.09)
ATSD4868	34.66 (3.22)
ATSD4874	37.50 (3.48)
ATSD4880	40.35 (3.75)
ATSD5007	9.96 (0.92)
ATSD5010	11.87 (1.10)
ATSD5020	16.48 (1.53)
ATSD5024	18.01 (1.67)
ATSD5028	19.55 (1.82)
ATSD5030	21.08 (1.96)
ATSD5034	22.62 (2.10)
ATSD5038	24.15 (2.24)
ATSD5040	25.69 (2.39)
ATSD5044	27.22 (2.53)
ATSD5048	28.76 (2.67)
ATSD5050	30.29 (2.81)
ATSD5054	31.83 (2.96)
ATSD5058	33.36 (3.10)
ATSD5060	34.89 (3.24)
ATSD5064	36.43 (3.38)
ATSD5068	37.96 (3.53)
ATSD5074	41.03 (3.81)
ATSD5080	44.10 (4.10)
ATSD5407	11.32 (1.05)
ATSD5410	13.38 (1.24)
ATSD5420	18.32 (1.70)
ATSD5424	19.96 (1.85)
ATSD5428	21.61 (2.01)
ATSD5430	23.25 (2.16)
ATSD5434	24.90 (2.31)
ATSD5438	26.55 (2.47)
ATSD5440	28.19 (2.62)

Window Number	Glass Area Sq. Ft./(m²)
ATSD5444	29.84 (2.77)
ATSD5448	31.48 (2.92)
ATSD5450	33.13 (3.08)
ATSD5454	34.78 (3.23)
ATSD5458	36.42 (3.38)
ATSD5460	38.07 (3.54)
ATSD5464	39.71 (3.69)
ATSD5468	41.36 (3.84)
ATSD5474	44.65 (4.15)
ATSD5480	47.94 (4.45)
ATSD5807	12.78 (1.19)
ATSD5810	14.97 (1.39)
ATSD5820	20.24 (1.88)
ATSD5824	22.00 (2.04)
ATSD5828	23.76 (2.21)
ATSD5830	25.51 (2.37)
ATSD5834	27.27 (2.53)
ATSD5838	29.03 (2.70)
ATSD5840	30.79 (2.86)
ATSD5844	32.54 (3.02)
ATSD5848	34.30 (3.19)
ATSD5850	36.06 (3.35)
ATSD5854	37.81 (3.51)
ATSD5858	39.57 (3.68)
ATSD5860	41.33 (3.84)
ATSD5864	43.08 (4.00)
ATSD5868	44.84 (4.17)
ATSD5874	48.35 (4.49)
ATSD5880	51.87 (4.82)
ATSD6007	14.32 (1.33)
ATSD6010	16.65 (1.55)
ATSD6020	22.26 (2.07)
ATSD6024	24.13 (2.24)
ATSD6028	25.99 (2.41)
ATSD6030	27.86 (2.59)
ATSD6034	29.73 (2.76)
ATSD6038	31.60 (2.94)
ATSD6040	33.47 (3.11)
ATSD6044	35.33 (3.28)
ATSD6048	37.20 (3.46)
ATSD6050	39.07 (3.63)
ATSD6054	40.94 (3.80)
ATSD6058	42.81 (3.98)
ATSD6060	44.67 (4.15)
ATSD6064	46.54 (4.32)
ATSD6068	48.41 (4.50)
ATSD6074	52.15 (4.84)
ATSD6080	55.88 (5.19)
ATSD6407	15.95 (1.48)
ATSD6410	18.42 (1.71)
ATSD6420	24.36 (2.26)
ATSD6424	26.34 (2.45)
ATSD6428	28.32 (2.63)
ATSD6430	30.30 (2.81)
ATSD6434	32.28 (3.00)
ATSD6438	34.25 (3.18)
ATSD6440	36.23 (3.37)
ATSD6444	38.21 (3.55)
ATSD6448	40.19 (3.73)
ATSD6450	42.17 (3.92)

Window Number	Glass Area Sq. Ft./(m²)
ATSD6454	44.15 (4.10)
ATSD6458	46.13 (4.29)
ATSD6460	48.11 (4.47)
ATSD6464	50.09 (4.65)
ATSD6468	52.07 (4.84)
ATSD6474	56.03 (5.20)
ATSD6480	59.98 (5.57)
ATSD6807	17.66 (1.64)
ATSD6810	20.28 (1.88)
ATSD6820	26.55 (2.47)
ATSD6824	28.64 (2.66)
ATSD6828	30.73 (2.85)
ATSD6830	32.82 (3.05)
ATSD6834	34.91 (3.24)
ATSD6838	37.00 (3.44)
ATSD6840	39.09 (3.63)
ATSD6844	41.18 (3.83)
ATSD6848	43.27 (4.02)
ATSD6850	45.36 (4.21)
ATSD6854	47.45 (4.41)
ATSD6858	49.54 (4.60)
ATSD6860	51.63 (4.80)
ATSD6864	53.72 (4.99)
ATSD6868	55.81 (5.18)
ATSD6874	59.99 (5.57)
ATSD6880	64.17 (5.96)
ATSD7007	19.47 (1.81)
ATSD7010	22.22 (2.06)
ATSD7020	28.82 (2.68)
ATSD7024	31.02 (2.88)
ATSD7028	33.23 (3.09)
ATSD7030	35.43 (3.29)
ATSD7034	37.63 (3.50)
ATSD7038	39.83 (3.70)
ATSD7040	42.03 (3.90)
ATSD7044	44.23 (4.11)
ATSD7048	46.43 (4.31)
ATSD7050	48.63 (4.52)
ATSD7054	50.84 (4.72)
ATSD7058	53.04 (4.93)
ATSD7060	55.24 (5.13)
ATSD7064	57.44 (5.34)
ATSD7068	59.64 (5.54)
ATSD7074	64.04 (5.95)
ATSD7080	68.45 (6.36)
ATSD7407	21.36 (1.98)
ATSD7410	24.25 (2.25)
ATSD7420	31.19 (2.90)
ATSD7424	33.50 (3.11)
ATSD7428	35.81 (3.33)
ATSD7430	38.12 (3.54)
ATSD7434	40.44 (3.76)
ATSD8007	25.40 (2.36)
ATSD8010	28.57 (2.65)
ATSD8020	36.17 (3.36)
ATSD8024	38.71 (3.60)
ATSD8028	41.24 (3.83)
ATSD8030	43.78 (4.07)

• Dimensions in parentheses are in square meters.

Table of Direct-Set Springline™ Window Sizes

Scale 1/8" (3) = 1'-0" (305) — 1:96 *(continued from page 106)*

Notes on page 106 also apply to this page.

Window Width Dimension	6'-3 1/4" (1911)	6'-7 1/4" (2013)	6'-11 1/4" (2115)
Minimum Rough Opening	6'-4" (1930)	6'-8" (2032)	7'-0" (2134)
Unobstructed Glass	71 1/4" (1810)	75 1/4" (1911)	79 1/4" (2013)

CUSTOM SIZES AVAILABLE

Window height shown in table

Minimum Rough Opening = window height + 3/4" (19)

Unobstructed Glass = window height – 4" (102)

CUSTOM SIZES AVAILABLE

Radius	37 5/8" (956)	39 5/8" (1006)	41 5/8" (1057)
Chord Height	37 5/8" (956)	39 5/8" (1006)	41 5/8" (1057)
Shoulder Height 71 1/4" (1810)	9'-0 7/8" (2765) **ATSD**6460*	9'-2 7/8" (2816) **ATSD**6860*	9'-4 7/8" (2867) **ATSD**7060*
75 1/4" (1911)	9'-4 7/8" (2867) **ATSD**6464*	9'-6 7/8" (2918) **ATSD**6864*	9'-8 7/8" (2969) **ATSD**7064*
79 1/4" (2013)	9'-8 7/8" (2969) **ATSD**6468*	9'-10 7/8" (3019) **ATSD**6868*	10'-0 7/8" (3070) **ATSD**7068*
87 1/4" (2216)	10'-4 7/8" (3172) **ATSD**6474*	10'-6 7/8" (3223) **ATSD**6874*	10'-8 7/8" (3273) **ATSD**7074*
95 1/4" (2419)	11'-0 7/8" (3375) **ATSD**6480*	11'-2 7/8" (3426) **ATSD**6880*	11'-4 7/8" (3477) **ATSD**7080*

Sash-Set Springline™ Window Unobstructed Glass Dimensions and Area Specifications

Window Number	Unobstructed Glass Width Inches/(mm)	Unobstructed Glass Height Inches/(mm)	Glass Area Sq. Ft./(m²)
ATS1807	12 5/8" (320)	9 1/4" (234)	0.69 (0.06)
ATS1810	12 5/8" (320)	14 1/4" (361)	1.13 (0.10)
ATS1820	12 5/8" (320)	26 1/4" (666)	2.17 (0.20)
ATS1824	12 5/8" (320)	30 1/4" (768)	2.52 (0.23)
ATS1828	12 5/8" (320)	34 1/4" (869)	2.87 (0.27)
ATS1830	12 5/8" (320)	38 1/4" (971)	3.22 (0.30)
ATS1834	12 5/8" (320)	42 1/4" (1072)	3.57 (0.33)
ATS1838	12 5/8" (320)	46 1/4" (1174)	3.92 (0.36)
ATS1840	12 5/8" (320)	50 1/4" (1276)	4.27 (0.40)
ATS1844	12 5/8" (320)	54 1/4" (1377)	4.62 (0.43)
ATS1848	12 5/8" (320)	58 1/4" (1479)	4.97 (0.46)
ATS1850	12 5/8" (320)	62 1/4" (1580)	5.32 (0.49)
ATS1854	12 5/8" (320)	66 1/4" (1682)	5.67 (0.53)
ATS1858	12 5/8" (320)	70 1/4" (1784)	6.02 (0.56)
ATS1860	12 5/8" (320)	74 1/4" (1885)	6.37 (0.59)
ATS1864	12 5/8" (320)	78 1/4" (1987)	6.72 (0.62)
ATS1868	12 5/8" (320)	82 1/4" (2088)	7.07 (0.66)
ATS1874	12 5/8" (320)	90 1/4" (2292)	7.77 (0.72)
ATS1880	12 5/8" (320)	98 1/4" (2495)	8.47 (0.79)
ATS2007	16 5/8" (421)	11 1/4" (285)	1.09 (0.10)
ATS2010	16 5/8" (421)	16 1/4" (412)	1.66 (0.15)
ATS2020	16 5/8" (421)	28 1/4" (717)	3.05 (0.28)
ATS2024	16 5/8" (421)	32 1/4" (818)	3.51 (0.33)
ATS2028	16 5/8" (421)	36 1/4" (920)	3.97 (0.37)
ATS2030	16 5/8" (421)	40 1/4" (1022)	4.43 (0.41)
ATS2034	16 5/8" (421)	44 1/4" (1123)	4.89 (0.45)
ATS2038	16 5/8" (421)	48 1/4" (1225)	5.35 (0.50)
ATS2040	16 5/8" (421)	52 1/4" (1326)	5.81 (0.54)
ATS2044	16 5/8" (421)	56 1/4" (1428)	6.27 (0.58)
ATS2048	16 5/8" (421)	60 1/4" (1530)	6.73 (0.63)
ATS2050	16 5/8" (421)	64 1/4" (1631)	7.20 (0.67)
ATS2054	16 5/8" (421)	68 1/4" (1733)	7.66 (0.71)
ATS2058	16 5/8" (421)	72 1/4" (1834)	8.12 (0.75)
ATS2060	16 5/8" (421)	76 1/4" (1936)	8.58 (0.80)
ATS2064	16 5/8" (421)	80 1/4" (2038)	9.04 (0.84)
ATS2068	16 5/8" (421)	84 1/4" (2139)	9.50 (0.88)
ATS2074	16 5/8" (421)	92 1/4" (2342)	10.42 (0.97)
ATS2080	16 5/8" (421)	100 1/4" (2546)	11.34 (1.05)
ATS2407	20 5/8" (523)	13 1/4" (336)	1.57 (0.15)
ATS2410	20 5/8" (523)	18 1/4" (463)	2.29 (0.21)
ATS2420	20 5/8" (523)	30 1/4" (768)	4.01 (0.37)
ATS2424	20 5/8" (523)	34 1/4" (869)	4.58 (0.43)
ATS2428	20 5/8" (523)	38 1/4" (971)	5.15 (0.48)
ATS2430	20 5/8" (523)	42 1/4" (1072)	5.72 (0.53)
ATS2434	20 5/8" (523)	46 1/4" (1174)	6.29 (0.58)
ATS2438	20 5/8" (523)	50 1/4" (1276)	6.87 (0.64)
ATS2440	20 5/8" (523)	54 1/4" (1377)	7.44 (0.69)
ATS2444	20 5/8" (523)	58 1/4" (1479)	8.01 (0.74)
ATS2448	20 5/8" (523)	62 1/4" (1580)	8.58 (0.80)
ATS2450	20 5/8" (523)	66 1/4" (1682)	9.15 (0.85)
ATS2454	20 5/8" (523)	70 1/4" (1784)	9.73 (0.90)
ATS2458	20 5/8" (523)	74 1/4" (1885)	10.30 (0.96)
ATS2460	20 5/8" (523)	78 1/4" (1987)	10.87 (1.01)
ATS2464	20 5/8" (523)	82 1/4" (2088)	11.44 (1.06)
ATS2468	20 5/8" (523)	86 1/4" (2190)	12.01 (1.12)
ATS2474	20 5/8" (523)	94 1/4" (2393)	13.16 (1.22)
ATS2480	20 5/8" (523)	102 1/4" (2596)	14.30 (1.33)
ATS2607	22 5/8" (574)	14 1/4" (361)	1.85 (0.17)
ATS2610	22 5/8" (574)	19 1/4" (488)	2.64 (0.24)

• Dimensions in parentheses are in millimeters or square meters.

continued on next page

Sash-Set Springline™ Window Unobstructed Glass Dimensions and Area Specifications *(continued)*

Window Number	Unobstructed Glass Width Inches/(mm)		Unobstructed Glass Height Inches/(mm)		Glass Area Sq. Ft./(m²)	
ATS2620	22 5/8"	(574)	31 1/4"	(793)	4.52	(0.42)
ATS2624	22 5/8"	(574)	35 1/4"	(895)	5.15	(0.48)
ATS2628	22 5/8"	(574)	39 1/4"	(996)	5.77	(0.54)
ATS2630	22 5/8"	(574)	43 1/4"	(1098)	6.40	(0.59)
ATS2634	22 5/8"	(574)	47 1/4"	(1199)	7.03	(0.65)
ATS2638	22 5/8"	(574)	51 1/4"	(1301)	7.66	(0.71)
ATS2640	22 5/8"	(574)	55 1/4"	(1403)	8.28	(0.77)
ATS2644	22 5/8"	(574)	59 1/4"	(1504)	8.91	(0.83)
ATS2648	22 5/8"	(574)	63 1/4"	(1606)	9.54	(0.89)
ATS2650	22 5/8"	(574)	67 1/4"	(1707)	10.17	(0.94)
ATS2654	22 5/8"	(574)	71 1/4"	(1809)	10.79	(1.00)
ATS2658	22 5/8"	(574)	75 1/4"	(1911)	11.42	(1.06)
ATS2660	22 5/8"	(574)	79 1/4"	(2012)	12.05	(1.12)
ATS2664	22 5/8"	(574)	83 1/4"	(2114)	12.68	(1.18)
ATS2668	22 5/8"	(574)	87 1/4"	(2215)	13.30	(1.24)
ATS2674	22 5/8"	(574)	95 1/4"	(2419)	14.56	(1.35)
ATS2680	22 5/8"	(574)	103 1/4"	(2622)	15.81	(1.47)
ATS2807	24 5/8"	(625)	15 1/4"	(387)	2.15	(0.20)
ATS2810	24 5/8"	(625)	20 1/4"	(514)	3.00	(0.28)
ATS2820	24 5/8"	(625)	32 1/4"	(818)	5.05	(0.47)
ATS2824	24 5/8"	(625)	36 1/4"	(920)	5.74	(0.53)
ATS2828	24 5/8"	(625)	40 1/4"	(1022)	6.42	(0.60)
ATS2830	24 5/8"	(625)	44 1/4"	(1123)	7.10	(0.66)
ATS2834	24 5/8"	(625)	48 1/4"	(1225)	7.78	(0.72)
ATS2838	24 5/8"	(625)	52 1/4"	(1326)	8.47	(0.79)
ATS2840	24 5/8"	(625)	56 1/4"	(1428)	9.15	(0.85)
ATS2844	24 5/8"	(625)	60 1/4"	(1530)	9.83	(0.91)
ATS2848	24 5/8"	(625)	64 1/4"	(1631)	10.52	(0.98)
ATS2850	24 5/8"	(625)	68 1/4"	(1733)	11.20	(1.04)
ATS2854	24 5/8"	(625)	72 1/4"	(1834)	11.88	(1.10)
ATS2858	24 5/8"	(625)	76 1/4"	(1936)	12.57	(1.17)
ATS2860	24 5/8"	(625)	80 1/4"	(2038)	13.25	(1.23)
ATS2864	24 5/8"	(625)	84 1/4"	(2139)	13.93	(1.29)
ATS2868	24 5/8"	(625)	88 1/4"	(2241)	14.62	(1.36)
ATS2874	24 5/8"	(625)	96 1/4"	(2444)	15.98	(1.48)
ATS2880	24 5/8"	(625)	104 1/4"	(2647)	17.35	(1.61)
ATS21007	26 5/8"	(675)	16 1/4"	(412)	2.47	(0.23)
ATS21010	26 5/8"	(675)	21 1/4"	(539)	3.39	(0.32)
ATS21020	26 5/8"	(675)	33 1/4"	(844)	5.61	(0.52)
ATS21024	26 5/8"	(675)	37 1/4"	(945)	6.35	(0.59)
ATS21028	26 5/8"	(675)	41 1/4"	(1047)	7.09	(0.66)
ATS21030	26 5/8"	(675)	45 1/4"	(1149)	7.82	(0.73)
ATS21034	26 5/8"	(675)	49 1/4"	(1250)	8.56	(0.80)
ATS21038	26 5/8"	(675)	53 1/4"	(1352)	9.30	(0.86)
ATS21040	26 5/8"	(675)	57 1/4"	(1453)	10.04	(0.93)
ATS21044	26 5/8"	(675)	61 1/4"	(1555)	10.78	(1.00)
ATS21048	26 5/8"	(675)	65 1/4"	(1657)	11.52	(1.07)
ATS21050	26 5/8"	(675)	69 1/4"	(1758)	12.26	(1.14)
ATS21054	26 5/8"	(675)	73 1/4"	(1860)	13.00	(1.21)
ATS21058	26 5/8"	(675)	77 1/4"	(1961)	13.73	(1.28)
ATS21060	26 5/8"	(675)	81 1/4"	(2063)	14.47	(1.34)
ATS21064	26 5/8"	(675)	85 1/4"	(2165)	15.21	(1.41)
ATS21068	26 5/8"	(675)	89 1/4"	(2266)	15.95	(1.48)
ATS21074	26 5/8"	(675)	97 1/4"	(2469)	17.43	(1.62)
ATS21080	26 5/8"	(675)	105 1/4"	(2673)	18.90	(1.76)
ATS3007	28 5/8"	(726)	17 1/4"	(437)	2.81	(0.26)
ATS3010	28 5/8"	(726)	22 1/4"	(564)	3.80	(0.35)
ATS3020	28 5/8"	(726)	34 1/4"	(869)	6.19	(0.57)
ATS3024	28 5/8"	(726)	38 1/4"	(971)	6.98	(0.65)
ATS3028	28 5/8"	(726)	42 1/4"	(1072)	7.77	(0.72)

Window Number	Unobstructed Glass Width Inches/(mm)		Unobstructed Glass Height Inches/(mm)		Glass Area Sq. Ft./(m²)	
ATS3030	28 5/8"	(726)	46 1/4"	(1174)	8.57	(0.80)
ATS3034	28 5/8"	(726)	50 1/4"	(1276)	9.36	(0.87)
ATS3038	28 5/8"	(726)	54 1/4"	(1377)	10.16	(0.94)
ATS3040	28 5/8"	(726)	58 1/4"	(1479)	10.95	(1.02)
ATS3044	28 5/8"	(726)	62 1/4"	(1580)	11.75	(1.09)
ATS3048	28 5/8"	(726)	66 1/4"	(1682)	12.54	(1.16)
ATS3050	28 5/8"	(726)	70 1/4"	(1784)	13.33	(1.24)
ATS3054	28 5/8"	(726)	74 1/4"	(1885)	14.13	(1.31)
ATS3058	28 5/8"	(726)	78 1/4"	(1987)	14.92	(1.39)
ATS3060	28 5/8"	(726)	82 1/4"	(2088)	15.72	(1.46)
ATS3064	28 5/8"	(726)	86 1/4"	(2190)	16.51	(1.53)
ATS3068	28 5/8"	(726)	90 1/4"	(2292)	17.31	(1.61)
ATS3074	28 5/8"	(726)	98 1/4"	(2495)	18.89	(1.76)
ATS3080	28 5/8"	(726)	106 1/4"	(2698)	20.48	(1.90)
ATS3207	30 5/8"	(777)	18 1/4"	(463)	3.17	(0.29)
ATS3210	30 5/8"	(777)	23 1/4"	(590)	4.24	(0.39)
ATS3220	30 5/8"	(777)	35 1/4"	(895)	6.79	(0.63)
ATS3224	30 5/8"	(777)	39 1/4"	(996)	7.63	(0.71)
ATS3228	30 5/8"	(777)	43 1/4"	(1098)	8.48	(0.79)
ATS3230	30 5/8"	(777)	47 1/4"	(1199)	9.33	(0.87)
ATS3234	30 5/8"	(777)	51 1/4"	(1301)	10.18	(0.95)
ATS3238	30 5/8"	(777)	55 1/4"	(1403)	11.03	(1.03)
ATS3240	30 5/8"	(777)	59 1/4"	(1504)	11.88	(1.10)
ATS3244	30 5/8"	(777)	63 1/4"	(1606)	12.73	(1.18)
ATS3248	30 5/8"	(777)	67 1/4"	(1707)	13.58	(1.26)
ATS3250	30 5/8"	(777)	71 1/4"	(1809)	14.43	(1.34)
ATS3254	30 5/8"	(777)	75 1/4"	(1911)	15.28	(1.42)
ATS3258	30 5/8"	(777)	79 1/4"	(2012)	16.13	(1.50)
ATS3260	30 5/8"	(777)	83 1/4"	(2114)	16.98	(1.58)
ATS3264	30 5/8"	(777)	87 1/4"	(2215)	17.83	(1.66)
ATS3268	30 5/8"	(777)	91 1/4"	(2317)	18.68	(1.74)
ATS3274	30 5/8"	(777)	99 1/4"	(2520)	20.38	(1.89)
ATS3280	30 5/8"	(777)	107 1/4"	(2723)	22.08	(2.05)
ATS3407	32 5/8"	(828)	19 1/4"	(488)	3.56	(0.33)
ATS3410	32 5/8"	(828)	24 1/4"	(615)	4.69	(0.44)
ATS3420	32 5/8"	(828)	36 1/4"	(920)	7.41	(0.69)
ATS3424	32 5/8"	(828)	40 1/4"	(1022)	8.31	(0.77)
ATS3428	32 5/8"	(828)	44 1/4"	(1123)	9.22	(0.86)
ATS3430	32 5/8"	(828)	48 1/4"	(1225)	10.12	(0.94)
ATS3434	32 5/8"	(828)	52 1/4"	(1326)	11.03	(1.02)
ATS3438	32 5/8"	(828)	56 1/4"	(1428)	11.93	(1.11)
ATS3440	32 5/8"	(828)	60 1/4"	(1530)	12.84	(1.19)
ATS3444	32 5/8"	(828)	64 1/4"	(1631)	13.74	(1.28)
ATS3448	32 5/8"	(828)	68 1/4"	(1733)	14.65	(1.36)
ATS3450	32 5/8"	(828)	72 1/4"	(1834)	15.55	(1.45)
ATS3454	32 5/8"	(828)	76 1/4"	(1936)	16.46	(1.53)
ATS3458	32 5/8"	(828)	80 1/4"	(2038)	17.37	(1.61)
ATS3460	32 5/8"	(828)	84 1/4"	(2139)	18.27	(1.70)
ATS3464	32 5/8"	(828)	88 1/4"	(2241)	19.18	(1.78)
ATS3468	32 5/8"	(828)	92 1/4"	(2342)	20.08	(1.87)
ATS3474	32 5/8"	(828)	100 1/4"	(2546)	21.89	(2.03)
ATS3480	32 5/8"	(828)	108 1/4"	(2749)	23.70	(2.20)
ATS3807	36 5/8"	(929)	21 1/4"	(539)	4.39	(0.41)
ATS3810	36 5/8"	(929)	26 1/4"	(666)	5.67	(0.53)
ATS3820	36 5/8"	(929)	38 1/4"	(971)	8.71	(0.81)
ATS3824	36 5/8"	(929)	42 1/4"	(1072)	9.73	(0.90)
ATS3828	36 5/8"	(929)	46 1/4"	(1174)	10.75	(1.00)
ATS3830	36 5/8"	(929)	50 1/4"	(1276)	11.76	(1.09)
ATS3834	36 5/8"	(929)	54 1/4"	(1377)	12.78	(1.19)
ATS3838	36 5/8"	(929)	58 1/4"	(1479)	13.80	(1.28)

Window Number	Unobstructed Glass Width Inches/(mm)		Unobstructed Glass Height Inches/(mm)		Glass Area Sq. Ft./(m²)	
ATS3840	36 5/8"	(929)	62 1/4"	(1580)	14.81	(1.38)
ATS3844	36 5/8"	(929)	66 1/4"	(1682)	15.83	(1.47)
ATS3848	36 5/8"	(929)	70 1/4"	(1784)	16.85	(1.57)
ATS3850	36 5/8"	(929)	74 1/4"	(1885)	17.86	(1.66)
ATS3854	36 5/8"	(929)	78 1/4"	(1987)	18.88	(1.75)
ATS3858	36 5/8"	(929)	82 1/4"	(2088)	19.90	(1.85)
ATS3860	36 5/8"	(929)	86 1/4"	(2190)	20.91	(1.94)
ATS3864	36 5/8"	(929)	90 1/4"	(2292)	21.93	(2.04)
ATS3868	36 5/8"	(929)	94 1/4"	(2393)	22.95	(2.13)
ATS3874	36 5/8"	(929)	102 1/4"	(2596)	24.98	(2.32)
ATS3880	36 5/8"	(929)	110 1/4"	(2800)	27.01	(2.51)
ATS4007	40 5/8"	(1031)	23 1/4"	(590)	5.32	(0.49)
ATS4010	40 5/8"	(1031)	28 1/4"	(717)	6.73	(0.62)
ATS4020	40 5/8"	(1031)	40 1/4"	(1022)	10.11	(0.94)
ATS4024	40 5/8"	(1031)	44 1/4"	(1123)	11.24	(1.04)
ATS4028	40 5/8"	(1031)	48 1/4"	(1225)	12.37	(1.15)
ATS4030	40 5/8"	(1031)	52 1/4"	(1326)	13.49	(1.25)
ATS4034	40 5/8"	(1031)	56 1/4"	(1428)	14.62	(1.36)
ATS4038	40 5/8"	(1031)	60 1/4"	(1530)	15.75	(1.46)
ATS4040	40 5/8"	(1031)	64 1/4"	(1631)	16.88	(1.57)
ATS4044	40 5/8"	(1031)	68 1/4"	(1733)	18.00	(1.67)
ATS4048	40 5/8"	(1031)	72 1/4"	(1834)	19.13	(1.78)
ATS4050	40 5/8"	(1031)	76 1/4"	(1936)	20.26	(1.88)
ATS4054	40 5/8"	(1031)	80 1/4"	(2038)	21.39	(1.99)
ATS4058	40 5/8"	(1031)	84 1/4"	(2139)	22.51	(2.09)
ATS4060	40 5/8"	(1031)	88 1/4"	(2241)	23.64	(2.20)
ATS4064	40 5/8"	(1031)	92 1/4"	(2342)	24.77	(2.30)
ATS4068	40 5/8"	(1031)	96 1/4"	(2444)	25.90	(2.41)
ATS4074	40 5/8"	(1031)	104 1/4"	(2647)	28.15	(2.62)
ATS4080	40 5/8"	(1031)	112 1/4"	(2850)	30.41	(2.82)
ATS4407	44 5/8"	(1133)	25 1/4"	(641)	6.33	(0.59)
ATS4410	44 5/8"	(1133)	30 1/4"	(768)	7.88	(0.73)
ATS4420	44 5/8"	(1133)	42 1/4"	(1072)	11.59	(1.08)
ATS4424	44 5/8"	(1133)	46 1/4"	(1174)	12.83	(1.19)
ATS4428	44 5/8"	(1133)	50 1/4"	(1276)	14.07	(1.31)
ATS4430	44 5/8"	(1133)	54 1/4"	(1377)	15.31	(1.42)
ATS4434	44 5/8"	(1133)	58 1/4"	(1479)	16.55	(1.54)
ATS4438	44 5/8"	(1133)	62 1/4"	(1580)	17.79	(1.65)
ATS4440	44 5/8"	(1133)	66 1/4"	(1682)	19.02	(1.77)
ATS4444	44 5/8"	(1133)	70 1/4"	(1784)	20.26	(1.88)
ATS4448	44 5/8"	(1133)	74 1/4"	(1885)	21.50	(2.00)
ATS4450	44 5/8"	(1133)	78 1/4"	(1987)	22.74	(2.11)
ATS4454	44 5/8"	(1133)	82 1/4"	(2088)	23.98	(2.23)
ATS4458	44 5/8"	(1133)	86 1/4"	(2190)	25.22	(2.34)
ATS4460	44 5/8"	(1133)	90 1/4"	(2292)	26.46	(2.46)
ATS4464	44 5/8"	(1133)	94 1/4"	(2393)	27.70	(2.57)
ATS4468	44 5/8"	(1133)	98 1/4"	(2495)	28.93	(2.69)
ATS4474	44 5/8"	(1133)	106 1/4"	(2698)	31.41	(2.92)
ATS4480	44 5/8"	(1133)	114 1/4"	(2901)	33.89	(3.15)
ATS4807	48 5/8"	(1234)	27 1/4"	(691)	7.43	(0.69)
ATS4810	48 5/8"	(1234)	32 1/4"	(818)	9.11	(0.85)
ATS4820	48 5/8"	(1234)	44 1/4"	(1123)	13.16	(1.22)
ATS4824	48 5/8"	(1234)	48 1/4"	(1225)	14.51	(1.35)
ATS4828	48 5/8"	(1234)	52 1/4"	(1326)	15.86	(1.47)
ATS4830	48 5/8"	(1234)	56 1/4"	(1428)	17.21	(1.60)
ATS4834	48 5/8"	(1234)	60 1/4"	(1530)	18.56	(1.72)
ATS4838	48 5/8"	(1234)	64.219	(1631)	19.91	(1.85)
ATS4840	48 5/8"	(1234)	68 1/4"	(1733)	21.26	(1.98)
ATS4844	48 5/8"	(1234)	72 1/4"	(1834)	22.61	(2.10)

• Dimensions in parentheses are in millimeters or square meters.

continued on next page

Sash-Set Springline™ Window Unobstructed Glass Dimensions and Area Specifications *(continued)*

Window Number	Unobstructed Glass Width Inches/(mm)		Unobstructed Glass Height Inches/(mm)		Glass Area Sq. Ft./(m²)	
ATS4848	48 5/8"	(1234)	76 1/4"	(1936)	23.96	(2.23)
ATS4850	48 5/8"	(1234)	80 1/4"	(2038)	25.31	(2.35)
ATS4854	48 5/8"	(1234)	84 1/4"	(2139)	26.66	(2.48)
ATS4858	48 5/8"	(1234)	88 1/4"	(2241)	28.01	(2.60)
ATS4860	48 5/8"	(1234)	92 1/4"	(2342)	29.36	(2.73)
ATS4864	48 5/8"	(1234)	96 1/4"	(2444)	30.71	(2.85)
ATS4868	48 5/8"	(1234)	100 1/4"	(2546)	32.06	(2.98)
ATS4874	48 5/8"	(1234)	108 1/4"	(2749)	34.76	(3.23)
ATS4880	48 5/8"	(1234)	116 1/4"	(2952)	37.46	(3.48)
ATS5007	52 5/8"	(1336)	29 1/4"	(742)	8.61	(0.80)
ATS5010	52 5/8"	(1336)	34 1/4"	(869)	10.44	(0.97)
ATS5020	52 5/8"	(1336)	46 1/4"	(1174)	14.82	(1.38)
ATS5024	52 5/8"	(1336)	50 1/4"	(1276)	16.28	(1.51)
ATS5028	52 5/8"	(1336)	54 1/4"	(1377)	17.74	(1.65)
ATS5030	52 5/8"	(1336)	58 1/4"	(1479)	19.20	(1.78)
ATS5034	52 5/8"	(1336)	62 1/4"	(1580)	20.66	(1.92)
ATS5038	52 5/8"	(1336)	66 1/4"	(1682)	22.12	(2.06)
ATS5040	52 5/8"	(1336)	70 1/4"	(1784)	23.59	(2.19)
ATS5044	52 5/8"	(1336)	74 1/4"	(1885)	25.05	(2.33)
ATS5048	52 5/8"	(1336)	78 1/4"	(1987)	26.51	(2.46)
ATS5050	52 5/8"	(1336)	82 1/4"	(2088)	27.97	(2.60)
ATS5054	52 5/8"	(1336)	86 1/4"	(2190)	29.43	(2.73)
ATS5058	52 5/8"	(1336)	90 1/4"	(2292)	30.89	(2.87)
ATS5060	52 5/8"	(1336)	94 1/4"	(2393)	32.35	(3.01)
ATS5064	52 5/8"	(1336)	98 1/4"	(2495)	33.81	(3.14)
ATS5068	52 5/8"	(1336)	102 1/4"	(2596)	35.27	(3.28)
ATS5074	52 5/8"	(1336)	110 1/4"	(2800)	38.19	(3.55)
ATS5080	52 5/8"	(1336)	118 1/4"	(3003)	41.12	(3.82)
ATS5407	56 5/8"	(1437)	31 1/4"	(793)	9.88	(0.92)
ATS5410	56 5/8"	(1437)	36 1/4"	(920)	11.85	(1.10)
ATS5420	56 5/8"	(1437)	48 1/4"	(1225)	16.56	(1.54)
ATS5424	56 5/8"	(1437)	52 1/4"	(1326)	18.14	(1.68)
ATS5428	56 5/8"	(1437)	56 1/4"	(1428)	19.71	(1.83)
ATS5430	56 5/8"	(1437)	60 1/4"	(1530)	21.28	(1.98)
ATS5434	56 5/8"	(1437)	64 1/4"	(1631)	22.85	(2.12)
ATS5438	56 5/8"	(1437)	68 1/4"	(1733)	24.42	(2.27)
ATS5440	56 5/8"	(1437)	72 1/4"	(1834)	26.00	(2.42)
ATS5444	56 5/8"	(1437)	76 1/4"	(1936)	27.57	(2.56)
ATS5448	56 5/8"	(1437)	80 1/4"	(2038)	29.14	(2.71)
ATS5450	56 5/8"	(1437)	84 1/4"	(2139)	30.71	(2.85)
ATS5454	56 5/8"	(1437)	88 1/4"	(2241)	32.28	(3.00)
ATS5458	56 5/8"	(1437)	92 1/4"	(2342)	33.86	(3.15)
ATS5460	56 5/8"	(1437)	96 1/4"	(2444)	35.43	(3.29)
ATS5464	56 5/8"	(1437)	100 1/4"	(2546)	37.00	(3.44)
ATS5468	56 5/8"	(1437)	104 1/4"	(2647)	38.57	(3.58)
ATS5474	56 5/8"	(1437)	112 1/4"	(2850)	41.72	(3.88)
ATS5480	56 5/8"	(1437)	120 1/4"	(3054)	44.86	(4.17)
ATS5807	60 5/8"	(1539)	33 1/4"	(844)	11.24	(1.04)
ATS5810	60 5/8"	(1539)	38 1/4"	(971)	13.35	(1.24)
ATS5820	60 5/8"	(1539)	50 1/4"	(1276)	18.40	(1.71)
ATS5824	60 5/8"	(1539)	54 1/4"	(1377)	20.08	(1.87)
ATS5828	60 5/8"	(1539)	58 1/4"	(1479)	21.76	(2.02)
ATS5830	60 5/8"	(1539)	62 1/4"	(1580)	23.45	(2.18)
ATS5834	60 5/8"	(1539)	66 1/4"	(1682)	25.13	(2.33)
ATS5838	60 5/8"	(1539)	70 1/4"	(1784)	26.81	(2.49)
ATS5840	60 5/8"	(1539)	74 1/4"	(1885)	28.49	(2.65)
ATS5844	60 5/8"	(1539)	78 1/4"	(1987)	30.18	(2.80)
ATS5848	60 5/8"	(1539)	82 1/4"	(2088)	31.86	(2.96)
ATS5850	60 5/8"	(1539)	86 1/4"	(2190)	33.54	(3.12)
ATS5854	60 5/8"	(1539)	90 1/4"	(2292)	35.23	(3.27)

Window Number	Unobstructed Glass Width Inches/(mm)		Unobstructed Glass Height Inches/(mm)		Glass Area Sq. Ft./(m²)	
ATS5858	60 5/8"	(1539)	94 1/4"	(2393)	36.91	(3.43)
ATS5860	60 5/8"	(1539)	98 1/4"	(2495)	38.59	(3.59)
ATS5864	60 5/8"	(1539)	102 1/4"	(2596)	40.28	(3.74)
ATS5868	60 5/8"	(1539)	106 1/4"	(2698)	41.96	(3.90)
ATS5874	60 5/8"	(1539)	114 1/4"	(2901)	45.33	(4.21)
ATS5880	60 5/8"	(1539)	122 1/4"	(3104)	48.69	(4.52)
ATS6007	64 5/8"	(1641)	35 1/4"	(895)	12.69	(1.18)
ATS6010	64 5/8"	(1641)	40 1/4"	(1022)	14.93	(1.39)
ATS6020	64 5/8"	(1641)	52 1/4"	(1326)	20.31	(1.89)
ATS6024	64 5/8"	(1641)	56 1/4"	(1428)	22.11	(2.05)
ATS6028	64 5/8"	(1641)	60 1/4"	(1530)	23.90	(2.22)
ATS6030	64 5/8"	(1641)	64 1/4"	(1631)	25.70	(2.39)
ATS6034	64 5/8"	(1641)	68 1/4"	(1733)	27.49	(2.55)
ATS6038	64 5/8"	(1641)	72 1/4"	(1834)	29.29	(2.72)
ATS6040	64 5/8"	(1641)	76 1/4"	(1936)	31.08	(2.89)
ATS6044	64 5/8"	(1641)	80 1/4"	(2038)	32.87	(3.05)
ATS6048	64 5/8"	(1641)	84 1/4"	(2139)	34.67	(3.22)
ATS6050	64 5/8"	(1641)	88 1/4"	(2241)	36.46	(3.39)
ATS6054	64 5/8"	(1641)	92 1/4"	(2342)	38.26	(3.55)
ATS6058	64 5/8"	(1641)	96 1/4"	(2444)	40.05	(3.72)
ATS6060	64 5/8"	(1641)	100 1/4"	(2546)	41.85	(3.89)
ATS6064	64 5/8"	(1641)	104 1/4"	(2647)	43.64	(4.05)
ATS6068	64 5/8"	(1641)	108 1/4"	(2749)	45.43	(4.22)
ATS6074	64 5/8"	(1641)	116 1/4"	(2952)	49.02	(4.55)
ATS6080	64 5/8"	(1641)	124 1/4"	(3155)	52.61	(4.89)
ATS6407	68 5/8"	(1742)	37 1/4"	(945)	14.22	(1.32)
ATS6410	68 5/8"	(1742)	42 1/4"	(1072)	16.60	(1.54)
ATS6420	68 5/8"	(1742)	54 1/4"	(1377)	22.32	(2.07)
ATS6424	68 5/8"	(1742)	58 1/4"	(1479)	24.23	(2.25)
ATS6428	68 5/8"	(1742)	62 1/4"	(1580)	26.13	(2.43)
ATS6430	68 5/8"	(1742)	66 1/4"	(1682)	28.04	(2.60)
ATS6434	68 5/8"	(1742)	70 1/4"	(1784)	29.94	(2.78)
ATS6438	68 5/8"	(1742)	74 1/4"	(1885)	31.85	(2.96)
ATS6440	68 5/8"	(1742)	78 1/4"	(1987)	33.75	(3.14)
ATS6444	68 5/8"	(1742)	82 1/4"	(2088)	35.66	(3.31)
ATS6448	68 5/8"	(1742)	86 1/4"	(2190)	37.56	(3.49)
ATS6450	68 5/8"	(1742)	90 1/4"	(2292)	39.47	(3.67)
ATS6454	68 5/8"	(1742)	94 1/4"	(2393)	41.37	(3.84)
ATS6458	68 5/8"	(1742)	98 1/4"	(2495)	43.28	(4.02)
ATS6460	68 5/8"	(1742)	102 1/4"	(2596)	45.19	(4.20)
ATS6464	68 5/8"	(1742)	106 1/4"	(2698)	47.09	(4.37)
ATS6468	68 5/8"	(1742)	110 1/4"	(2800)	49.00	(4.55)
ATS6474	68 5/8"	(1742)	118 1/4"	(3003)	52.81	(4.91)
ATS6480	68 5/8"	(1742)	126 1/4"	(3206)	56.62	(5.26)
ATS6807	72 5/8"	(1844)	39 1/4"	(996)	15.84	(1.47)
ATS6810	72 5/8"	(1844)	44 1/4"	(1123)	18.37	(1.71)
ATS6820	72 5/8"	(1844)	56 1/4"	(1428)	24.41	(2.27)
ATS6824	72 5/8"	(1844)	60 1/4"	(1530)	26.43	(2.46)
ATS6828	72 5/8"	(1844)	64 1/4"	(1631)	28.45	(2.64)
ATS6830	72 5/8"	(1844)	68 1/4"	(1733)	30.46	(2.83)
ATS6834	72 5/8"	(1844)	72 1/4"	(1834)	32.48	(3.02)
ATS6838	72 5/8"	(1844)	76 1/4"	(1936)	34.50	(3.20)
ATS6840	72 5/8"	(1844)	80 1/4"	(2038)	36.51	(3.39)
ATS6844	72 5/8"	(1844)	84 1/4"	(2139)	38.53	(3.58)
ATS6848	72 5/8"	(1844)	88 1/4"	(2241)	40.55	(3.77)
ATS6850	72 5/8"	(1844)	92 1/4"	(2342)	42.56	(3.95)
ATS6854	72 5/8"	(1844)	96 1/4"	(2444)	44.58	(4.14)
ATS6858	72 5/8"	(1844)	100 1/4"	(2546)	46.60	(4.33)
ATS6860	72 5/8"	(1844)	104 1/4"	(2647)	48.61	(4.52)
ATS6864	72 5/8"	(1844)	108 1/4"	(2749)	50.63	(4.70)

Window Number	Unobstructed Glass Width Inches/(mm)		Unobstructed Glass Height Inches/(mm)		Glass Area Sq. Ft./(m²)	
ATS6868	72 5/8"	(1844)	112 1/4"	(2850)	52.65	(4.89)
ATS6874	72 5/8"	(1844)	120 1/4"	(3054)	56.68	(5.27)
ATS6880	72 5/8"	(1844)	128 1/4"	(3257)	60.71	(5.64)
ATS7007	76 5/8"	(1945)	41 1/4"	(1047)	17.55	(1.63)
ATS7010	76 5/8"	(1945)	46 1/4"	(1174)	20.21	(1.88)
ATS7020	76 5/8"	(1945)	58 1/4"	(1479)	26.60	(2.47)
ATS7024	76 5/8"	(1945)	62 1/4"	(1580)	28.72	(2.67)
ATS7028	76 5/8"	(1945)	66 1/4"	(1682)	30.85	(2.87)
ATS7030	76 5/8"	(1945)	70 1/4"	(1784)	32.98	(3.06)
ATS7034	76 5/8"	(1945)	74 1/4"	(1885)	35.11	(3.26)
ATS7038	76 5/8"	(1945)	78 1/4"	(1987)	37.23	(3.46)
ATS7040	76 5/8"	(1945)	82 1/4"	(2088)	39.36	(3.66)
ATS7044	76 5/8"	(1945)	86 1/4"	(2190)	41.49	(3.85)
ATS7048	76 5/8"	(1945)	90 1/4"	(2292)	43.62	(4.05)
ATS7050	76 5/8"	(1945)	94 1/4"	(2393)	45.74	(4.25)
ATS7054	76 5/8"	(1945)	98 1/4"	(2495)	47.87	(4.45)
ATS7058	76 5/8"	(1945)	102 1/4"	(2596)	50.00	(4.64)
ATS7060	76 5/8"	(1945)	106 1/4"	(2698)	52.13	(4.84)
ATS7064	76 5/8"	(1945)	110 1/4"	(2800)	54.25	(5.04)
ATS7068	76 5/8"	(1945)	114 1/4"	(2901)	56.38	(5.24)
ATS7074	76 5/8"	(1945)	122 1/4"	(3104)	60.64	(5.63)
ATS7080	76 5/8"	(1945)	130 1/4"	(3308)	64.89	(6.03)
ATS7407	80 5/8"	(2047)	43 1/4"	(1098)	19.35	(1.80)
ATS7410	80 5/8"	(2047)	48 1/4"	(1225)	22.15	(2.06)
ATS7420	80 5/8"	(2047)	60 1/4"	(1530)	28.86	(2.68)
ATS7424	80 5/8"	(2047)	64 1/4"	(1631)	31.10	(2.89)
ATS7428	80 5/8"	(2047)	68 1/4"	(1733)	33.34	(3.10)
ATS7430	80 5/8"	(2047)	72 1/4"	(1834)	35.58	(3.31)
ATS7434	80 5/8"	(2047)	76 1/4"	(1936)	37.82	(3.51)
ATS8007	88 5/8"	(2250)	47 1/4"	(1199)	23.20	(2.16)
ATS8010	88 5/8"	(2250)	52 1/4"	(1326)	26.28	(2.44)
ATS8020	88 5/8"	(2250)	64 1/4"	(1631)	33.66	(3.13)
ATS8024	88 5/8"	(2250)	68 1/4"	(1733)	36.12	(3.36)
ATS8028	88 5/8"	(2250)	72 1/4"	(1834)	38.58	(3.58)
ATS8030	88 5/8"	(2250)	76 1/4"	(1936)	41.04	(3.81)

• Dimensions in parentheses are in millimeters or square meters.

Direct-Set Specialty Window Details

Scale 1 1/2" (38) = 1'-0" (305) – 1:8

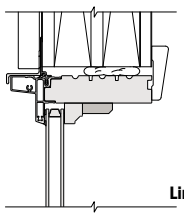

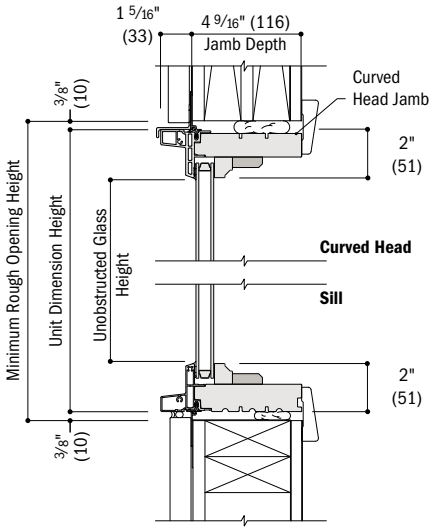

Vertical Section

Sash-Set Specialty Window Details

Scale 1 1/2" (38) = 1'-0" (305) – 1:8

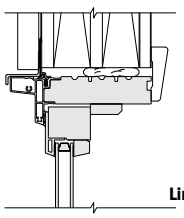

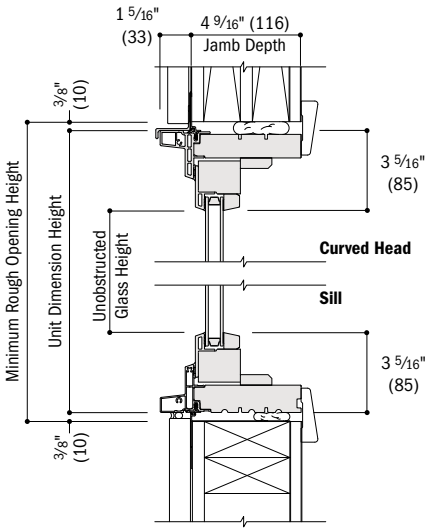

Vertical Section

Both lineal and curved head jambs are shown. Choose detail based on your specialty window shape.

Direct-set specialty and sash-set specialty windows are available in both 4 9/16" (116) and 6 9/16" (167) base jamb depths.

Oval windows are only available direct-set.

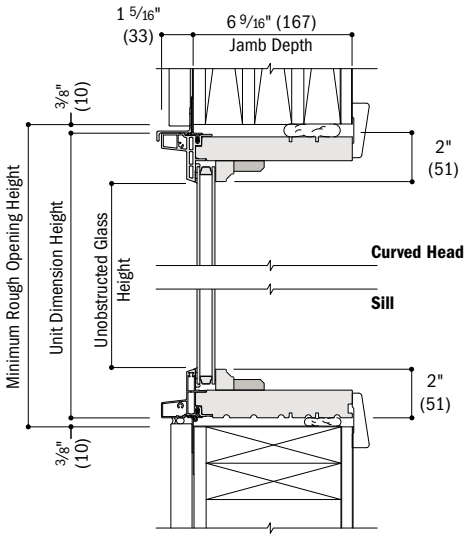

Vertical Section

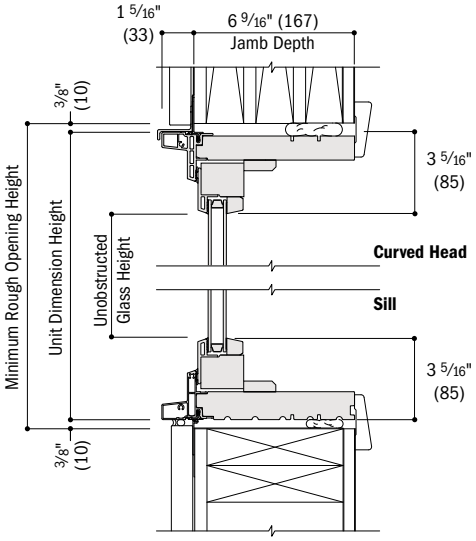

Vertical Section

See page 112 for joining details.

- 4 9/16" (116) and 6 9/16" (167) base jamb depth measurements are from back side of installation flange.
- Light-colored areas are parts included with window. Dark-colored areas are additional Andersen® parts required to complete window assembly as shown.
- Dimensions in parentheses are in millimeters.
- **Minimum rough openings may need to be increased to allow for use of building wraps, flashing, sill panning, brackets, fasteners or other items. See installation information on pages 226-227.**
- Details are for illustration only and are not intended to represent product installation methods or materials. Refer to product installation instructions at andersenwindows.com.

Horizontal (stack) Joining Details

Scale 1 1/2" (38) = 1'-0" (305) – 1:8

Windows can be joined to other windows using clip or 4 9/16" (116) fiberglass joining materials. Specialty windows can be joined over patio doors using fiberglass joining material for 4 9/16" (116) and 6 9/16" (167) base jamb depths. For factory-joined specialty-to-specialty window combinations, 4 9/16" (116) or 6 9/16" (167) Laminated veneer Lumber (LVL) joining material will be used. For additional window combinations, see pages 60-62.

Overall "Specialty Window/Window" or "Specialty Window/Door" Dimension Height – Sum of individual "specialty window/window" or "specialty window/door" heights plus 3/4" (19) per join.

Overall Minimum Rough Opening Height – Overall dimension height plus 3/4" (19).

For more information on joining, refer to the combination designs section starting on page 196.

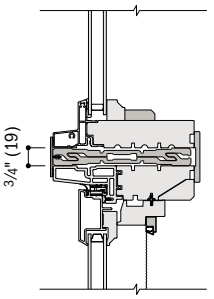

Direct-Set Specialty Over Casement/Awning
Fiberglass

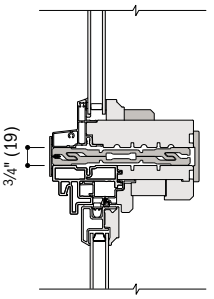

Direct-Set Specialty Over Double-Hung
Fiberglass

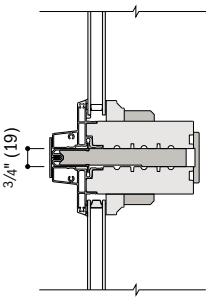

Direct-Set Specialty Over Direct-Set Specialty
LVL (Factory-Joined)

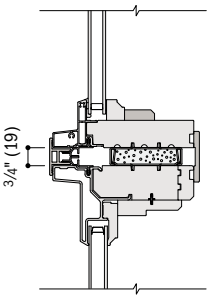

Direct-Set Specialty Over Picture
Clip

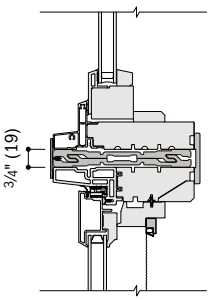

Sash-Set Specialty Over Casement/Awning
Fiberglass

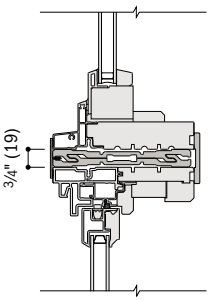

Sash-Set Specialty Over Double-Hung
Fiberglass

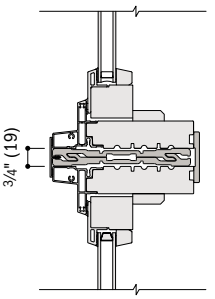

Sash-Set Specialty Over Sash-Set Specialty
Fiberglass

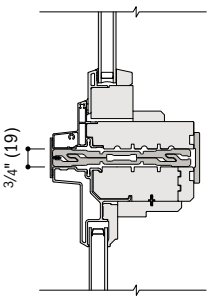

Sash-Set Specialty Over Picture
Fiberglass

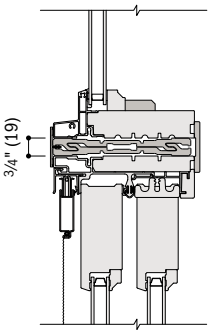

Direct-Set Specialty Over Gliding Patio Door
Fiberglass

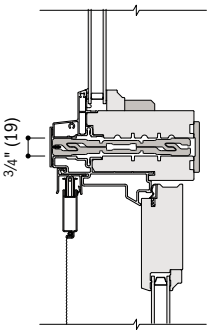

Direct-Set Specialty Over Hinged Inswing Patio Door
Fiberglass – 4 9/16" (116) Base Jamb Depth

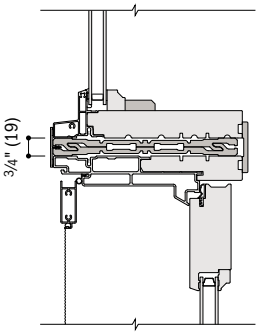

Direct-Set Specialty Over Hinged Inswing Patio Door
Fiberglass – 6 9/16" (167) Base Jamb Depth

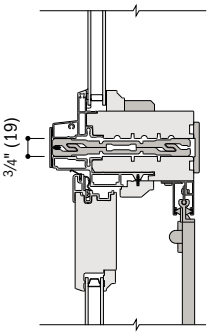

Direct-Set Specialty Over Hinged Outswing Patio Door
Fiberglass

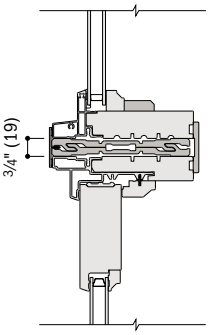

Direct-Set Specialty Over Patio Door Sidelight
Fiberglass

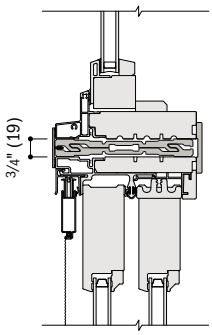

Sash-Set Specialty Over Gliding Patio Door
Fiberglass

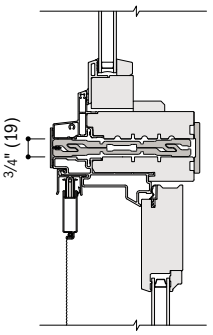

Sash-Set Specialty Over Hinged Inswing Patio Door
Fiberglass – 4 9/16" (116) Base Jamb Depth

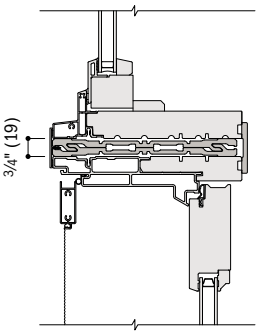

Sash-Set Specialty Over Hinged Inswing Patio Door
Fiberglass – 6 9/16" (167) Base Jamb Depth

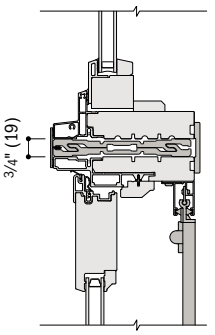

Sash-Set Specialty Over Hinged Outswing Patio Door
Fiberglass

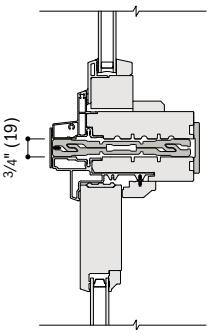

Sash-Set Specialty Over Patio Door Sidelight
Fiberglass

- Light-colored areas are parts included with window. Dark-colored areas are additional Andersen® parts required to complete window assembly as shown.
- Dimensions in parentheses are in millimeters.
- **Minimum rough openings may need to be increased to allow for use of building wraps, flashing, sill panning, brackets, fasteners or other items. See installation information on pages 226-227.**
- Details are for illustration only and are not intended to represent product installation methods or materials. Refer to product installation instructions at andersenwindows.com.
- Structural performance of any combination is only as high as the lowest structural performance of any individual product or join in the combination.

COMPLEMENTARY CASEMENT WINDOWS

Custom Sizes 116
Window Details 117-118
Product Performance 206

CUSTOM SIZING
in ⅛" (3) increments

CUSTOM SIZES

Dimensions in parentheses are in millimeters.

COMPLEMENTARY CASEMENT WINDOWS

FEATURES

FRAME

A Heavy-duty extruded aluminum cladding protects the frame exterior, providing low-maintenance durability. Standard cladding finish meets AAMA 2604. An optional finish that meets the AAMA 2605 standard is also available.

B Wood frame members are treated with a water-repellent preservative for long-lasting* protection and performance.

Installation flange extends 1½" (38) around the perimeter of the unit for positioning and locating. Installation clips are standard for increased structural anchoring to building members. Mounted around the frame perimeter, the clips rotate into position and can be bent into place against the framing members to suit all jamb conditions.

C Interior stops are unfinished. Low-maintenance prefinished white, dark bronze and black interiors are also available.

SASH

D Wood core members provide excellent structural stability and energy efficiency.

E Heavy-duty extruded aluminum cladding protects the sash exterior, providing low-maintenance durability.

F Weatherstrip throughout the unit provides a long-lasting,* energy-efficient seal. Rain skirt is factory installed on the perimeter of the sash.

GLASS

G In addition to stainless steel glass spacers, black or white glass spacers are available to allow the spacer to blend in with the unit color.

H Silicone glazing bead combined with two-sided silicone tape provide superior weathertightness.

I High-Performance options include:

- Low-E4® glass
- Low-E4 HeatLock® glass
- Low-E4 SmartSun™ glass
- Low-E4 SmartSun HeatLock glass
- Low-E4 Sun glass

Tempered and other glass options are available; contact your Andersen supplier.

A removable translucent film helps shield the glass from damage during delivery and construction, and simplifies finishing at the job site.

Patterned Glass

Patterned glass options are available. See page 15 for more details.

EXTERIORS & INTERIORS

EXTERIOR COLORS

White | Canvas | Prairie Grass | Sandtone | Terratone | Cocoa Bean

Dark Bronze | Red Rock | Forest Green | Dove Gray | Black

For custom colors, contact your Andersen supplier.

INTERIOR WOOD SPECIES

Pine | Maple | Vertical Grain Douglas Fir | Oak | Mahogany**

Alder | Cherry

For mixed grain Douglas fir, hickory, white oak and walnut, contact your Andersen supplier. All wood interiors are unfinished unless a paint color is specified. Naturally occurring variations in grain, color and texture of wood make each window one of a kind.

INTERIOR PAINT COLORS

White | Birch Bark | Primed (for paint)

Also available in 11 exterior colors shown above. Painted colors on pine. For custom colors and painted colors on maple, contact your Andersen supplier.

HARDWARE Sold Separately

CONTEMPORARY FOLDING

Black | Bright Brass
Oil Rubbed Bronze | **Satin Nickel**
Stone | White

TRADITIONAL FOLDING

Antique Brass | Black | Bright Brass
Distressed Bronze | Distressed Nickel
Oil Rubbed Bronze | Satin Nickel
Stone | White

Folding handles avoid interference with window treatments.

CLASSIC SERIES™

Stone | **White**

ESTATE™

Antique Brass | Bright Brass
Distressed Bronze | Distressed Nickel
Oil Rubbed Bronze | Satin Nickel

Bold name denotes finish shown.

HARDWARE FINISHES

Antique Brass | Black | Bright Brass | Distressed Bronze | Distressed Nickel

Oil Rubbed Bronze | Satin Nickel | Stone | White

Distressed bronze and oil rubbed bronze are "living" finishes that will change with time and use.
Printing limitations prevent exact replication of colors and finishes.
See your Andersen supplier for actual color and finish samples.
Dimensions in parentheses are in millimeters.

*Visit andersenwindows.com/warranty for details.
**Actual wood species is either Sapele or Sipo, both non-endangered species grown in Africa, with color and characteristics similar to Central American mahoganies.

HARDWARE

Smooth Control Hardware System

The smooth control hardware system employs a worm gear drive for easy operation. Units with a wash mode have hinges that move the sash away from the frame to provide easier glass cleaning on rectangular units. Arch and Springline™ casement units use the same smooth control hardware system with stainless steel butt hinges for smooth operation. Hardware option and finish must be specified. Operator handle and cover sold separately.

Single-Actuation Casement Lock

A single-actuation lock easily releases all locking points on the casement sash while the reach-out action eliminates binding when closing. The lock handle is offered in finishes that coordinate with your specified hardware option.

FRENCH CASEMENT

Andersen® complementary French casements allow both sash to swing outward from the center, eliminating a center mullion post. They offer smooth operating multi-point locking mechanisms and hinges. The multi-point lock is activated with a single turn of a handle that simultaneously secures both sash. French casement windows have a unique locking handle that's available in antique brass, black, bright brass, oil rubbed bronze, satin nickel, stone and white finishes.

ACCESSORIES Sold Separately

FRAME

Extension Jambs

Complementary casement jamb depth is 3 3/8" (86). Extension base jambs are available in 1/16" (1.5) increments between 4 9/16" (116) and 7 1/8" (181). Additional dimensions are available. Contact your Andersen supplier for more information. Extension jambs are available in all wood species and interior colors. Available for job site application or can be factory applied.

HARDWARE

Corrosion-Resistant Components

Corrosion-resistant hinge and operator arm hardware is designed for applications in harsh and corrosive environments such as heavy industrial or coastal areas.* Shown above on a 400 Series casement window.

Window Opening Control Device

A window opening control device is available, which limits sash travel to less than 4" (102) when the window is first opened. Available factory applied, or as a field-applied kit in black, stone and white. Not available for French casement windows.

SPECIAL USE OPERATOR HANDLES

Available in Classic Series™ design only.

Compact Operator Handle

Specially designed for use in situations where blinds or other window treatments interfere with standard operator handle. Available in white or stone finish.

Easy-Grip Handle

Larger knob makes it easier to grip and operate. Available in white or stone finish.

Operator Spline Cover

An operator spline cover is an attractive cap that covers the roto operator stud when the handle has been removed to control access or operation of the window. The operator spline cover should not be used on any window designated or intended for emergency escape or rescue. Please consult your local building code official for local egress code requirements.

Metal T-Handle

Our smallest operator handle, the metal T-handle, may make it more difficult for young children (5 and under) to open the window. For more information on child safety, write:

Andersen Corporation
LookOut For Kids® Program
100 Fourth Avenue North
Bayport, MN 55003
Call **800-313-8889** or email
lofk@andersencorp.com.

INSECT SCREENS

TruScene® Insect Screens

Our TruScene insect screens let in over 25% more fresh air** and provide 50% greater clarity than Andersen conventional insect screens, all while keeping out unwanted small insects. For complementary casement windows, TruScene frames are available in white, stone, dark bronze and black as well as pine, maple and oak wood veneers.

Conventional Insect Screens

Conventional insect screens have black fiberglass screen mesh. Optional charcoal powder-coated aluminum screen mesh is available. Frames are available in white, stone, dark bronze and black.

CAUTION:

- Do not paint weatherstrip.
- Creosote-based stains should not come in contact with Andersen products.
- Abrasive cleaners or solutions containing corrosive solvents should not be used on Andersen products.

*Visit andersenwindows.com/warranty for details.
**TruScene insect screens let in over 25% more fresh air than standard Andersen fiberglass insect screens.
Dimensions in parentheses are in millimeters.

COMPLEMENTARY CASEMENT WINDOWS

Shapes and Sizes

Choose left, right or stationary as viewed from the exterior. Standard sizes are available for casement windows along with the custom sizing shown below. Picture and transom windows are also available. For standard sizes, minimum rough opening dimensions and opening specifications, contact your Andersen supplier. Complementary casement windows are designed to be standalone feature windows and cannot be directly joined to A-Series windows or doors.

Custom-size windows are available in 1/8" (3) increments between minimum and maximum widths and heights. Some restrictions apply. Standard sizes are also available.

French Casement

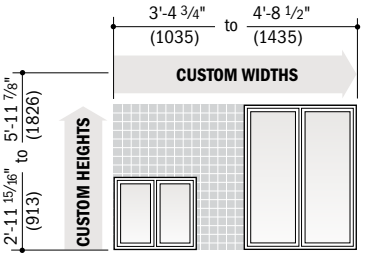

Springline™ French Casement

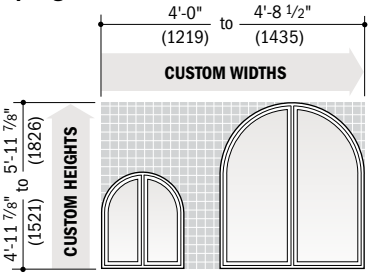

Arch French Casement

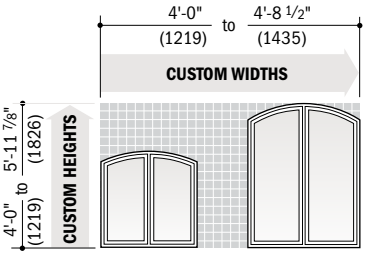

Springline™ Casement*

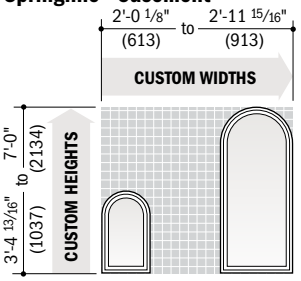

Springline™ Flanker Casement*

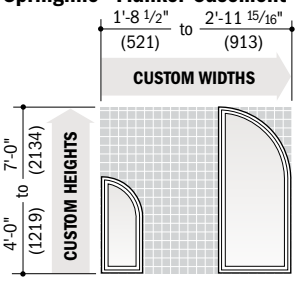

Twin Springline™ Casement*

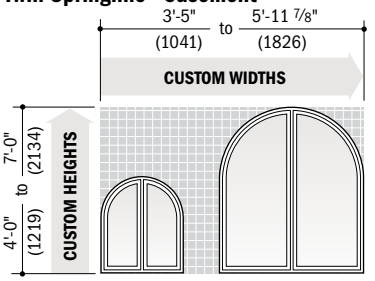

Arch Casement*

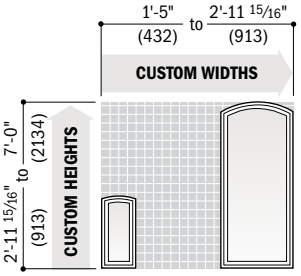

Twin Arch Casement*

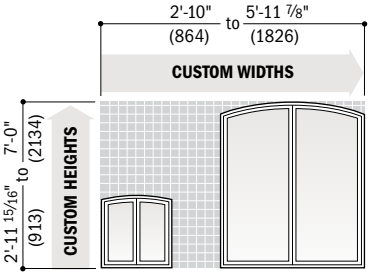

Triple Arch Casement*

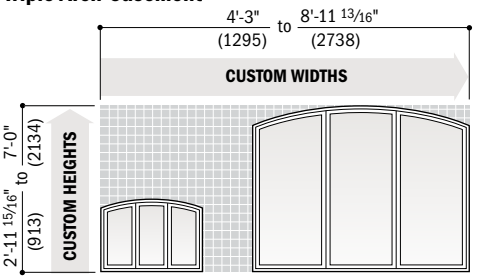

Trapezoid Casement*

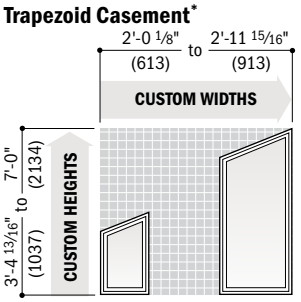

Unequal Leg Arch Casement

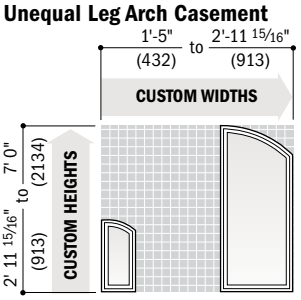

Casement

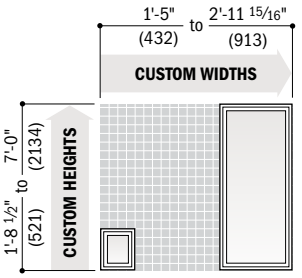

• Rough openings may need to be increased to allow for use of building wraps, flashing, sill panning, brackets, fasteners or other items. See pages 226-227 for more details.
• Dimensions in parentheses are in millimeters.
*For exterior wall cladding that extends beyond the face of the window, there may be a reduction in the amount of opening "swing" when the top of the sash touches the wall cladding.

Clad Complementary French Casement Window Details – Venting

Scale 1½" (38) = 1'-0" (305) — 1:8

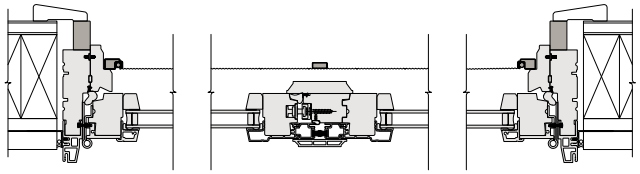

Horizontal Section
French Springline™ Casement

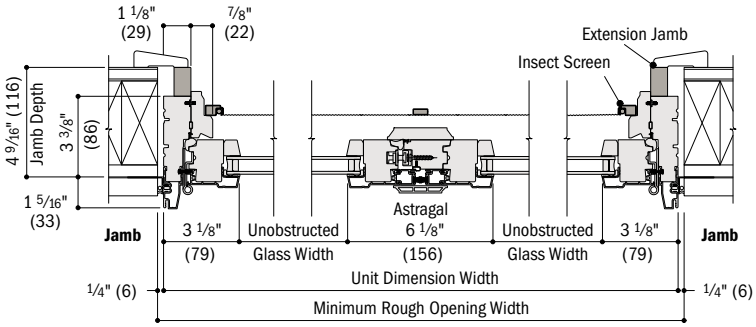

Horizontal Section
French Casement and French Arch Casement

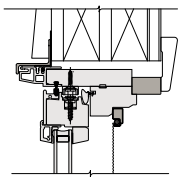

Head - Curved
French Springline™ Casement and French Arch Casement

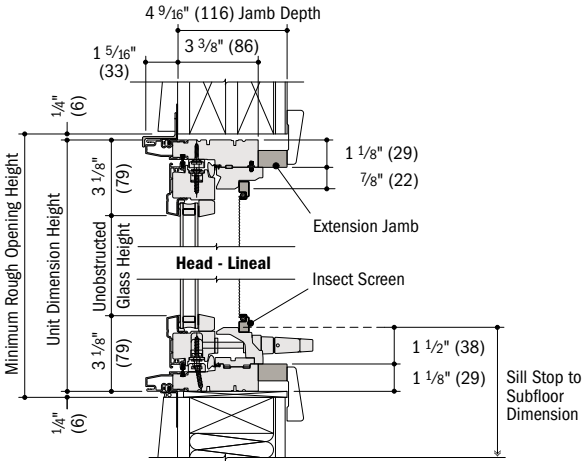

Sill

Vertical Section
French Casement and French Arch Casement

Clad Complementary French Casement Window Details – Stationary

Scale 1½" (38) = 1'-0" (305) — 1:8

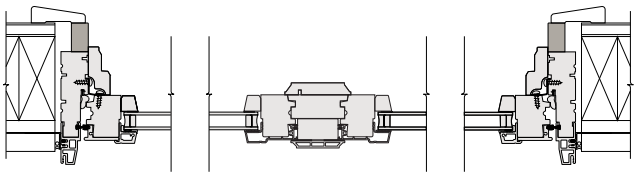

Horizontal Section
French Springline™ Casement

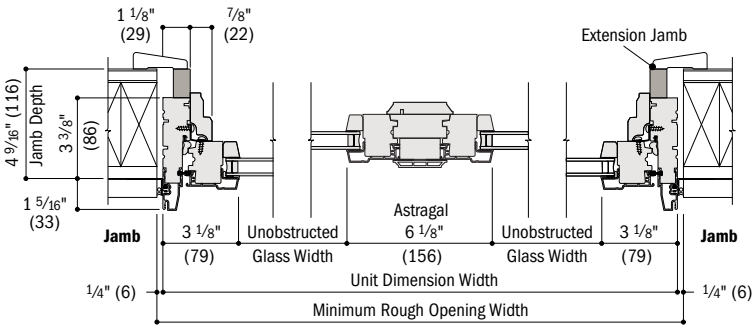

Horizontal Section
French Casement and French Arch Casement

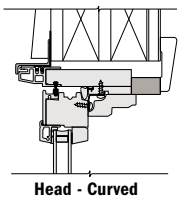

Head - Curved
French Springline™ and French Arch Casement

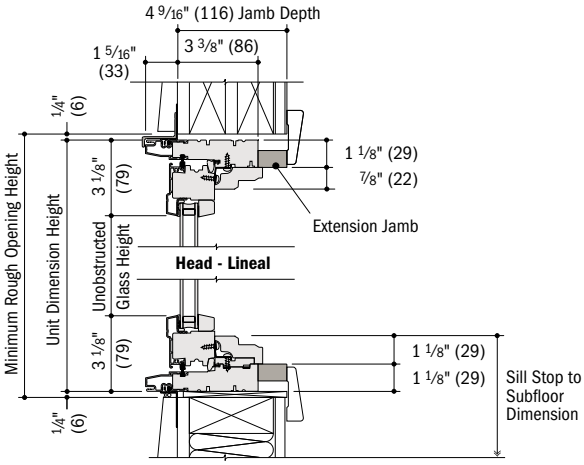

Sill

Vertical Section
French Casement and French Arch Casement

- 4 9/16" (116) overall jamb depth and 3 3/8" (86) base jamb depth measurements are from back side of installation flange.
- Light-colored areas are parts included with window. Dark-colored areas are additional Andersen® parts required to complete window assembly as shown.
- Dimensions in parentheses are in millimeters.
- **Minimum rough openings may need to be increased to allow for use of building wraps, flashing, sill panning, brackets, fasteners or other items. See installation information on pages 226-227.**
- Details are for illustration only and are not intended to represent product installation methods or materials. Refer to product installation instructions at andersenwindows.com.

Clad Complementary Casement Window Details – Venting

Scale 1½" (38) = 1'-0" (305) – 1:8

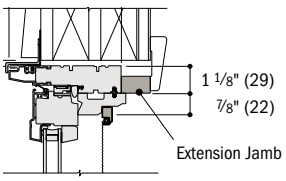

Head - Lineal

Trapezoid Casement

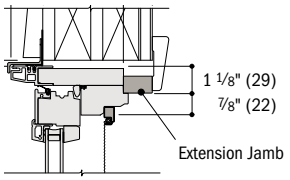

Head - Curved

Arch Casement, Unequal Leg Arch Casement, Springline™ Casement and Springline Flanker Casement

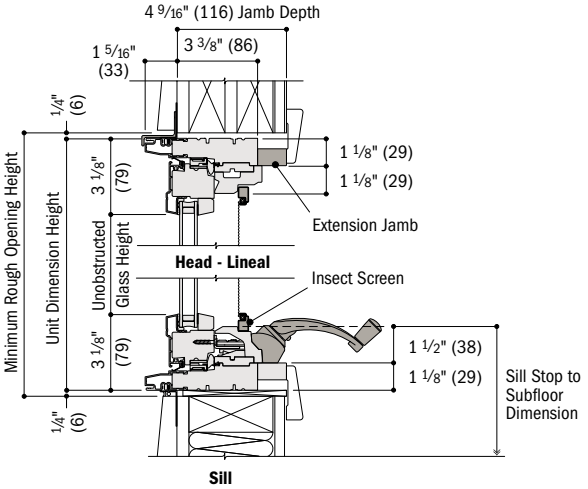

Vertical Section

Casement

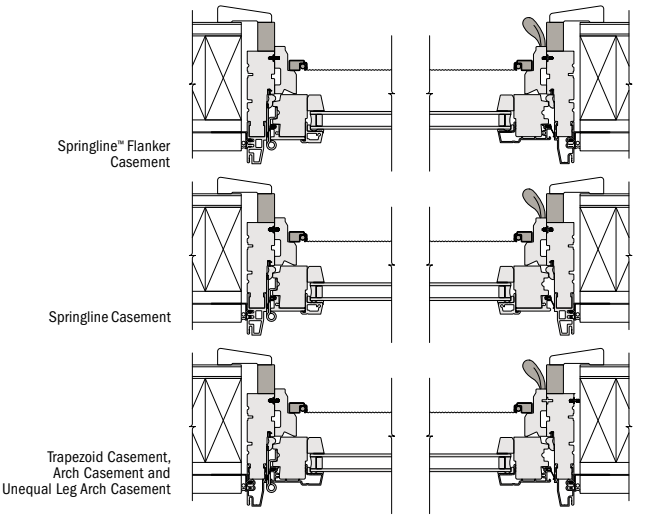

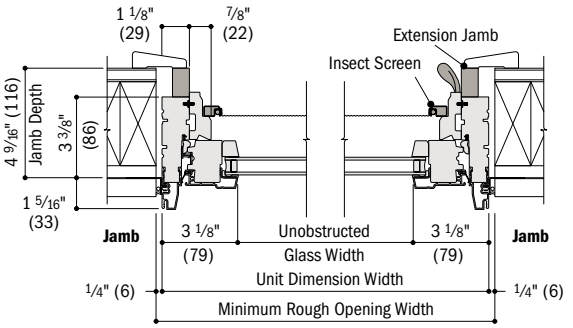

Horizontal Section

Casement

Clad Complementary Casement Window Details – Stationary

Scale 1½" (38) = 1'-0" (305) – 1:8

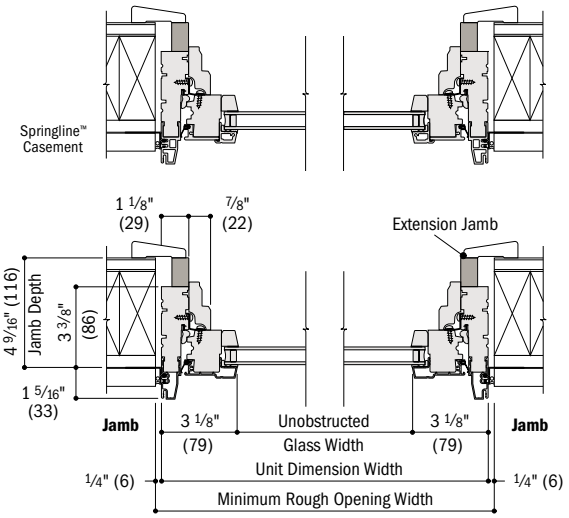

Horizontal Section

Casement, Trapezoid Casement, Arch Casement and Unequal Leg Arch Casement

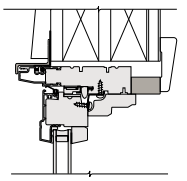

Head - Lineal

Trapezoid Casement

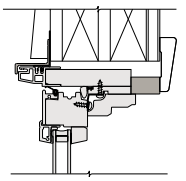

Head - Curved

Arch Casement, Unequal Leg Arch Casement, Springline™ Casement and Springline Flanker Casements

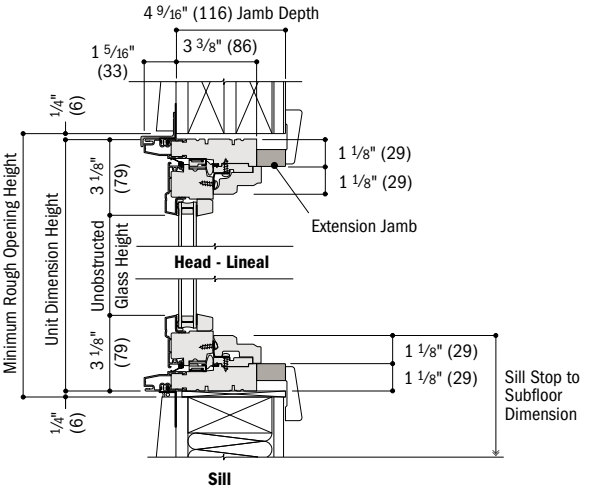

Vertical Section

Casement

- 4 9/16" (116) overall jamb depth and 3 3/8" (86) base jamb depth measurements are from back side of installation flange.
- Light-colored areas are parts included with window. Dark-colored areas are additional Andersen® parts required to complete window assembly as shown.
- Dimensions in parentheses are in millimeters.
- **Minimum rough openings may need to be increased to allow for use of building wraps, flashing, sill panning, brackets, fasteners or other items. See installation information on pages 226-227.**
- Details are for illustration only and are not intended to represent product installation methods or materials.

Refer to product installation instructions at andersenwindows.com.

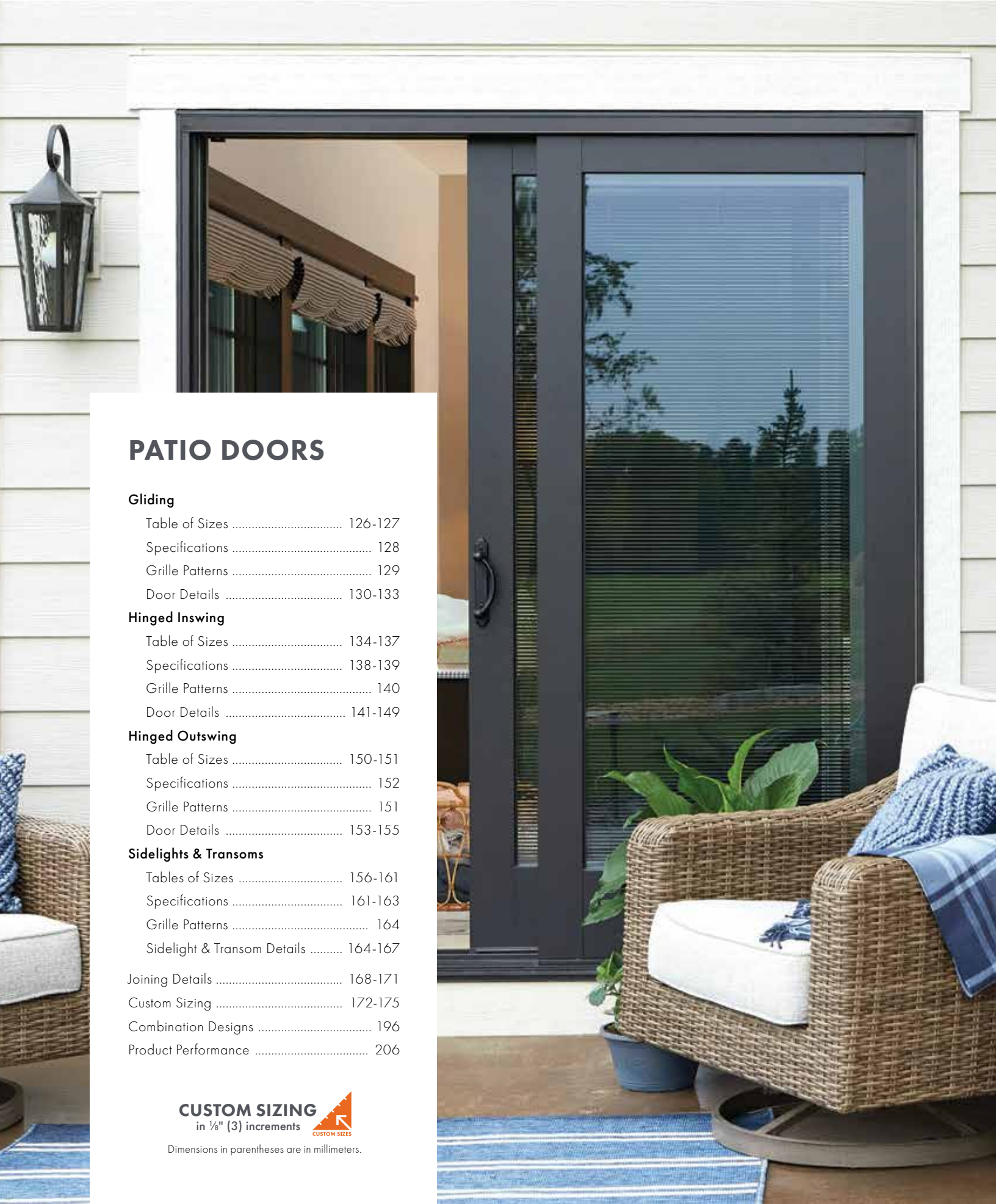

PATIO DOORS

Gliding
- Table of Sizes 126-127
- Specifications 128
- Grille Patterns 129
- Door Details 130-133

Hinged Inswing
- Table of Sizes 134-137
- Specifications 138-139
- Grille Patterns 140
- Door Details 141-149

Hinged Outswing
- Table of Sizes 150-151
- Specifications 152
- Grille Patterns 151
- Door Details 153-155

Sidelights & Transoms
- Tables of Sizes 156-161
- Specifications 161-163
- Grille Patterns 164
- Sidelight & Transom Details 164-167

Joining Details 168-171
Custom Sizing 172-175
Combination Designs 196
Product Performance 206

CUSTOM SIZING
in ⅛" (3) increments
CUSTOM SIZES

Dimensions in parentheses are in millimeters.

FEATURES

GLIDING PATIO DOORS

FRAME

A The frame is constructed with a wood core and a fiberglass exterior. This construction produces a rigid frame and a low-maintenance, durable exterior.

B Wood members are treated with a water-repellent preservative for long-lasting* protection and performance.

The interior wood jamb has an extension jamb kerf, making it easy to add interior extension jambs to match the wall depth.

C The weather seal is made from a flexible polyethylene leaf with a urethane foam core on the sill and stationary side jambs, and a polypropylene fin weatherstrip on the head and operating side jambs, creating a positive seal between the frame and panels. This system provides a long-lasting,* energy-efficient barrier against wind, water and dust.

SILL

D The one-piece fiberglass design provides superior water management. The nonconductive fiberglass construction enhances energy performance, and its superior strength eliminates the need for a sill support.

The slip- and wear-resistant poly bead finish is available in either a neutral gray or dark bronze color.

The roller track has a stainless steel cap that resists denting for smooth, reliable operation.

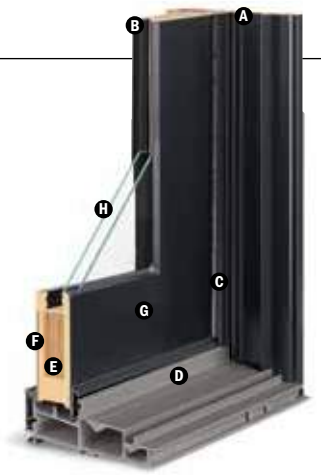

Contemporary Panel

Traditional Panel

PANEL

E Panel stiles and rails are constructed of an engineered Laminated Veneer Lumber (LVL) core. This LVL core provides strength and helps prevent warping for consistent, smooth operation.

Now available with contemporary panels in addition to traditional panels. Contemporary panels feature 5 5/8" (143) stiles and top rail with a 6 1/4" (159) bottom rail and contemporary glass stops. Traditional panels feature 5 5/8" (143) stiles and top rail with a 10 1/2" (267) bottom rail and traditional glass stops.

F Interior panel surfaces are constructed from premium wood veneer available in pine, maple, vertical grain Douglas fir, oak, mahogany** and cherry. All prefinished interiors use water-based paints and stains.

G The exterior of the wood panel is protected with a Flexacron® paint system; this stabilized polyester paint is electrostatically applied to penetrate all exterior surfaces for maximum protection and a lustrous, low-maintenance finish.

Dual corrosion-resistant* ball-bearing rollers on the door panels provide smooth gliding operation with self-contained leveling adjusters.

Dual ball-bearing rollers have deep grooves to increase engagement with the roller track and resist lateral movement.

A parting stop bracket adds strength to the door by reinforcing the top of the panels.

Flexible Seal

A full-length combination weatherstrip/interlock system provides a flexible seal at the meeting stile. Shown above on a 400 Series Frenchwood® gliding patio door.

CONFIGURATIONS

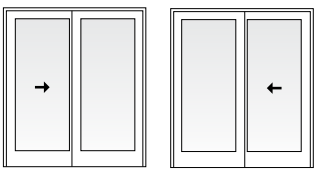

Two-Panel

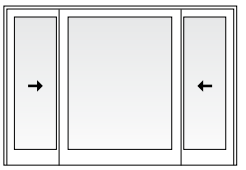

Three-Panel

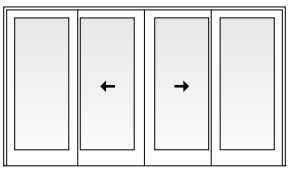

Four-Panel

H GLASS

See Common Features on page 123 for details.

Blinds-Between-the-Glass

Blinds-between-the-glass are available for select door sizes when ordered with Low-E4® tempered glass and any exterior or interior color. White or slate gray 1/2" (13) aluminum slat blinds come mounted between the glass. Available in 3368, 33611, 6068, 60611, 111068-4, 1110611-4, 2968, 5068 and 91068-4 door sizes.

HARDWARE

Multi-Point Locking System for Standard Hardware

The multi-point locking system for standard hardware features a unique reachout design that pulls the door panel tightly closed for a weathertight seal and enhanced security.

Two-Point Locking System for Flush Hardware

The two-point locking system for flush hardware provides intuitive adjustment. Equipped with laminated stainless steel hooks and an anti-slam device to prevent damage to the side jamb.

PERFORMANCE

See Common Features on page 123 for details.

*Visit andersenwindows.com/warranty for details.
**Actual wood species is either Sapele or Sipo, both non-endangered species grown in Africa, with color and characteristics similar to Central American mahoganies.
"Flexacron" is a registered trademark of PPG Industries, Inc.
Andersen patio doors are not intended for use as entrance doors.
Dimensions in parentheses are in millimeters.

FEATURES

HINGED INSWING PATIO DOORS

FRAME

A The frame is constructed with a wood core and a fiberglass exterior. This construction produces a rigid frame and a low-maintenance, durable exterior.

B Wood members are treated with a water-repellent preservative for long-lasting* protection and performance.

The interior wood jamb has an extension jamb kerf, making it easy to add interior extension jambs to match the wall depth.

Hinged inswing patio doors are available in 4 9/16" (116) and 6 9/16" (167) base jamb depths.

SILL

C This one-piece fiberglass design provides superior water management. The nonconductive fiberglass construction enhances energy performance, and its superior strength eliminates the need for a sill support.

The slip- and wear-resistant poly bead finish is available in either a neutral gray or dark bronze color.

PANEL

D Panel stiles and rails are constructed of an engineered Laminated Veneer Lumber (LVL) core. This LVL core provides strength and helps prevent warping for consistent, smooth operation.

Now available with contemporary panels in addition to traditional panels. Contemporary panels feature 5 5/8" (143) stiles and top rail with a 6 1/4" (159) bottom rail and contemporary glass stops. Traditional panels feature 5 5/8" (143) stiles and top rail with a 10 1/2" (267) bottom rail and traditional glass stops.

E Interior panel surfaces are constructed from premium wood veneer available in pine, maple, vertical grain Douglas fir, oak, mahogany** and cherry. All prefinished interiors use water-based paints and stains.

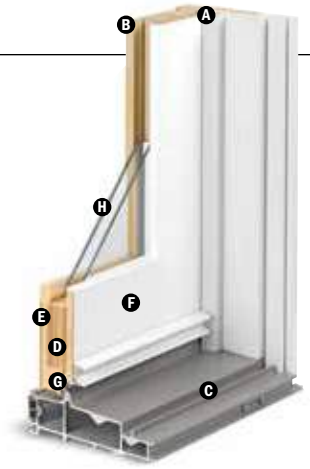

Contemporary Panel

Traditional Panel

F The exterior of the wood panel is protected with a Flexacron® paint system; this stabilized polyester paint is electrostatically applied to penetrate all exterior surfaces for maximum protection and a lustrous, low-maintenance finish.

G Factory-applied, one-piece (welded corners), compression-type weatherstrip made from a durable thermoplastic material is attached directly to the panel, not the frame, creating a continuous seal around the panel to provide maximum effectiveness against air and water infiltration. This system provides a long-lasting*, energy-efficient barrier against wind, water and dust.

Two-panel doors are available with one or two active panels. For doors with one active panel, hinges can be located along either the jamb or astragal.

Adjustable Hinges

Adjustable hinges have ball-bearing pivots for smooth, frictionless movement and feature easy horizontal and vertical adjustments, plus release tabs for easy panel removal. Available in finishes that coordinate with most trim set hardware finishes.

Removable Panels

Panels can be easily removed with the unique panel-release tab on the hinge. Release tabs are covered with a cap for a clean appearance. This release feature is ideal for transporting large units up stairs or to other hard-to-reach areas.

H GLASS

See Common Features on page 123 for details.

Blinds-Between-the-Glass

Blinds-between-the-glass are available for select door sizes when ordered with Low-E4® tempered glass and any exterior or interior color. White or slate gray 1/2" (13) aluminum slat blinds come mounted between the glass. Available in 2768, 27611, 5068, 50611, 2968, 5468, 71168, 3168, 31611, 6068, 60611, 81168 and 811611 door sizes.

HARDWARE

Multi-Point Locking System

Hinged doors have a multi-point locking system that combines hook bolts with a center deadbolt. This system provides added weathertightness and enhanced security.

Optional Corrosion-Resistant Hardware

An optional corrosion-resistant locking mechanism is available and recommended for applications within two miles of the coast and other harsh environments.*

PERFORMANCE

See Common Features on page 123 for details.

*Visit andersenwindows.com/warranty for details.
**Actual wood species is either Sapele or Sipo, both non-endangered species grown in Africa, with color and characteristics similar to Central American mahoganies.
"Flexacron" is a registered trademark of PPG Industries, Inc.
Andersen patio doors are not intended for use as entrance doors.
Dimensions in parentheses are in millimeters.

FEATURES

HINGED OUTSWING PATIO DOORS

FRAME

A The frame is constructed with a wood core and a fiberglass exterior. This construction produces a rigid frame and a low-maintenance, durable exterior.

B Wood members are treated with a water-repellent preservative for long-lasting* protection and performance.

The interior wood jamb has an extension jamb kerf, making it easy to add interior extension jambs to match the wall depth.

SILL

C One-piece non-conductive fiberglass construction enhances energy performance, and its superior strength eliminates the need for a sill support. An innovative sill design provides superior water management.

The slip- and wear-resistant poly bead finish is available in either a neutral gray or dark bronze color.

PANEL

D Panel stiles and rails are constructed of an engineered Laminated Veneer Lumber (LVL) core. This LVL core provides strength and helps prevent warping for consistent, smooth operation.

Now available with contemporary panels in addition to traditional panels. Contemporary panels feature 5 5/8" (143) stiles and top rail with a 6 1/4" (159) bottom rail and contemporary glass stops. Traditional panels feature 5 5/8" (143) stiles and top rail with a 10 1/2" (267) bottom rail and traditional glass stops.

E Interior panel surfaces are constructed from premium wood veneer available in pine, maple, vertical grain Douglas fir, oak, mahogany** and cherry. All prefinished interiors use water-based paints and stains.

F The exterior of the wood panel is protected with a Flexacron® paint system; this stabilized polyester paint is electrostatically applied to penetrate all exterior surfaces for maximum protection and a lustrous, low-maintenance finish.

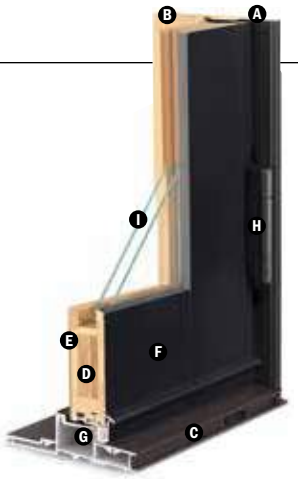

Contemporary Panel

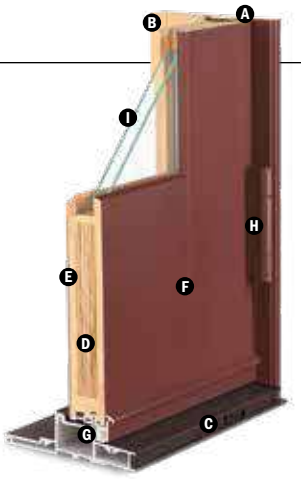

Traditional Panel

G Factory-applied, one-piece (welded corners), compression-type weatherstrip made from a durable thermoplastic material is attached directly to the panel, not the frame, creating a continuous seal around the panel to provide maximum effectiveness against air and water infiltration. This system creates a strong, long-lasting* seal that stands up to harsh weather.

Hinged outswing operating panels are available in either single left- or right-hand active or two-panel active-passive or passive-active jamb hinged.

Adjustable Hinges

H The ball-bearing hinges are covered with a corrosion-resistant powder-coated finish. Adjustable hinges have ball-bearing pivots for smooth, frictionless movement and feature easy horizontal and vertical adjustments, plus release tabs for easy panel removal. Hinges are color-matched to the exterior.

Removable Panels

Panels can be easily removed with the unique panel-release tab on the hinge. Release tabs are covered with a cap for a clean appearance. This release feature is ideal for transporting large units up stairs or to other hard-to-reach areas.

I GLASS

See Common Features on page 123 for details.

Blinds-Between-the-Glass

Blinds-between-the-glass are available for select door sizes when ordered with Low-E4® tempered glass and any exterior or interior color. White or slate gray 1/2" (13) aluminum slat blinds come mounted between the glass. Available in 2768, 27611, 5068, 50611, 2968, 5468, 3168, 31611, 6068 and 60611 door sizes.

HARDWARE

Multi-Point Locking System

Hinged doors have a multi-point locking system that combines hook bolts with a center deadbolt. This system provides added weathertightness and enhanced security.

Optional Corrosion-Resistant Hardware

An optional corrosion-resistant locking mechanism and hinges are available and recommended for applications within two miles of the coast and other harsh environments*.

PERFORMANCE

See Common Features on page 123 for details.

*Visit andersenwindows.com/warranty for details.
**Actual wood species is either Sapele or Sipo, both non-endangered species grown in Africa, with color and characteristics similar to Central American mahoganies.
"Flexacron" is a registered trademark of PPG Industries, Inc.
Andersen patio doors are not intended for use as entrance doors.
Dimensions in parentheses are in millimeters.

FEATURES

PATIO DOOR SIDELIGHTS

FRAME

The frame is constructed with a wood core and a fiberglass exterior. This construction produces a rigid frame and a low-maintenance, durable exterior.

Wood members are treated with a water-repellent preservative for long-lasting* protection and performance.

The interior wood jamb has an extension jamb kerf, making it easy to add interior extension jambs to match the wall depth.

SILL

The one-piece fiberglass design provides superior water management. The nonconductive fiberglass construction enhances energy performance, and its superior strength eliminates the need for a sill support.

The slip- and wear-resistant poly bead finish is available in either a neutral gray or dark bronze color.

PANEL

Panel stiles and rails are constructed of an engineered Laminated Veneer Lumber (LVL) core. This LVL core provides strength and helps prevent warping.

Now available with contemporary panels in addition to traditional panels. Contemporary panels feature 5 5/8" (143) stiles and top rail with a 6 1/4" (159) bottom rail and contemporary glass stops. Traditional panels feature 5 5/8" (143) stiles and top rail with a 10 1/2" (267) bottom rail and traditional glass stops.

Interior panel surfaces are constructed from premium wood veneer available in pine, maple, vertical grain Douglas fir, oak, mahogany** and cherry. All prefinished interior options use water-based paints and stains.

The exterior of the wood panel is protected with a Flexacron® paint system; this stabilized polyester paint is electrostatically applied to penetrate all exterior surfaces for maximum protection and a lustrous, low-maintenance finish.

GLASS

See Common Features below.

PERFORMANCE OPTIONS

See Common Features below.

Sidelights and sash-set transoms shown with traditional option; contemporary option also available.

PATIO DOOR TRANSOMS

FRAME

The frame is constructed with a wood core and a fiberglass exterior. This construction produces a rigid frame and a low-maintenance, durable exterior.

Wood members are treated with a water-repellent preservative for long-lasting* protection and performance.

The interior wood jamb has an extension jamb kerf, making it easy to add interior extension jambs to match the wall depth.

SASH

Direct-set transoms have glass glazed directly into the frame and maximize the glass area.

Sash-set transoms feature a fixed sash and provide common sight lines with A-Series patio doors. Available with contemporary or traditional glass stops to match your door panel option. Available in pine, maple, vertical grain Douglas fir, oak, mahogany** and cherry. All prefinished interior options use water-based paints and stains.

GLASS

See Common Features below.

PERFORMANCE

See Common Features below.

VENTING TRANSOMS

Venting transom windows are also available in sizes to fit over doors. See pages 52-53.

COMMON FEATURES

GLASS

In addition to stainless steel glass spacers, black or white glass spacers are available to allow the spacer to blend in with the unit color.

3/4" (19) dual-pane glass construction provides exceptional energy performance. High-Performance dual-pane glass options include:

- Low-E4® tempered glass
- Low-E4 HeatLock® tempered glass
- Low-E4 SmartSun™ tempered glass
- Low-E4 SmartSun HeatLock tempered glass
- Low-E4 Sun tempered glass

For even greater energy performance, 1" (25) triple-pane glass is available in these options:

- Low-E4 tempered glass
- Low-E4 Enhanced tempered glass
- Low-E4 Enhanced HeatLock tempered glass
- Low-E4 SmartSun tempered glass
- Low-E4 SmartSun Enhanced tempered glass
- Low-E4 SmartSun Enhanced HeatLock tempered glass

Additional glass options are available; see your Andersen supplier.

A removable translucent film helps shield the glass from damage during delivery and construction, and simplifies finishing at the job site.

Patterned Glass

Patterned glass options are available. See page 15 for more details.

Between-the-Glass Art Glass

Available in a variety of original patterns. For details see page 16 or visit **andersenwindows.com/artglass.**

PERFORMANCE

Performance Grade (PG) Upgrade Drop-Nose Channel

A factory-applied, patented drop-nose channel attachment is available for doors to enhance water performance without increasing the interior sill height. PG upgrades allow standard non-impact products to achieve higher performance ratings. Performance Grade (PG) ratings are more comprehensive than Design Pressure (DP) ratings for measuring product performance. For up-to-date performance information of individual products, visit **andersenwindows.com**. Shown on a hinged inswing door.

Stormwatch® PROTECTION

A-Series patio doors available with Stormwatch® Protection include impact-resistant glass in addition to structural upgrades. For a copy of the A-Series Coastal Product Guide, visit **andersenwindows.com/coastal**.

*Visit andersenwindows.com/warranty for details.
**Actual wood species is either Sapele or Sipo, both non-endangered species grown in Africa, with color and characteristics similar to Central American mahoganies.
"Flexacron" is a registered trademark of PPG Industries, Inc.
Dimensions in parentheses are in millimeters.

EXTERIORS & INTERIORS

EXTERIOR COLORS

White, Canvas, Prairie Grass, Sandtone

Terratone, Cocoa Bean, Dark Bronze, Red Rock

Forest Green, Dove Gray, Black

INTERIOR WOOD SPECIES

Pine, Maple, Vertical Grain Douglas Fir, Oak, Cherry, Mahogany*

FACTORY-FINISHED INTERIORS

Clear Coat, Honey, Cinnamon, Mocha, Russet, Espresso

All wood interiors are unfinished unless a finish is specified. Factory finishes on pine, maple and oak. Shown above on pine. Naturally occurring variations in grain, color and texture of wood make each window one of a kind.

INTERIOR PAINT COLORS

White, Birch Bark, Primed (for paint)

Canvas, Sandtone, Dark Bronze

Black

Also available in 11 exterior colors shown at left; contact your Andersen supplier. Painted colors on pine or maple.

HARDWARE Sold Separately

YUMA®
Distressed Bronze
Distressed Nickel

ENCINO®
Distressed Bronze
Distressed Nickel

NEWBURY®
Antique Brass
Bright Brass
Oil Rubbed Bronze
Satin Nickel

ANVERS®
Bright Brass
Oil Rubbed Bronze
Satin Nickel

ALBANY
Black
Stone
White

TRIBECA®
Black
Stone
White

Bold name denotes finish shown.

HARDWARE FINISHES

Antique Brass, Black, Bright Brass

Distressed Bronze, Distressed Nickel, Oil Rubbed Bronze

Satin Nickel, Stone, White

FSB® HARDWARE FOR HINGED PATIO DOORS

1035, 1075, 1076, 1102**

Black Anodized Aluminum, Satin Stainless Steel

FLUSH HARDWARE FOR GLIDING PATIO DOORS

Black, Oil Rubbed Bronze, Satin Nickel, White

Satin nickel shown.

Matching hinges available in most hardware finishes for inswing patio doors; excludes FSB hardware.

Mix-and-match interior and exterior style and finish options are available; excludes FSB and flush hardware.

Bright brass and satin nickel finishes feature a 10-year limited warranty.

Albany and Tribeca hardware are zinc die-cast with powder-coated durable finish; Yuma, Encino, Newbury and Anvers are solid forged brass..

Distressed bronze and oil rubbed bronze are "living" finishes that will change with time and use.

Printing limitations prevent exact replication of colors and finishes. See your Andersen supplier for actual color and finish samples.

"FSB" is a registered trademark of Franz Schneider Brakel GmbH & Co.

*Actual wood species is either Sapele or Sipo, both non-endangered species grown in Africa, with color and characteristics similar to Central American mahoganies.

**FSB style 1102 is not available in black anodized aluminum.

ACCESSORIES Sold Separately

FRAME

Extension Jambs

Extension jambs are available in pine, maple, vertical grain Douglas fir, oak, mahogany* and cherry precut to fit the unit. Available in 1/16" (1.5) increments up to 7 1/8" (181) and can be prefinished in six stain colors as well as all interior paint options to match the interior finish of the unit. This option is also available factory applied.

Interior extension jambs on inswing units will restrict the full opening of the door.

Threshold for Gliding and Hinged Inswing Patio Doors

A maple or oak threshold is available for finishing the interior of the sill on gliding and hinged inswing doors.

Sill Step for Hinged Outswing Patio Doors

The hinged outswing door offers an optional maple or oak sill step. Detail is shown on page 129.

Remodeler Sill Bracket for Gliding and Hinged Inswing Patio Doors

The remodeler sill bracket allows for easy installation in replacement applications with a finished interior floor. It fastens to the subfloor, and the sill snaps into the bracket, providing a secure structural installation. Detail is shown on page 129 for gliding, 141 for inswing and 153 for outswing doors.

HARDWARE

Exterior Keyed Lock

A six-pin exterior key cylinder lock is available for all doors in styles and finishes that coordinate with the hardware. This lock allows the door to be locked and unlocked from the exterior. Gliding door lock shown.

Auxiliary Foot Lock for Gliding Patio Doors

Provides an extra measure of security when the door is in a locked position. Lock can be set so the door is fully closed or partially open to provide a secure venting position. Available in all hardware finishes.

Handle Extension for Hinged Inswing and Outswing Patio Doors

Extends interior door handle an additional 1" (25) from the door panel to accommodate interior blinds or shades. The kit includes one handle extender and spindle. A second extender may be added to the spindle to increase the length an additional 1" (25) to a 2" (51) total extension. Extenders are available in finishes that coordinate with the hardware.

Strike Plate Extension for Hinged Inswing Patio Doors

Antique brass, bright brass, oil rubbed bronze and satin nickel strike plate extensions are available for: 5 1/4" (133), 6 9/16" (167) and 7 1/8" (181) wall depths.

Construction Hardware for Hinged Inswing and Outswing Patio Doors

This hardware can be used to help secure the job site during the construction phase of the project. It features an undersized escutcheon plate, which makes on-site finishing easier.

Yale® Assure Lock® Keyless Lock for Hinged Patio Doors

Monitor, lock and unlock from anywhere with the Yale Assure Lock. The sleek key-free lock includes Bluetooth® technology for key-free unlocking and is compatible with Z-Wave® for integration with a wide range of smart home platforms. See page 13 for additional details.

INSECT SCREENS

All insect screens have a long-lasting** fiberglass mesh with a charcoal finish. Insect screen frames are color matched to the exterior of the door unless otherwise noted.

Top-Hung Gliding and Gliding Insect Screens for Gliding or Hinged Inswing Patio Doors

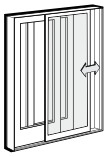

Patented square-corner joints add considerable strength to the frame members. Available in premium top-hung and conventional gliding designs. The premium top-hung insect screen has silicone-embedded glide hooks that hang from the top of the screen track, allowing it to glide smoothly and effortlessly without the interference of dust and debris. Alignment rollers on the bottom keep it in place on the track, while the perimeter bug seal helps ensure insects stay out. The conventional insect screen has bottom rollers with self-contained leveling adjusters.

Hinged Insect Screen for Hinged Inswing Patio Doors

Available for single-panel doors.

Double-Hinged Insect Screen for Hinged Inswing Patio Doors

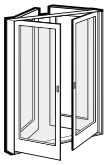

Available for two-panel jamb-hinged doors.

Retractable Insect Screen for Gliding Patio Doors

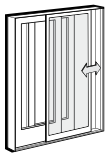

The retractable insect screen is installed on the exterior of the door and opens side to side across the width of the opening. When the insect screen is not in use, it neatly retracts into a small canister mounted on the exterior of the door. Available for two-panel doors. Please note, the retractable screen track reduces the clear opening height by 1" (25).

Retractable Insect Screen for Hinged Outswing Patio Doors

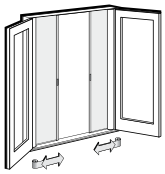

The retractable insect screen is installed on the interior of the door across the width of the opening. When the insect screen is not in use, it neatly retracts into a small canister mounted on each side of the door. Retractable insect screens are available for single-panel and two-panel doors, and in white, gold dust, pine, maple and oak finishes and six stain options to match the interior of the door. Please note, the retractable screen track reduces the clear opening height by 1" (25).

GRILLES

Grilles are available in both traditional and contemporary profiles in a variety of configurations and widths. See page 19 for details.

EXTERIOR TRIM

Available with Andersen exterior trim. See the exterior trim section starting on page 189.

*Actual wood species is either Sapele or Sipo, both non-endangered species grown in Africa, with color and characteristics similar to Central American mahoganies.

**Visit andersenwindows.com/warranty for details.

All marks are trademarks of their respective owners.

Dimensions in parentheses are in millimeters.

Table of Gliding Patio Door Sizes

Scale 1/8" (3) = 1'-0" (305) — 1:96

Door Dimension	2'-8 3/8" (822)	4'-11 1/4" (1505)	4'-11 1/4" (1505)	9'-9" (2972)	9'-9" (2972)
Minimum Rough Opening	2'-9" (838)	5'-0" (1524)	5'-0" (1524)	9'-10" (2997)	9'-10" (2997)
Unobstructed Glass (single panel only)	21 1/8" (537)	21 1/8" (537)	21 1/8" (537)	21 1/8" (537) 52" (1321) 21 1/8" (537)	21 1/8" (537)

4 heights

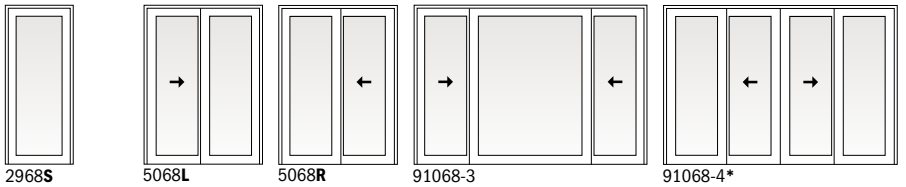

1 FWGD/FWGCD	2968**S**	5068**L**	5068**R**	91068-3	91068-4*
2 FWGD/FWGCD	29611**S**	50611**L**	50611**R**	910611-3	910611-4*
3 FWGD/FWGCD	2980**S**	5080**L**	5080**R**	91080-3	91080-4*
4 FWGD/FWGCD	29100**S**	50100**L**	50100**R**	910100-3	910100-4*

Custom-size patio doors are available in 1/8" (3) increments.

See pages 172 and 175 for custom sizes, specifications and information on shipping patio doors greater than 8' (2438).

Door Dimension	3'-2 3/8" (974)	5'-11 1/4" (1810)	5'-11 1/4" (1810)	11'-9" (3581)	11'-9" (3581)
Minimum Rough Opening	3'-3" (991)	6'-0" (1829)	6'-0" (1829)	11'-10" (3606)	11'-10" (3600)
Unobstructed Glass (single panel only)	27 1/8" (689)	27 1/8" (689)	27 1/8" (689)	27 1/8" (689) 64" (1626) 27 1/8" (689)	27 1/8" (689)

4 heights

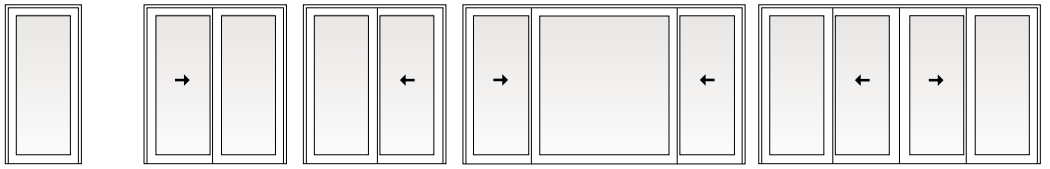

1 FWGD/FWGCD	3368**S**	6068**L**	6068**R**	111068-3	111068-4*
2 FWGD/FWGCD	33611**S**	60611**L**	60611**R**	1110611-3	1110611-4*
3 FWGD/FWGCD	3380**S**	6080**L**	6080**R**	111080-3	111080-4*
4 FWGD/FWGCD	33100**S**	60100**L**	60100**R**	1110100-3	1110100-4*

Door Dimension	3'-8 3/8" (1126)	6'-11 1/4" (2114)	6'-11 1/4" (2114)
Minimum Rough Opening	3'-9" (1067)	7'-0" (2133)	7'-0" (2133)
Unobstructed Glass (single panel only)	33 1/8" (841)	33 1/8" (841)	33 1/8" (841)

4 heights

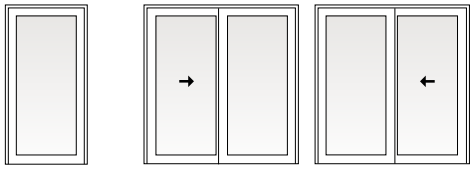

1 FWGD/FWGCD	3968**S**	7068**L**	7068**R**
2 FWGD/FWGCD	39611**S**	70611**L**	70611**R**
3 FWGD/FWGCD	3980**S**	7080**L**	7080**R**
4 FWGD/FWGCD	39100**S**	70100**L**	70100**R**

Viewed from the exterior. Arrows indicate direction of panel operation. Choose traditional (**FWGD**) or contemporary (**FWGCD**) panels. Contemporary panels shown. Stationary (**S**) patio doors can be used as an individual door or as a sidelight. Single-panel doors are factory assembled. Two-panel doors are available unassembled, or can be factory assembled and will arrive at the job site ready to install. Three- and four-panel doors are not available factory assembled.

Grille patterns shown on page 129. Details shown on pages 130-133.

Door Dimension	4'-2 3/8" (1279)	7'-11 1/4" (2419)	7'-11 1/4" (2419)	15'-9" (4801)
Minimum Rough Opening	4'-3" (1295)	8'-0" (2438)	8'-0" (2438)	15'-10" (4826)
Unobstructed Glass (single panel only)	39 1/8" (994)	39 1/8" (994)	39 1/8" (994)	39 1/8" (994)

4 heights

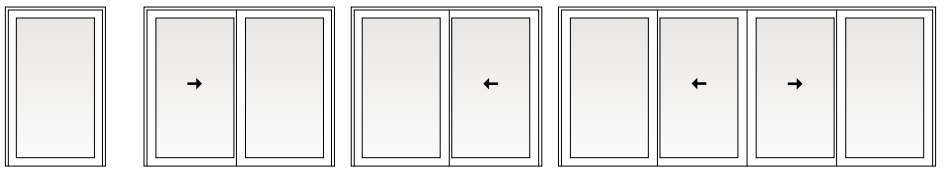

1 FWGD/FWGCD	4368**S**	8068**L**	8068**R**	151068-4*
2 FWGD/FWGCD	43611**S**	80611**L**	80611**R**	1510611-4*
3 FWGD/FWGCD	4380**S**	8080**L**	8080**R**	151080-4*
4 FWGD/FWGCD	43100**S**	80100**L**	80100**R**	1510100-4*

- "Door Dimension" always refers to outside frame-to-frame dimension.
- "**Minimum Rough Opening**" **dimensions may need to be increased to allow for use of building wraps, flashing, sill panning, brackets, fasteners or other items. See pages 226-227 for more details.**
- Dimensions in parentheses are in millimeters.

*Add 1/4" (6) to the "Minimum Rough Opening" height dimension for four-panel doors.

Four Patio Door Heights

For all four-panel gliding patio doors, add 1/4" (6) to the "Minimum Rough Opening" height dimension.

Traditional Panels

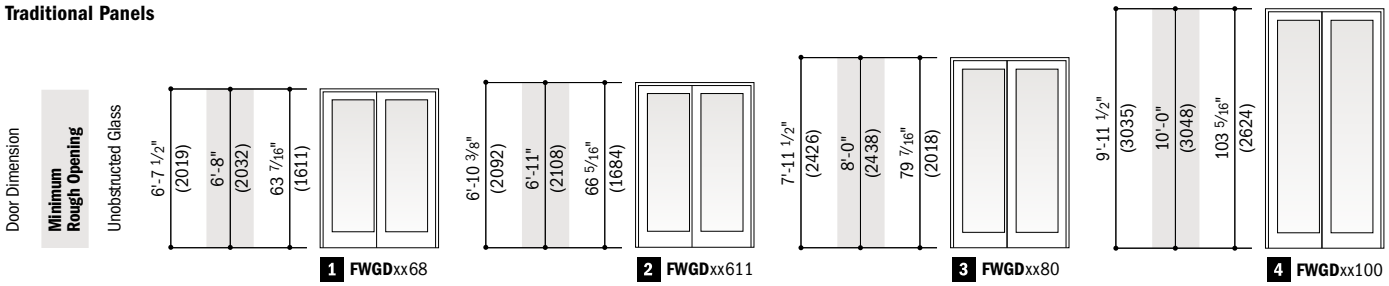

Contemporary Panels

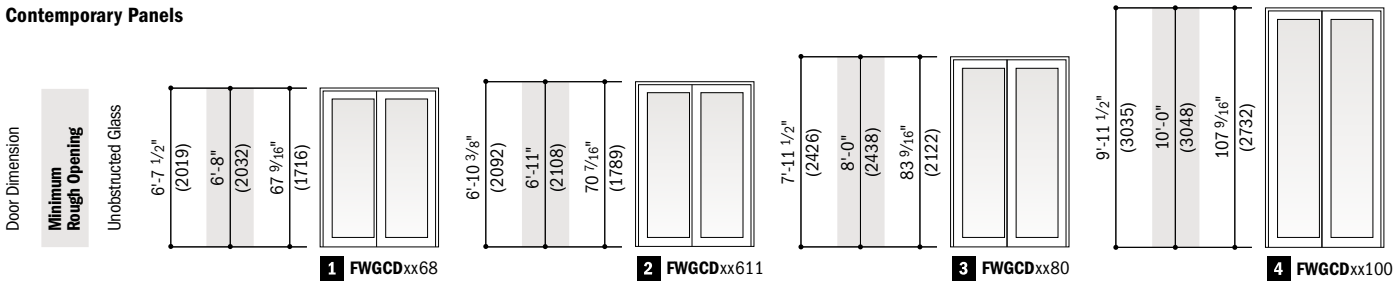

Order Designation Description

Viewed from the exterior. Traditional panels shown.

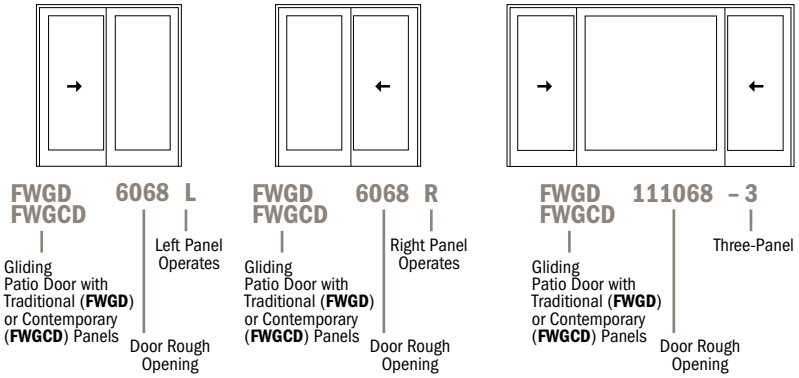

- "Door Dimension" always refers to outside frame-to-frame dimension.
- "**Minimum Rough Opening**" **dimensions may need to be increased to allow for use of building wraps, flashing, sill panning, brackets, fasteners or other items. See pages 226-227 for more details.**
- Dimensions in parentheses are in millimeters.

Gliding Patio Door Opening and Area Specifications

Door Number	Number of Panels in Open Position	Clear Opening Area Sq. Ft./(m²)		Clear Opening in Full Open Position Width Inches/(mm)		Height Inches/(mm)		Traditional Panel Glass Area Sq. Ft./(m²)		Contemporary Panel Glass Area Sq. Ft./(m²)		Vent Area Sq. Ft./(m²)		Overall Door Area Sq. Ft./(m²)	
FWGD/FWGCD2968**S**	1	-	-	-	-	-	-	9.31	(0.86)	9.91	(0.92)	-	-	17.86	(1.66)
FWGD/FWGCD3368**S**	1	-	-	-	-	-	-	11.95	(1.11)	12.73	(1.18)	-	-	21.17	(1.97)
FWGD/FWGCD3968**S**	1	-	-	-	-	-	-	14.59	(1.35)	15.54	(1.44)	-	-	24.48	(2.27)
FWGD/FWGCD4368**S**	1	-	-	-	-	-	-	17.24	(1.60)	18.36	(1.70)	-	-	27.79	(2.58)
FWGD/FWGCD29611**S**	1	-	-	-	-	-	-	9.73	(0.90)	10.33	(0.96)	-	-	18.50	(1.72)
FWGD/FWGCD33611**S**	1	-	-	-	-	-	-	12.49	(1.16)	13.27	(1.23)	-	-	21.93	(2.04)
FWGD/FWGCD39611**S**	1	-	-	-	-	-	-	15.25	(1.41)	16.20	(1.50)	-	-	25.37	(2.36)
FWGD/FWGCD43611**S**	1	-	-	-	-	-	-	18.02	(1.67)	19.14	(1.77)	-	-	28.80	(2.68)
FWGD/FWGCD2980**S**	1	-	-	-	-	-	-	11.65	(1.08)	12.26	(1.13)	-	-	21.45	(1.99)
FWGD/FWGCD3380**S**	1	-	-	-	-	-	-	14.96	(1.38)	15.74	(1.46)	-	-	21.94	(2.04)
FWGD/FWGCD3980**S**	1	-	-	-	-	-	-	18.27	(1.69)	19.22	(1.78)	-	-	29.41	(2.73)
FWGD/FWGCD4380**S**	1	-	-	-	-	-	-	21.58	(2.00)	22.71	(2.10)	-	-	33.39	(3.10)
FWGD/FWGCD29100**S**	1	-	-	-	-	-	-	15.17	(1.40)	15.78	(1.46)	-	-	26.84	(2.49)
FWGD/FWGCD33100**S**	1	-	-	-	-	-	-	19.48	(1.80)	20.26	(1.88)	-	-	31.82	(2.96)
FWGD/FWGCD39100**S**	1	-	-	-	-	-	-	23.79	(2.21)	24.74	(2.29)	-	-	36.80	(3.42)
FWGD/FWGCD43100**S**	1	-	-	-	-	-	-	28.10	(2.61)	29.23	(2.71)	-	-	41.78	(3.88)
FWGD/FWGCD5068	1	11.16	(1.04)	21 1/4"	(540)	75 1/2"	(1918)	18.61	(1.72)	19.83	(1.84)	11.16	(1.04)	32.71	(3.04)
FWGD/FWGCD6068	1	14.31	(1.33)	27 1/4"	(692)	75 1/2"	(1918)	23.90	(2.22)	25.46	(2.36)	14.31	(1.33)	39.34	(3.65)
FWGD/FWGCD7068	1	17.45	(1.62)	33 1/4"	(845)	75 1/2"	(1918)	29.19	(2.71)	31.09	(2.88)	17.45	(1.62)	45.96	(4.27)
FWGD/FWGCD8068	1	20.60	(1.91)	39 1/4"	(997)	75 1/2"	(1918)	34.47	(3.20)	36.72	(3.41)	20.60	(1.91)	52.59	(4.89)
FWGD/FWGCD91068-4	2	22.60	(2.10)	43 1/16"	(1094)	75 1/2"	(1918)	37.22	(3.45)	39.66	(3.68)	22.60	(2.10)	64.59	(6.00)
FWGD/FWGCD91068-3	1	11.16	(1.04)	21 1/4"	(540)	75 1/2"	(1918)	41.51	(3.85)	44.22	(4.10)	11.16	(1.04)	64.59	(6.00)
FWGD/FWGCD111068-4	2	28.89	(2.68)	55 1/16"	(1399)	75 1/2"	(1918)	47.80	(4.44)	50.92	(4.73)	28.89	(2.68)	77.84	(7.23)
FWGD/FWGCD111068-3	1	14.31	(1.33)	27 1/4"	(692)	75 1/2"	(1918)	52.08	(4.83)	55.49	(5.15)	14.31	(1.33)	77.84	(7.23)
FWGD/FWGCD151068-4	2	41.49	(3.86)	79 1/16"	(2008)	75 1/2"	(1918)	68.94	(6.40)	73.45	(6.82)	41.49	(3.85)	104.34	(9.69)
FWGD/FWGCD50611	1	11.58	(1.08)	21 1/4"	(540)	78 7/16"	(1992)	19.46	(1.80)	20.67	(1.92)	11.58	(1.08)	33.89	(3.15)
FWGD/FWGCD60611	1	14.85	(1.38)	27 1/4"	(692)	78 7/16"	(1992)	24.98	(2.32)	26.54	(2.46)	14.85	(1.38)	40.76	(3.79)
FWGD/FWGCD70611	1	18.12	(1.68)	33 1/4"	(845)	78 7/16"	(1992)	30.51	(2.83)	32.41	(3.01)	18.12	(1.68)	47.62	(4.42)
FWGD/FWGCD80611	1	21.39	(1.99)	39 1/4"	(997)	78 7/16"	(1992)	36.03	(3.34)	38.29	(3.55)	21.39	(1.99)	54.49	(5.06)
FWGD/FWGCD910611-4	2	23.46	(2.18)	43 1/16"	(1094)	78 7/16"	(1992)	38.91	(3.61)	41.34	(3.84)	23.46	(2.18)	66.93	(6.22)
FWGD/FWGCD910611-3	1	11.58	(1.08)	21 1/4"	(540)	78 7/16"	(1992)	43.39	(4.03)	46.10	(4.28)	11.58	(1.08)	66.93	(6.22)
FWGD/FWGCD1110611-4	2	29.99	(2.79)	55 1/16"	(1399)	78 7/16"	(1992)	49.96	(4.64)	53.09	(4.93)	29.99	(2.79)	80.66	(7.49)
FWGD/FWGCD1110611-3	1	14.85	(1.38)	27 1/4"	(692)	78 7/16"	(1992)	54.44	(5.05)	57.85	(5.37)	14.85	(1.38)	80.66	(7.49)
FWGD/FWGCD1510611-4	2	43.07	(4.00)	79 1/16"	(2008)	78 7/16"	(1992)	72.07	(6.69)	76.58	(7.11)	43.07	(4.00)	108.12	(10.04)
FWGD/FWGCD5080	1	13.52	(1.26)	21 1/4"	(540)	91 1/2"	(2324)	23.31	(2.16)	24.52	(2.27)	13.52	(1.26)	39.29	(3.65)
FWGD/FWGCD6080	1	17.33	(1.61)	27 1/4"	(692)	91 1/2"	(2324)	29.93	(2.78)	31.49	(2.92)	17.33	(1.61)	47.25	(4.39)
FWGD/FWGCD7080	1	21.15	(1.96)	33 1/4"	(845)	91 1/2"	(2324)	36.55	(3.39)	38.45	(3.57)	21.15	(1.96)	55.21	(5.13)
FWGD/FWGCD8080	1	24.96	(2.32)	39 1/4"	(997)	91 1/2"	(2324)	43.17	(4.01)	45.42	(4.21)	24.96	(2.32)	63.17	(5.87)
FWGD/FWGCD91080-4	2	27.38	(2.54)	43 1/16"	(1094)	91 1/2"	(2324)	46.61	(4.33)	49.04	(4.55)	27.38	(2.54)	77.59	(7.21)
FWGD/FWGCD91080-3	1	13.52	(1.26)	21 1/4"	(540)	91 1/2"	(2324)	51.97	(4.82)	54.69	(5.08)	13.52	(1.26)	77.59	(7.21)
FWGD/FWGCD111080-4	2	35.01	(3.25)	55 1/16"	(1399)	91 1/2"	(2324)	59.85	(5.56)	62.98	(5.85)	35.01	(3.25)	93.51	(8.69)
FWGD/FWGCD111080-3	1	17.33	(1.61)	27 1/4"	(692)	91 1/2"	(2324)	65.21	(6.05)	68.62	(6.37)	17.33	(1.61)	93.51	(8.69)
FWGD/FWGCD151080-4	2	50.27	(4.67)	79 1/16"	(2008)	91 1/2"	(2324)	86.33	(8.02)	90.84	(8.43)	50.27	(4.67)	125.34	(11.64)
FWGD/FWGCD50100	1	17.04	(1.58)	21 1/4"	(540)	115 1/2"	(2934)	30.35	(2.81)	31.56	(2.93)	17.04	(1.58)	49.17	(4.57)
FWGD/FWGCD60100	1	21.86	(2.03)	27 1/4"	(692)	115 1/2"	(2934)	38.97	(3.62)	40.53	(3.76)	21.86	(2.03)	59.13	(5.49)
FWGD/FWGCD70100	1	26.67	(2.48)	33 1/4"	(845)	115 1/2"	(2934)	47.59	(4.42)	49.49	(4.59)	26.67	(2.48)	69.09	(6.42)
FWGD/FWGCD80100	1	31.48	(2.93)	39 1/4"	(997)	115 1/2"	(2934)	56.21	(5.22)	58.46	(5.43)	31.48	(2.93)	79.04	(7.34)
FWGD/FWGCD910100-4	2	34.54	(3.21)	43 1/16"	(1094)	115 1/2"	(2934)	60.69	(5.63)	63.13	(5.86)	34.54	(3.21)	97.09	(9.02)
FWGD/FWGCD910100-3	1	17.04	(1.58)	21 1/4"	(540)	115 1/2"	(2934)	67.68	(6.28)	70.39	(6.53)	17.04	(1.58)	97.09	(9.02)
FWGD/FWGCD1110100-4	2	44.16	(4.10)	55 1/16"	(1399)	115 1/2"	(2934)	77.93	(7.23)	81.06	(7.53)	44.16	(4.10)	117.01	(10.87)
FWGD/FWGCD1110100-3	1	21.86	(2.03)	27 1/4"	(692)	115 1/2"	(2934)	84.92	(7.88)	88.32	(8.20)	21.86	(2.03)	117.01	(10.87)
FWGD/FWGCD1510100-4	2	63.41	(5.89)	79 1/16"	(2008)	115 1/2"	(2934)	112.41	(10.44)	116.92	(10.86)	63.41	(5.89)	156.84	(14.57)

• Dimensions in parentheses are in millimeters or square meters.

Grille Patterns

	Queen Anne	Diamond	Prairie A	Colonial	Modified Colonial	Modified Colonial with Simulated Check Rail	Tall Fractional	Tall Fractional with Simulated Check Rail	Short Fractional	Short Fractional with Simulated Check Rail
Gliding Patio Doors Traditional Panels	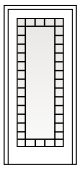	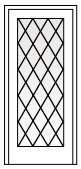	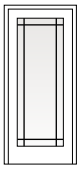	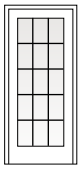	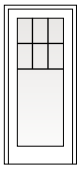	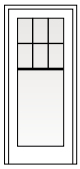	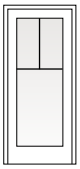	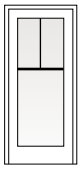	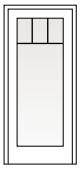	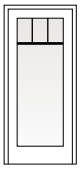
Gliding Patio Doors Contemporary Panels			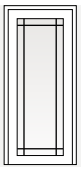	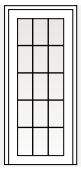	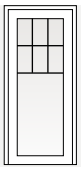	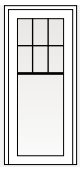	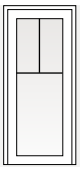	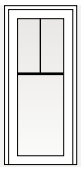	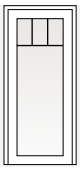	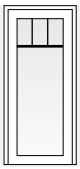

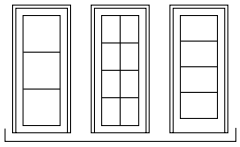
Specified Equal Light Examples

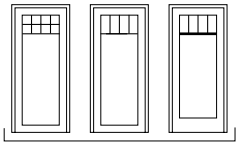
Specified Equal Light Fractional* Examples

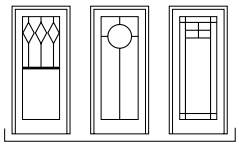
Custom Examples

*Bottom horizontal bar located at center or at custom dimensions.

Number of lights and overall pattern varies with patio door size. Patterns may not be available in all configuration or sizes. Specified equal light, specified equal light fractional and custom patterns are also available. For more grille options, see page 19 or visit **andersenwindows.com/grilles**.

Drop-Nose Channel

Optional drop-nose channel is available when higher product performance is required. Wood and concrete installations shown.

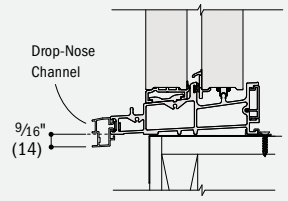

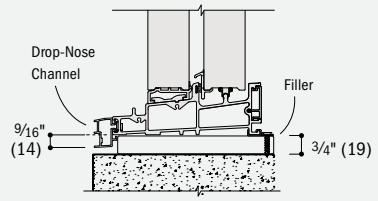

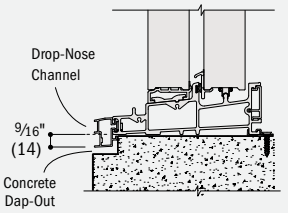

Remodeler Sill Bracket

Optional remodeler sill bracket is available for installation with an existing finished interior floor.

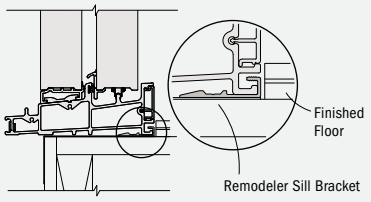

• Dimensions in parentheses are in millimeters.

Gliding Patio Door Details – Traditional Panels

Scale 1 1/2" (38) = 1'-0" (305) – 1:8

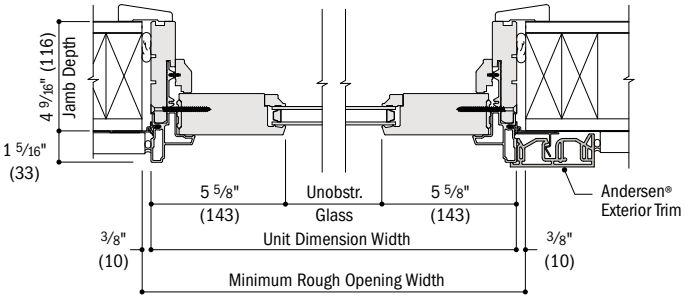

Horizontal Section

Stationary, Traditional Panel

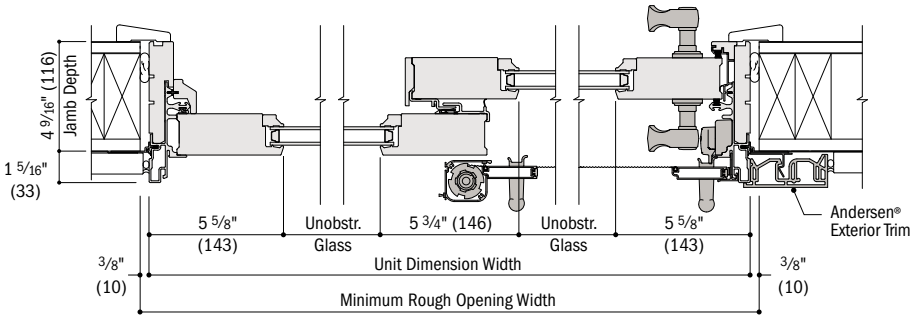

Horizontal Section

Two-Panel, Traditional Panels, Retractable Insect Screen

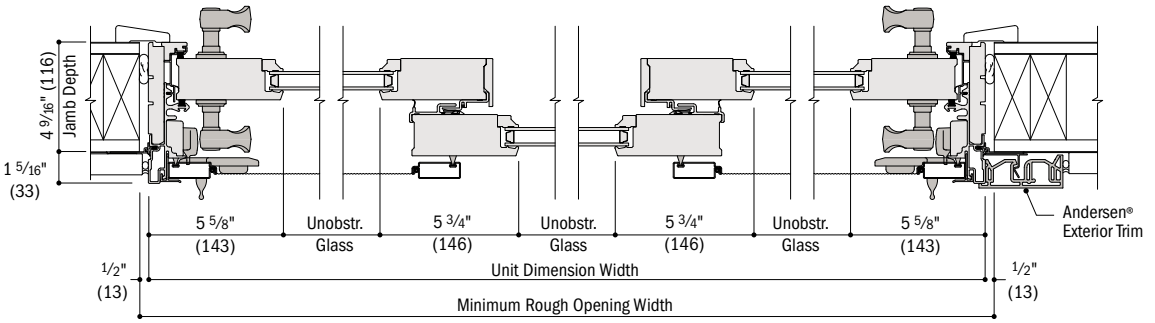

Horizontal Section

Three-Panel, Traditional Panels, Top-Hung Gliding or Gliding Insect Screen

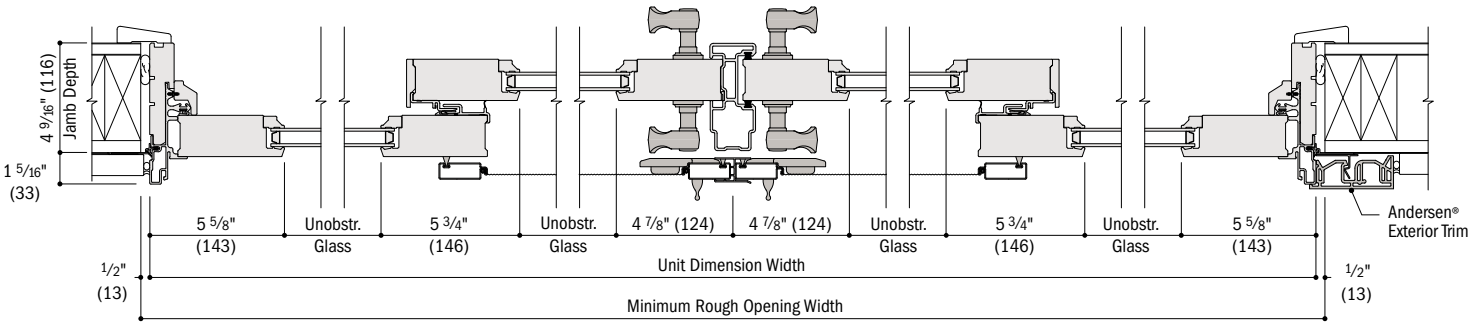

Horizontal Section

Four-Panel, Traditional Panels, Top-Hung Gliding or Gliding Insect Screen

continued on next page

- 4 9/16" (116) base jamb depth measurement is from back side of installation flange.
- Light-colored areas are parts included with door. Dark-colored areas are additional Andersen® parts required to complete door assembly as shown.
- **Minimum rough openings may need to be increased to allow for use of building wraps, flashing, sill panning, brackets, fasteners or other items. See installation information on pages 226-227.**
- Details are for illustration only and are not intended to represent product installation methods or materials. Refer to product installation instructions at andersenwindows.com.
- Dimensions in parentheses are in millimeters.
- Additional hardware options are available, including flush mount hardware.

Gliding Patio Door Details – Traditional Panels *(continued)*

Scale 1 1/2" (38) = 1'-0" (305) – 1:8

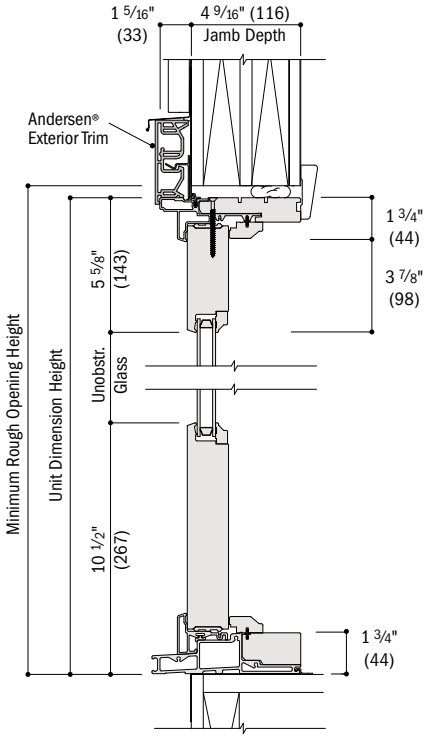

Vertical Section
Stationary, Traditional Panel

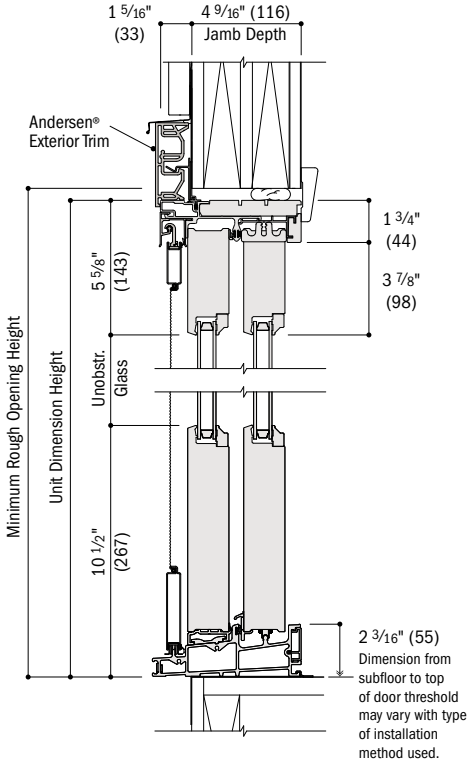

Vertical Section
Operating, Traditional Panels, Top-Hung Gliding Insect Screen

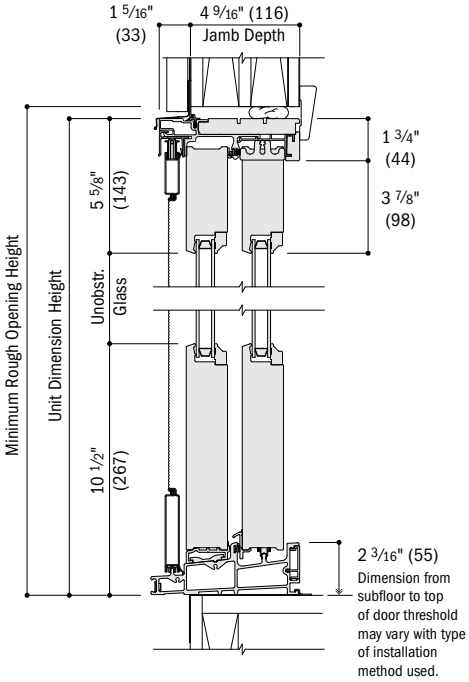

Vertical Section
Operating, Traditional Panels, Gliding Insect Screen

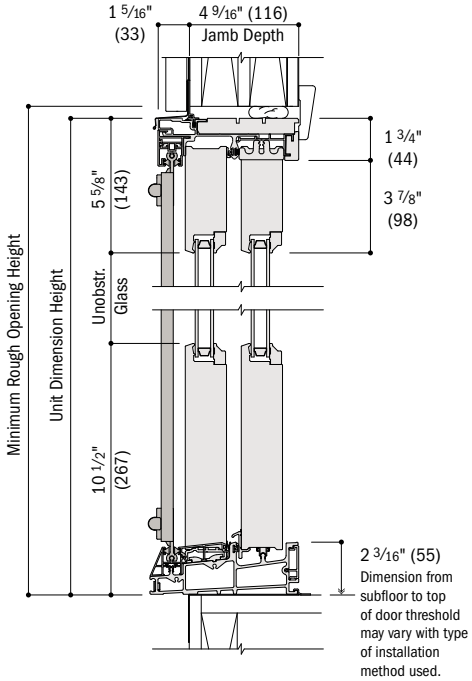

Vertical Section
Operating, Traditional Panels, Retractable Insect Screen

For optional drop-nose channel and remodeler sill bracket details, see page 129.
See pages 168-171 for joining details.

- 4 9/16" (116) base jamb depth measurement is from back side of installation flange.
- Light-colored areas are parts included with door. Dark-colored areas are additional Andersen® parts required to complete door assembly as shown.
- **Minimum rough openings may need to be increased to allow for use of building wraps, flashing, sill panning, brackets, fasteners or other items. See installation information on pages 226-227.**
- Details are for illustration only and are not intended to represent product installation methods or materials. Refer to product installation instructions at andersenwindows.com.
- Dimensions in parentheses are in millimeters.

Gliding Patio Door Details – Contemporary Panels

Scale 1 1/2" (38) = 1'-0" (305) – 1:8

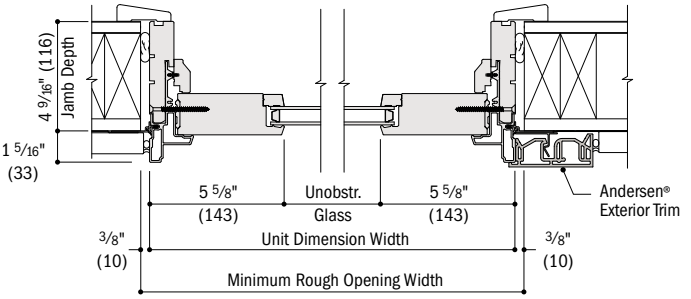

Horizontal Section

Stationary, Contemporary Panel

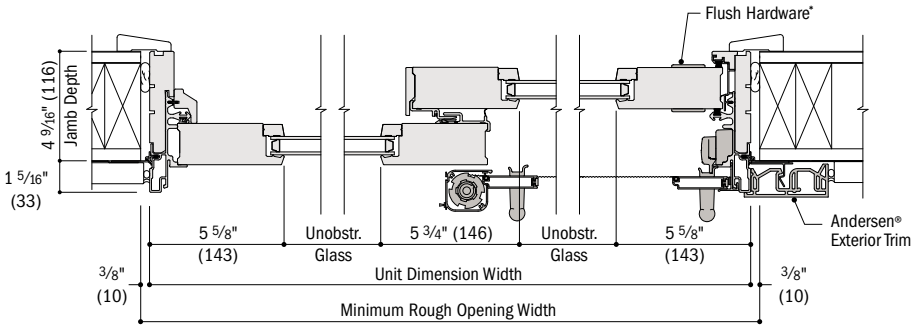

Horizontal Section

Two-Panel, Contemporary Panels, Retractable Insect Screen

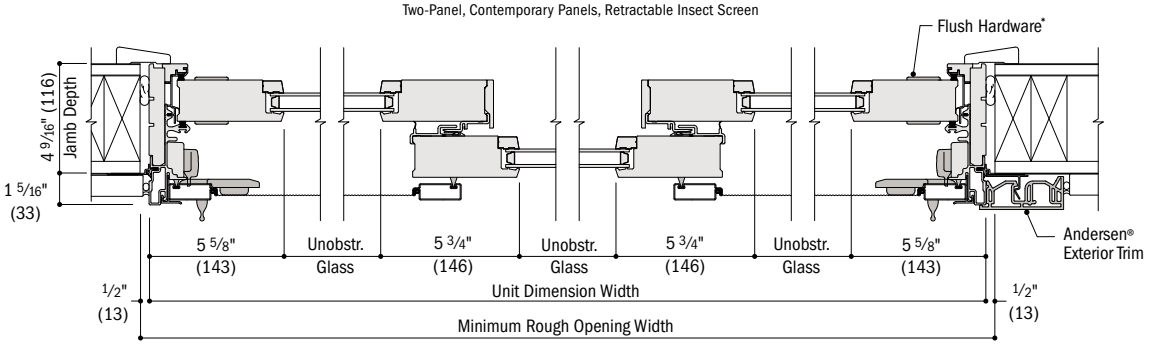

Horizontal Section

Three-Panel, Contemporary Panels, Top-Hung Gliding or Gliding Insect Screen

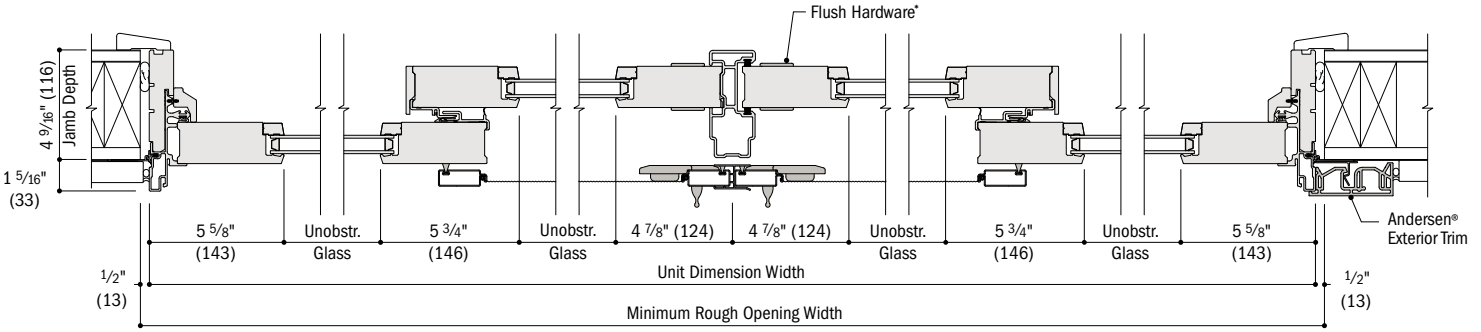

Horizontal Section

Four-Panel, Contemporary Panels, Top-Hung Gliding or Gliding Insect Screen

continued on next page

- 4 9/16" (116) base jamb depth measurement is from back side of installation flange.
- Light-colored areas are parts included with door. Dark-colored areas are additional Andersen® parts required to complete door assembly as shown.
- **Minimum rough openings may need to be increased to allow for use of building wraps, flashing, sill panning, brackets, fasteners or other items. See installation information on pages 226-227.**
- Details are for illustration only and are not intended to represent product installation methods or materials. Refer to product installation instructions at andersenwindows.com.
- Dimensions in parentheses are in millimeters.

*Flush hardware shown. Additional hardware options are available.

Gliding Patio Door Details – Contemporary Panels *(continued)*

Scale 1 1/2" (38) = 1'-0" (305) – 1:8

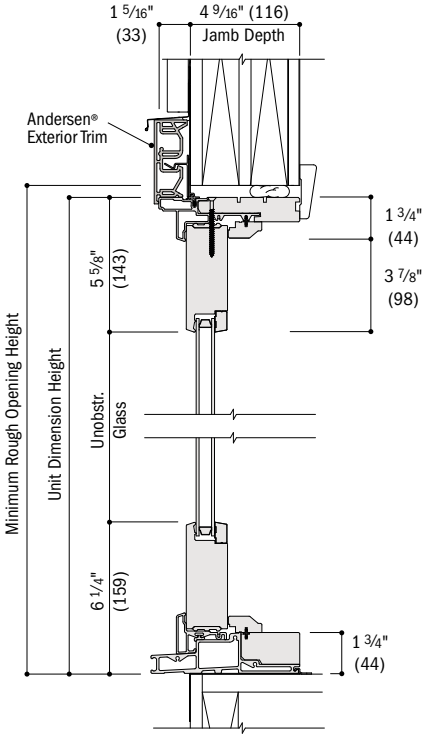

Vertical Section
Stationary, Contemporary Panel

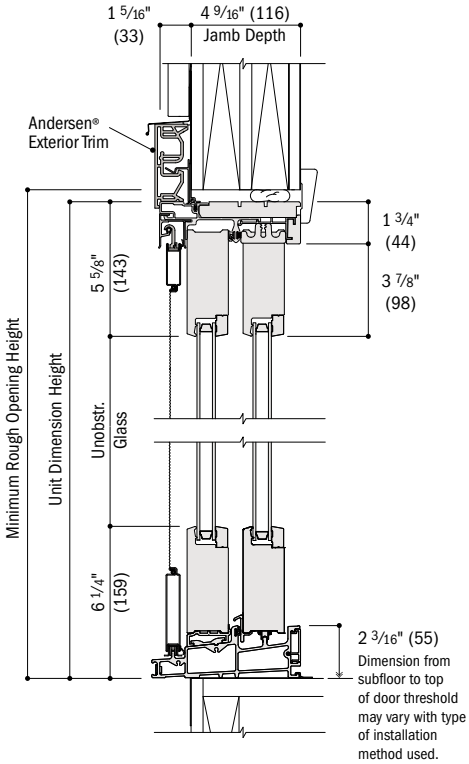

Vertical Section
Operating, Contemporary Panels, Top-Hung Gliding Insect Screen

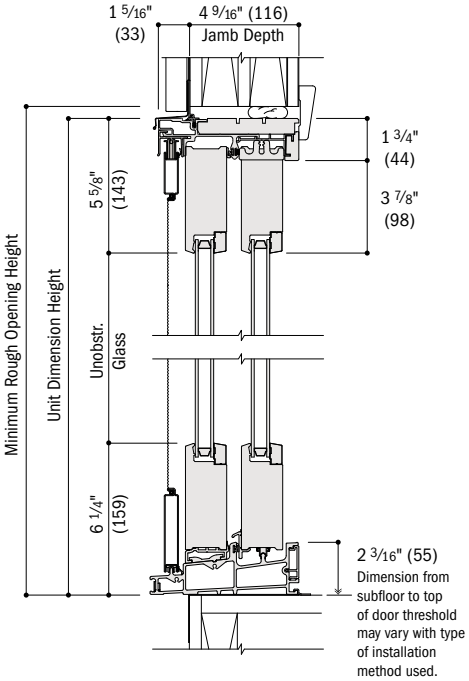

Vertical Section
Operating, Contemporary Panels, Gliding Insect Screen

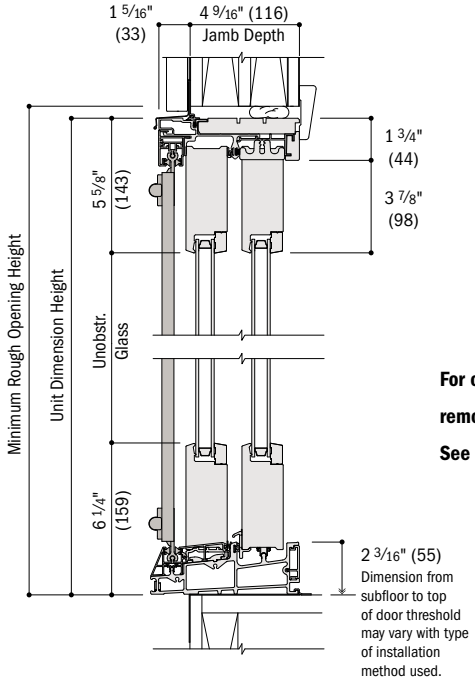

Vertical Section
Operating, Contemporary Panels, Retractable Insect Screen

For optional drop-nose channel and remodeler sill bracket details, see page 129.
See pages 168-171 for joining details.

- 4 9/16" (116) base jamb depth measurement is from back side of installation flange.
- Light-colored areas are parts included with door. Dark-colored areas are additional Andersen® parts required to complete door assembly as shown.
- **Minimum rough openings may need to be increased to allow for use of building wraps, flashing, sill panning, brackets, fasteners or other items. See installation information on pages 226-227.**
- Details are for illustration only and are not intended to represent product installation methods or materials. Refer to product installation instructions at andersenwindows.com.
- Dimensions in parentheses are in millimeters.

Table of Hinged Inswing Patio Door Sizes

Notes on the next page also apply to this page.

Scale 1/8" (3) = 1'-0" (305) – 1:96

Door Dimension	2'-0 1/8" (612)	3'-11 1/4" (1200)	3'-11 1/4" (1200)	2'-6 1/8" (764)	2'-6 1/8" (764)	2'-6 1/8" (764)	4'-11 1/4" (1505)	4'-11 1/4" (1505)	4'-11 1/4" (1505)
Minimum Rough Opening	2'-1" (634)	4'-0" (1219)	4'-0" (1219)	2'-7" (787)	2'-7" (787)	2'-7" (787)	5'-0" (1524)	5'-0" (1524)	5'-0" (1524)
Unobstructed Glass (single panel only)	12 7/8" (327)	12 7/8" (327)	12 7/8" (327)	18 7/8" (479)	18 7/8" (479)	18 7/8" (479)	18 7/8" (479)	18 7/8" (479)	18 7/8" (479)
4 heights	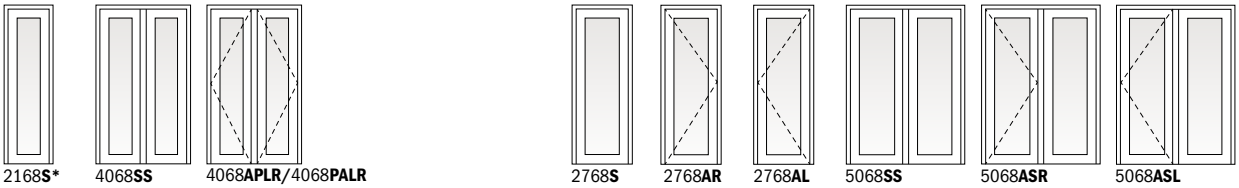								
1 FWHID/FWHICD	2168**S***	4068**SS**	4068**APLR**/4068**PALR**	2768**S**	2768**AR**	2768**AL**	5068**SS**	5068**ASR**	5068**ASL**
2 FWHID/FWHICD	21611**S***	40611**SS**	40611**APLR**/40611**PALR**	27611**S**	27611**AR**	27611**AL**	50611**SS**	50611**ASR**	50611**ASL**
3 FWHID/FWHICD	2180**S***	4080**SS**	4080**APLR**/4080**PALR**	2780**S**	2780**AR**	2780**AL**	5080**SS**	5080**ASR**	5080**SASL**
4 FWHID/FWHICD	21100**S***	40100**SS**	40100**APLR**/40100**PALR**	27100**S**	27100**AR**	27100**AL**	50100**SS**	50100**ASR**	50100**SASL**

Door Dimension	2'-8 1/8" (815)	2'-8 1/8" (815)	2'-8 1/8" (815)	5'-3 1/4" (1607)	5'-3 1/4" (1607)	5'-3 1/4" (1607)	5'-3 1/4" (1607)	5'-3 1/4" (1607)	5'-3 1/4" (1607)
Minimum Rough Opening	2'-9" (838)	2'-9" (838)	2'-9" (838)	5'-4" (1626)	5'-4" (1626)	5'-4" (1626)	5'-4" (1626)	5'-4" (1626)	5'-4" (1626)
Unobstructed Glass (single panel only)	20 7/8" (530)	20 7/8" (530)	20 7/8" (530)	20 7/8" (530)	20 7/8" (530)	20 7/8" (530)	20 7/8" (530)	20 7/8" (530)	20 7/8" (530)
4 heights	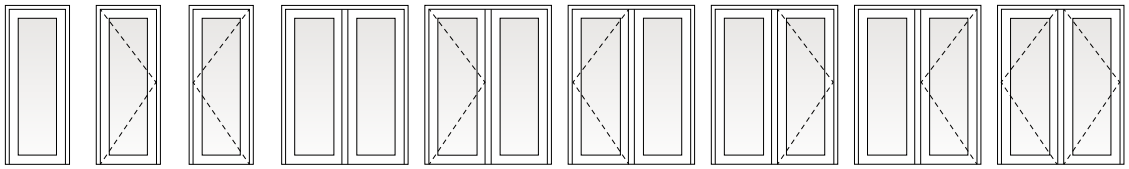								
1 FWHID/FWHICD	2968**S**	2968**AR**	2968**AL**	5468**SS**	5468**ASR**	5468**ASL**	5468**SAR**	5468**SAL**	5468**APLR**/5468**PALR**
2 FWHID/FWHICD	29611**S**	29611**AR**	29611**AL**	54611**SS**	54611**ASR**	54611**ASL**	54611**SAR**	54611**SAL**	54611**APLR**/54611**PALR**
3 FWHID/FWHICD	2980**S**	2980**AR**	2980**AL**	5480**SS**	5480**ASR**	5480**SASL**	5480**SAR**	5480**SAL**	5480**APLR**/5480**PALR**
4 FWHID/FWHICD	29100**S**	29100**AR**	29100**AL**	54100**SS**	54100**ASR**	54100**SASL**	54100**SAR**	54100**SAL**	54100**APLR**/54100**PALR**

Door Dimension	3'-0 1/8" (917)	3'-0 1/8" (917)	3'-0 1/8" (917)	5'-11 1/4" (1810)	5'-11 1/4" (1810)	5'-11 1/4" (1810)	5'-11 1/4" (1810)	5'-11 1/4" (1810)	5'-11 1/4" (1810)
Minimum Rough Opening	3'-1" (940)	3'-1" (940)	3'-1" (940)	6'-0" (1829)	6'-0" (1829)	6'-0" (1829)	6'-0" (1829)	6'-0" (1829)	6'-0" (1829)
Unobstructed Glass (single panel only)	24 7/8" (632)	24 7/8" (632)	24 7/8" (632)	24 7/8" (632)	24 7/8" (632)	24 7/8" (632)	24 7/8" (632)	24 7/8" (632)	24 7/8" (632)
4 heights	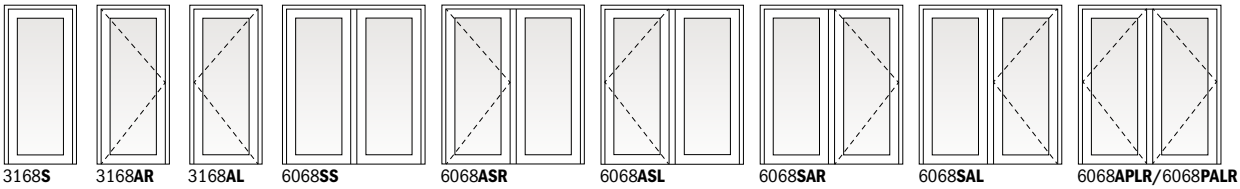								
1 FWHID/FWHICD	3168**S**	3168**AR**	3168**AL**	6068**SS**	6068**ASR**	6068**ASL**	6068**SAR**	6068**SAL**	6068**APLR**/6068**PALR**
2 FWHID/FWHICD	31611**S**	31611**AR**	31611**AL**	60611**SS**	60611**ASR**	60611**ASL**	60611**SAR**	60611**SAL**	60611**APLR**/60611**PALR**
3 FWHID/FWHICD	3180**S**	3180**AR**	3180**AL**	6080**SS**	6080**ASR**	6080**SASL**	6080**SAR**	6080**SAL**	6080**APLR**/6080**PALR**
4 FWHID/FWHICD	31100**S**	31100**AR**	31100**AL**	60100**SS**	60100**ASR**	60100**SASL**	60100**SAR**	60100**SAL**	60100**APLR**/60100**PALR**

Door Dimension	3'-2 1/8" (968)	3'-2 1/8" (968)	3'-2 1/8" (968)	6'-3 1/4" (1911)	6'-3 1/4" (1911)	6'-3 1/4" (1911)	6'-3 1/4" (1911)	6'-3 1/4" (1911)	6'-3 1/4" (1911)
Minimum Rough Opening	3'-3" (991)	3'-3" (991)	3'-3" (991)	6'-4" (1930)	6'-4" (1930)	6'-4" (1930)	6'-4" (1930)	6'-4" (1930)	6'-4" (1930)
Unobstructed Glass (single panel only)	26 7/8" (683)	26 7/8" (683)	26 7/8" (683)	26 7/8" (683)	26 7/8" (683)	26 7/8" (683)	26 7/8" (683)	26 7/8" (683)	26 7/8" (683)
4 heights	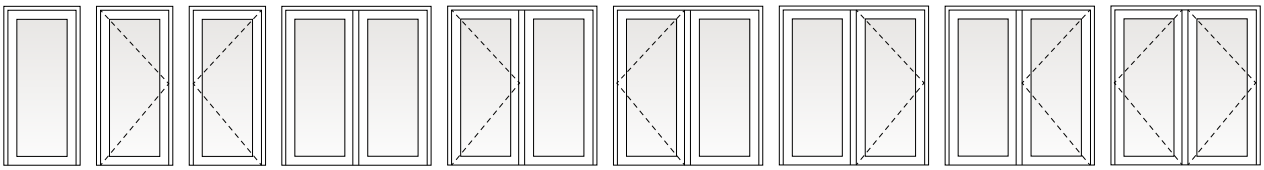								
1 FWHID/FWHICD	3368**S**	3368**AR**	3368**AL**	6468**SS**	6468**ASR**	6468**ASL**	6468**SAR**	6468**SAL**	6468**APLR**/6468**PALR**
2 FWHID/FWHICD	33611**S**	33611**AR**	33611**AL**	64611**SS**	64611**ASR**	64611**ASL**	64611**SAR**	64611**SAL**	64611**APLR**/64611**PALR**
3 FWHID/FWHICD	3380**S**	3380**AR**	3380**AL**	6480**SS**	6480**ASR**	6480**SASL**	6480**SAR**	6480**SAL**	6480**APLR**/6480**PALR**
4 FWHID/FWHICD	33100**S**	33100**AR**	33100**AL**	64100**SS**	64100**ASR**	64100**SASL**	64100**SAR**	64100**SAL**	64100**APLR**/64100**PALR**

continued on the next page

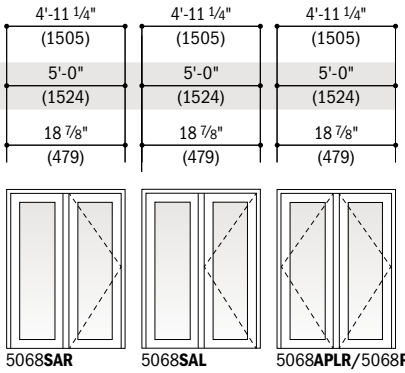

5068**SAR**	5068**SAL**	5068**APLR**/5068**PALR**
50611**SAR**	50611**SAL**	50611**APLR**/50611**PALR**
5080**SAR**	5080**SAL**	5080**APLR**/5080**PALR**
50100**SAR**	50100**SAL**	50100**APLR**/50100**PALR**

continued on the next page

- "Door Dimension" always refers to outside frame-to-frame dimension.
- "**Minimum Rough Opening**" **dimensions may need to be increased to allow for use of building wraps, flashing, sill panning, brackets, fasteners or other items. See pages 226-227 for more details.**
- Dimensions in parentheses are in millimeters.

*Single-panel active left- and right-hinged patio doors, shown on page 134, also available. Contact your Andersen supplier for more information.

Custom-size doors are available in 1/8" (3) increments. See pages 173 and 175 for custom sizes, specifications and information on shipping patio doors greater than 8' (2438).

Choose traditional (**FWHID**) or contemporary (**FWHICD**) panels. Contemporary panels shown. Stationary (**S**) patio doors can be used as an individual door or a sidelight. Inswing doors are available in both 4 9/16" (116) and 6 9/16" (167) base jamb depths.

Grille patterns shown on page 140. Details shown on pages 141-149.

Four Patio Door Heights

Traditional Panels

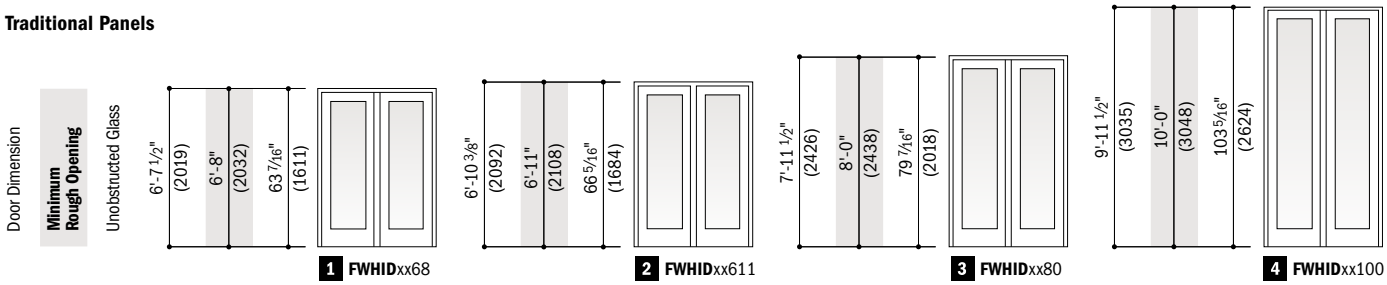

Contemporary Panels

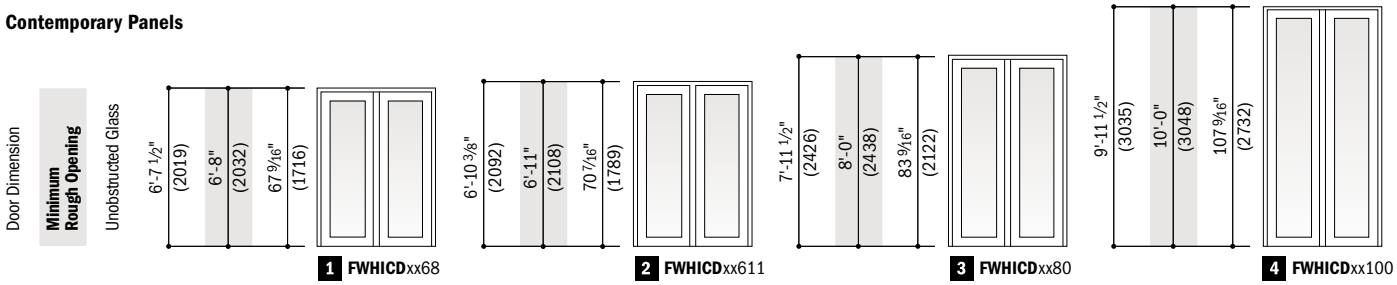

Order Designation Description

Viewed from the exterior. Traditional panels shown.

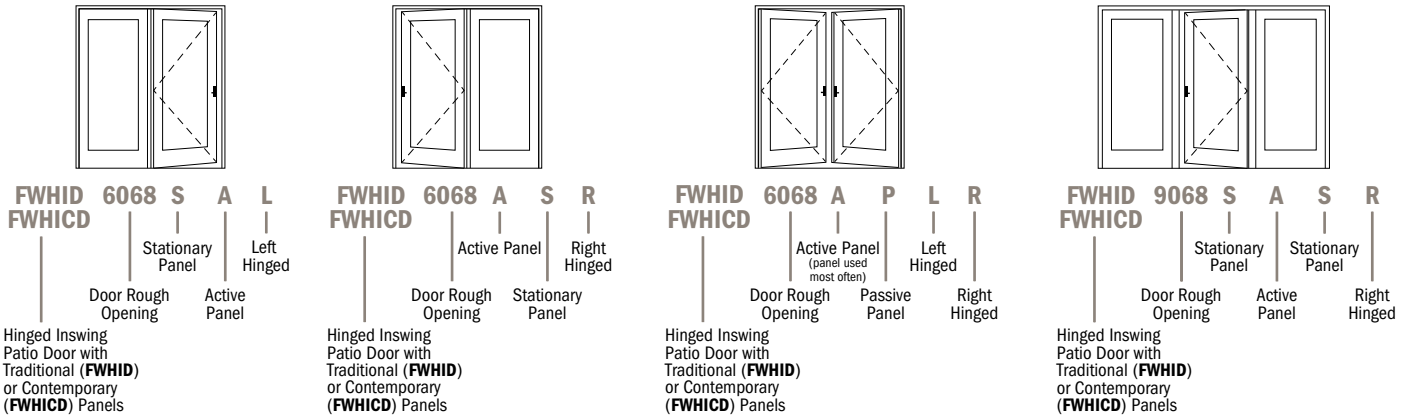

Table of Hinged Inswing Patio Door Sizes *(continued)*

Scale 1/8" (3) = 1'-0" (305) — 1:96

Door Dimension	7'-10 7/16" (2398)	7'-10 7/16" (2398)	7'-10 7/16" (2398)	7'-10 7/16" (2398)	7'-10 7/16" (2398)	7'-10 7/16" (2398)
Minimum Rough Opening	7'-11" (2413)	7'-11" (2413)	7'-11" (2413)	7'-11" (2413)	7'-11" (2413)	7'-11" (2413)
Unobstructed Glass (single panel only)	20 7/8" (530)	20 7/8" (530)	20 7/8" (530)	20 7/8" (530)	20 7/8" (530)	20 7/8" (530)

4 heights

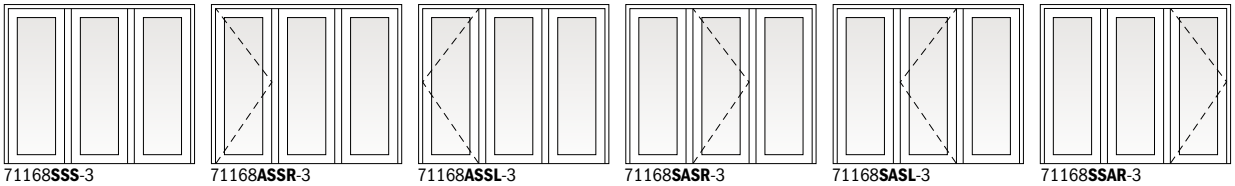

1 FWHID/FWHICD	71168**SSS**-3	71168**ASSR**-3	71168**ASSL**-3	71168**SASR**-3	71168**SASL**-3	71168**SSAR**-3
2 FWHID/FWHICD	711611**SSS**-3	711611**ASSR**-3	711611**ASSL**-3	711611**SASR**-3	711611**SASL**-3	711611**SSAR**-3
3 FWHID/FWHICD	71180**SSS**-3	71180**ASSR**-3	71180**SASSL**-3	71180**SASR**-3	71180**SASL**-3	71180**SSAR**-3
4 FWHID/FWHICD	711100**SSS**-3	711100**ASSR**-3	711100**SASSL**-3	711100**SASR**-3	711100**SASL**-3	711100**SSAR**-3

Door Dimension	8'-10 7/16" (2703)	8'-10 7/16" (2703)	8'-10 7/16" (2703)	8'-10 7/16" (2703)	8'-10 7/16" (2703)
Minimum Rough Opening	8'-11" (2717)	8'-11" (2717)	8'-11" (2717)	8'-11" (2717)	8'-11" (2717)
Unobstructed Glass (single panel only)	24 7/8" (632)	24 7/8" (632)	24 7/8" (632)	24 7/8" (632)	24 7/8" (632)

4 heights

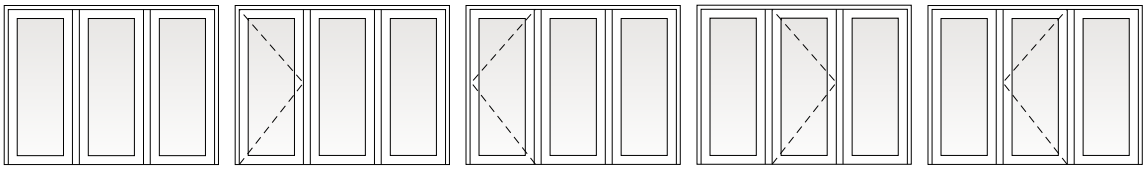

1 FWHID/FWHICD	81168**SSS**-3	81168**ASSR**-3	81168**ASSL**-3	81168**SASR**-3	81168**SASL**-3
2 FWHID/FWHICD	811611**SSS**-3	811611**ASSR**-3	811611**ASSL**-3	811611**SASR**-3	811611**SASL**-3
3 FWHID/FWHICD	81180**SSS**-3	81180**ASSR**-3	81180**SASSL**-3	81180**SASR**-3	81180**SASL**-3
4 FWHID/FWHICD	811100**SSS**-3	811100**ASSR**-3	811100**SASSL**-3	811100**SASR**-3	811100**SASL**-3

Door Dimension	9'-4 7/16" (2856)	9'-4 7/16" (2856)	9'-4 7/16" (2856)	9'-4 7/16" (2856)	9'-4 7/16" (2856)
Minimum Rough Opening	9'-5" (2870)	9'-5" (2870)	9'-5" (2870)	9'-5" (2870)	9'-5" (2870)
Unobstructed Glass (single panel only)	26 7/8" (683)	26 7/8" (683)	26 7/8" (683)	26 7/8" (683)	26 7/8" (683)

4 heights

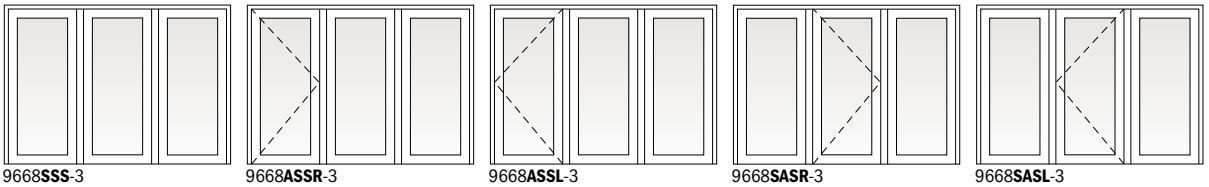

1 FWHID/FWHICD	9668**SSS**-3	9668**ASSR**-3	9668**ASSL**-3	9668**SASR**-3	9668**SASL**-3
2 FWHID/FWHICD	96611**SSS**-3	96611**ASSR**-3	96611**ASSL**-3	96611**SASR**-3	96611**SASL**-3
3 FWHID/FWHICD	9680**SSS**-3	9680**ASSR**-3	9680**ASSL**-3	9680**SASR**-3	9680**SASL**-3
4 FWHID/FWHICD	96100**SSS**-3	96100**ASSR**-3	96100**ASSL**-3	96100**SASR**-3	96100**SASL**-3

Custom-size doors are available in 1/8" (3) increments.

See pages 173 and 175 for custom sizes, specifications and information on shipping patio doors greater than 8' (2438).

Choose traditional (**FWHID**) or contemporary (**FWHICD**) panels. Contemporary panels shown. Stationary (**S**) patio doors can be used as an individual door or as a sidelight. Inswing doors are available in both 4 9/16" (116) and 6 9/16" (167) base jamb depths. Grille patterns shown on page 140. Details shown on pages 141-149.

- "Door Dimension" always refers to outside frame-to-frame dimension.
- "**Minimum Rough Opening**" **dimensions may need to be increased to allow for use of building wraps, flashing, sill panning, brackets, fasteners or other items. See pages 226-227 for more details.**
- Dimensions in parentheses are in millimeters.

Notes on the previous page also apply to this page.

7'-10 7/16" (2398)	7'-10 7/16" (2398)	7'-10 7/16" (2398)	7'-10 7/16" (2398)	7'-10 7/16" (2398)
7'-11" (2413)	7'-11" (2413)	7'-11" (2413)	7'-11" (2413)	7'-11" (2413)
20 7/8" (530)	20 7/8" (530)	20 7/8" (530)	20 7/8" (530)	20 7/8" (530)

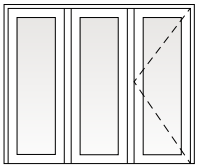
71168**SSAL**-3
711611**SSAL**-3
71180**SSAL**-3
711100**SSAL**-3

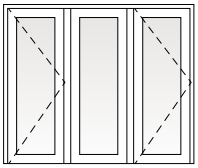
71168**ASARR**-3
711611**ASARR**-3
71180**ASARR**-3
711100**ASARR**-3

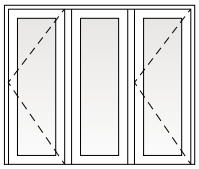
71168**ASALL**-3
711611**ASALL**-3
71180**ASALL**-3
711100**ASALL**-3

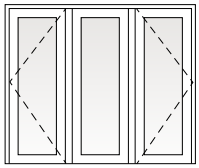
71168**ASALR**-3
711611**ASALR**-3
71180**ASALR**-3
711100**ASALR**-3

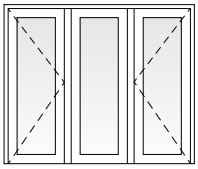
71168**ASARL**-3
711611**ASARL**-3
71180**ASARL**-3
711100**ASARL**-3

8'-10 7/16" (2703)	8'-10 7/16" (2703)	8'-10 7/16" (2703)	8'-10 7/16" (2703)	8'-10 7/16" (2703)	8'-10 7/16" (2703)
8'-11" (2717)	8'-11" (2717)	8'-11" (2717)	8'-11" (2717)	8'-11" (2717)	8'-11" (2717)
24 7/8" (632)	24 7/8" (632)	24 7/8" (632)	24 7/8" (632)	24 7/8" (632)	24 7/8" (632)

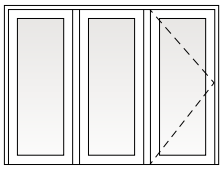
81168**SSAR**-3
811611**SSAR**-3
81180**SSAR**-3
811100**SSAR**-3

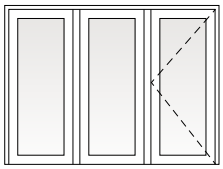
81168**SSAL**-3
811611**SSAL**-3
81180**SSAL**-3
811100**SSAL**-3

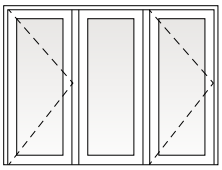
81168**ASARR**-3
811611**ASARR**-3
81180**ASARR**-3
811100**ASARR**-3

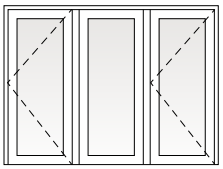
81168**ASALL**-3
811611**ASALL**-3
81180**ASALL**-3
811100**ASALL**-3

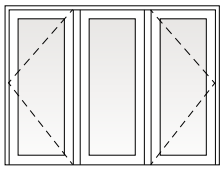
81168**ASALR**-3
811611**ASALR**-3
81180**ASALR**-3
811100**ASALR**-3

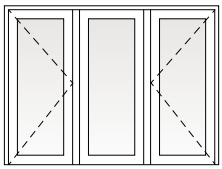
81168**ASARL**-3
811611**ASARL**-3
81180**ASARL**-3
811100**ASARL**-3

9'-4 7/16" (2856)	9'-4 7/16" (2856)	9'-4 7/16" (2856)	9'-4 7/16" (2856)	9'-4 7/16" (2856)	9'-4 7/16" (2856)
9'-5" (2870)	9'-5" (2870)	9'-5" (2870)	9'-5" (2870)	9'-5" (2870)	9'-5" (2870)
26 7/8" (683)	26 7/8" (683)	26 7/8" (683)	26 7/8" (683)	26 7/8" (683)	26 7/8" (683)

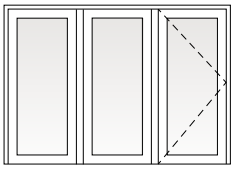
9668**SSAR**-3
96611**SSAR**-3
9680**SSAR**-3
96100**SSAR**-3

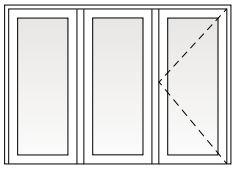
9668**SSAL**-3
96611**SSAL**-3
9680**SSAL**-3
96100**SSAL**-3

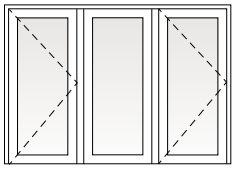
9668**ASARR**-3
96611**ASARR**-3
9680**ASARR**-3
96100**ASARR**-3

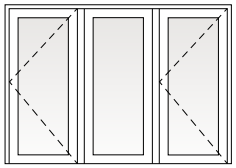
9668**ASALL**-3
96611**ASALL**-3
9680**ASALL**-3
96100**ASALL**-3

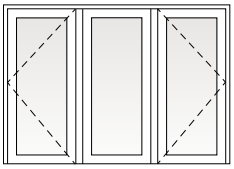
9668**ASALR**-3
96611**ASALR**-3
9680**ASALR**-3
96100**ASALR**-3

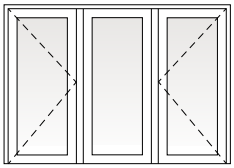
9668**ASARL**-3
96611**ASARL**-3
9680**ASARL**-3
96100**ASARL**-3

- "Door Dimension" always refers to outside frame-to-frame dimension.
- "**Minimum Rough Opening**" **dimensions may need to be increased to allow for use of building wraps, flashing, sill panning, brackets, fasteners or other items. See pages 226-227 for more details.**
- Dimensions in parentheses are in millimeters.

Hinged Inswing Patio Door Opening and Area Specifications

Door Number	Number of Panels in Open Position*	Clear Opening Area Sq. Ft./(m²)		Clear Opening Maximums 90° Width Inches/(mm)		Full Width Inches/(mm)		Height Inches/(mm)		Traditional Panel Glass Area Sq. Ft./(m²)		Contemporary Panel Glass Area Sq. Ft./(m²)		Vent Area Sq. Ft./(m²)		Overall Door Area Sq. Ft./(m²)	
FWHID/FWHICD2168**S****	1	10.43	(0.97)	18 5/16"	(465)	20"	(508)	75 1/2"	(1918)	5.66	(0.53)	6.04	(0.56)	10.43	(0.97)	13.30	(1.24)
FWHID/FWHICD2768	1	13.57	(1.26)	24 5/16"	(618)	26"	(660)	75 1/2"	(1918)	8.30	(0.77)	8.85	(0.82)	13.57	(1.26)	16.61	(1.54)
FWHID/FWHICD2968	1	14.62	(1.36)	26 5/16"	(668)	28"	(711)	75 1/2"	(1918)	9.18	(0.85)	9.79	(0.91)	14.62	(1.36)	17.72	(1.65)
FWHID/FWHICD3168	1	16.71	(1.55)	30 5/16"	(770)	32"	(813)	75 1/2"	(1918)	10.94	(1.02)	11.66	(1.08)	16.71	(1.55)	19.93	(1.85)
FWHID/FWHICD3368	1	17.75	(1.65)	32 5/16"	(821)	34"	(864)	75 1/2"	(1918)	11.82	(1.10)	12.60	(1.17)	17.75	(1.65)	21.03	(1.95)
FWHID/FWHICD4068	2	22.54	(2.09)	18 5/16"	(465)	43 1/8"	(1095)	75 1/2"	(1918)	11.34	(1.05)	12.08	(1.12)	22.54	(2.09)	26.09	(2.42)
FWHID/FWHICD4068	1	10.43	(0.97)	18 5/16"	(465)	20"	(508)	75 1/2"	(1918)	11.34	(1.05)	12.08	(1.12)	10.43	(0.97)	26.09	(2.42)
FWHID/FWHICD5068	1 AS/SA	13.57	(1.26)	24 5/16"	(618)	26"	(660)	75 1/2"	(1918)	16.63	(1.54)	17.71	(1.65)	13.57	(1.26)	32.71	(3.04)
FWHID/FWHICD5068	2 AP/PA	28.81	(2.68)	24 5/16"	(618)	55 1/8"	(1400)	75 1/2"	(1918)	16.63	(1.54)	17.71	(1.65)	28.81	(2.68)	32.71	(3.04)
FWHID/FWHICD5068	1 AP/PA	13.57	(1.26)	24 5/16"	(618)	26"	(660)	75 1/2"	(1918)	16.63	(1.54)	17.71	(1.65)	13.57	(1.26)	32.71	(3.04)
FWHID/FWHICD5468	1 AS/SA	14.62	(1.36)	26 5/16"	(668)	28"	(711)	75 1/2"	(1918)	18.39	(1.71)	19.59	(1.82)	14.62	(1.36)	34.92	(3.24)
FWHID/FWHICD5468	2 AP/PA	30.90	(2.87)	26 5/16"	(668)	59 1/8"	(1502)	75 1/2"	(1918)	18.39	(1.71)	19.59	(1.82)	30.90	(2.87)	34.92	(3.24)
FWHID/FWHICD5468	1 AP/PA	14.61	(1.36)	26 5/16"	(668)	28"	(711)	75 1/2"	(1918)	18.39	(1.71)	19.59	(1.82)	14.61	(1.36)	34.92	(3.24)
FWHID/FWHICD6068	1 AS/SA	16.71	(1.55)	30 5/16"	(770)	32"	(813)	75 1/2"	(1918)	21.92	(2.04)	23.34	(2.17)	16.71	(1.55)	39.34	(3.65)
FWHID/FWHICD6068	2 AP/PA	35.08	(3.26)	30 5/16"	(770)	67 1/8"	(1705)	75 1/2"	(1918)	21.92	(2.04)	23.34	(2.17)	35.08	(3.26)	39.34	(3.65)
FWHID/FWHICD6068	1 AP/PA	16.71	(1.55)	30 5/16"	(770)	32"	(813)	75 1/2"	(1918)	21.92	(2.04)	23.34	(2.17)	16.71	(1.55)	39.34	(3.65)
FWHID/FWHICD6468	1 AS/SA	17.75	(1.65)	32 5/16"	(821)	34"	(864)	75 1/2"	(1918)	23.68	(2.20)	25.22	(2.34)	17.75	(1.65)	41.54	(3.86)
FWHID/FWHICD6468	2 AP/PA	37.17	(3.45)	32 5/16"	(821)	71 1/8"	(1806)	75 1/2"	(1918)	23.68	(2.20)	25.22	(2.34)	37.17	(3.45)	41.54	(3.86)
FWHID/FWHICD6468	1 AP/PA	17.75	(1.65)	32 5/16"	(821)	34"	(864)	75 1/2"	(1918)	23.68	(2.20)	25.22	(2.34)	17.75	(1.65)	41.54	(3.86)
FWHID/FWHICD71168-3	1 ASS/SAS/SSA/ASA	14.62	(1.36)	26 5/16"	(668)	28"	(711)	75 1/2"	(1918)	27.59	(2.56)	29.40	(2.73)	14.62	(1.36)	52.12	(4.84)
FWHID/FWHICD71168-3	2 ASA	14.62	(1.36)	26 5/16"	(668)	28"	(711)	75 1/2"	(1918)	27.59	(2.56)	29.40	(2.73)	29.24	(2.72)	52.12	(4.84)
FWHID/FWHICD81168-3	1 ASS/SAS/SSA/ASA	16.71	(1.55)	30 5/16"	(770)	32"	(813)	75 1/2"	(1918)	32.87	(3.05)	35.03	(3.25)	16.71	(1.55)	58.74	(5.46)
FWHID/FWHICD81168-3	2 ASA	16.71	(1.55)	30 5/16"	(770)	32"	(813)	75 1/2"	(1918)	32.87	(3.05)	35.03	(3.25)	33.42	(3.10)	58.74	(5.46)
FWHID/FWHICD9668-3	1 ASS/SAS/SSA/ASA	17.75	(1.65)	32 5/16"	(821)	34"	(864)	75 1/2"	(1918)	35.52	(3.30)	37.84	(3.52)	17.75	(1.65)	62.06	(5.77)
FWHID/FWHICD9668-3	2 ASA	17.75	(1.65)	32 5/16"	(821)	34"	(864)	75 1/2"	(1918)	35.52	(3.30)	37.84	(3.52)	35.50	(3.30)	62.06	(5.77)
FWHID/FWHICD21611**S****	1	10.83	(1.01)	18 5/16"	(465)	20"	(508)	78 1/8"	(1984)	5.92	(0.55)	6.29	(0.58)	10.83	(1.01)	13.78	(1.28)
FWHID/FWHICD27611	1	14.09	(1.31)	24 5/16"	(618)	26"	(660)	78 1/8"	(1984)	8.68	(0.81)	9.23	(0.86)	14.09	(1.31)	17.22	(1.60)
FWHID/FWHICD29611	1	15.17	(1.41)	26 5/16"	(668)	28"	(711)	78 1/8"	(1984)	9.60	(0.89)	10.20	(0.95)	15.17	(1.41)	18.36	(1.71)
FWHID/FWHICD31611	1	17.34	(1.61)	30 5/16"	(770)	32"	(813)	78 1/8"	(1984)	11.44	(1.06)	12.16	(1.13)	17.34	(1.61)	20.65	(1.92)
FWHID/FWHICD33611	1	18.43	(1.71)	32 5/16"	(821)	34"	(864)	78 1/8"	(1984)	12.36	(1.15)	13.14	(1.22)	18.43	(1.71)	21.79	(2.02)
FWHID/FWHICD40611	2	23.40	(2.17)	18 5/16"	(465)	43 1/8"	(1095)	78 1/8"	(1984)	11.86	(1.10)	12.60	(1.17)	23.40	(2.17)	27.03	(2.51)
FWHID/FWHICD40611	1	10.83	(1.01)	18 5/16"	(465)	20"	(508)	78 1/8"	(1984)	11.86	(1.10)	12.60	(1.17)	10.83	(1.01)	27.03	(2.51)
FWHID/FWHICD50611	1 AS/SA	14.09	(1.31)	24 5/16"	(618)	26"	(660)	78 1/8"	(1984)	17.38	(1.61)	18.46	(1.71)	14.09	(1.31)	33.89	(3.15)
FWHID/FWHICD50611	2 AP/PA	29.91	(2.78)	24 5/16"	(618)	55 1/8"	(1400)	78 1/8"	(1984)	17.38	(1.61)	18.46	(1.71)	29.91	(2.78)	33.89	(3.15)
FWHID/FWHICD50611	1 AP/PA	14.09	(1.31)	24 5/16"	(618)	26"	(660)	78 1/8"	(1984)	17.38	(1.61)	18.46	(1.71)	14.09	(1.31)	33.89	(3.15)
FWHID/FWHICD54611	1 AS/SA	15.17	(1.41)	26 5/16"	(668)	28"	(711)	78 1/8"	(1984)	19.23	(1.79)	20.42	(1.90)	15.17	(1.41)	36.18	(3.36)
FWHID/FWHICD54611	2 AP/PA	32.08	(2.98)	26 5/16"	(668)	59 1/8"	(1502)	78 1/8"	(1984)	19.23	(1.79)	20.42	(1.90)	32.08	(2.98)	36.18	(3.36)
FWHID/FWHICD54611	1 AP/PA	15.17	(1.41)	26 5/16"	(668)	28"	(711)	78 1/8"	(1984)	19.23	(1.79)	20.42	(1.90)	15.17	(1.41)	36.18	(3.36)
FWHID/FWHICD60611	1 AS/SA	17.34	(1.61)	30 5/16"	(770)	32"	(813)	78 1/8"	(1984)	22.91	(2.13)	24.33	(2.26)	17.34	(1.61)	40.76	(3.79)
FWHID/FWHICD60611	2 AP/PA	36.42	(3.38)	30 5/16"	(770)	67 1/8"	(1705)	78 1/8"	(1984)	22.91	(2.13)	24.33	(2.26)	36.42	(3.38)	40.76	(3.79)
FWHID/FWHICD60611	1 AP/PA	17.34	(1.61)	30 5/16"	(770)	32"	(813)	78 1/8"	(1984)	22.91	(2.13)	24.33	(2.26)	17.34	(1.61)	40.76	(3.79)
FWHID/FWHICD64611	1 AS/SA	18.43	(1.71)	32 5/16"	(821)	34"	(864)	78 1/8"	(1984)	24.75	(2.30)	26.29	(2.44)	18.43	(1.71)	43.05	(4.00)
FWHID/FWHICD64611	2 AP/PA	38.59	(3.59)	32 5/16"	(821)	71 1/8"	(1806)	78 1/8"	(1984)	24.75	(2.30)	26.29	(2.44)	38.59	(3.59)	43.05	(4.00)
FWHID/FWHICD64611	1 AP/PA	18.43	(1.71)	32 5/16"	(821)	34"	(864)	78 1/8"	(1984)	24.75	(2.30)	26.29	(2.44)	18.43	(1.71)	43.05	(4.00)
FWHID/FWHICD711611-3	1 ASS/SAS/SSA/ASA	15.17	(1.41)	26 5/16"	(668)	28"	(711)	78 1/8"	(1984)	28.84	(2.68)	30.65	(2.85)	15.17	(1.41)	54.00	(5.02)
FWHID/FWHICD711611-3	2 ASA	15.17	(1.41)	26 5/16"	(668)	28"	(711)	78 1/8"	(1984)	28.84	(2.68)	30.65	(2.85)	30.34	(2.82)	54.00	(5.02)
FWHID/FWHICD811611-3	1 ASS/SAS/SSA/ASA	17.34	(1.61)	30 5/16"	(770)	32"	(813)	78 1/8"	(1984)	34.36	(3.19)	36.52	(3.39)	17.34	(1.61)	60.87	(5.65)
FWHID/FWHICD811611-3	2 ASA	17.34	(1.61)	30 5/16"	(770)	32"	(813)	78 1/8"	(1984)	34.36	(3.19)	36.52	(3.39)	34.68	(3.22)	60.87	(5.65)
FWHID/FWHICD96611-3	1 ASS/SAS/SSA/ASA	18.43	(1.71)	32 5/16"	(821)	34"	(864)	78 1/8"	(1984)	37.13	(3.45)	39.45	(3.67)	18.43	(1.71)	64.30	(5.97)
FWHID/FWHICD96611-3	2 ASA	18.43	(1.71)	32 5/16"	(821)	34"	(864)	78 1/8"	(1984)	37.13	(3.45)	39.45	(3.67)	36.86	(3.42)	64.30	(5.97)
FWHID/FWHICD2180**S****	1	12.65	(1.18)	18 5/16"	(465)	20"	(508)	91 1/2"	(2324)	7.09	(0.66)	7.47	(0.69)	12.65	(1.18)	15.98	(1.48)
FWHID/FWHICD2780	1	16.46	(1.53)	24 5/16"	(618)	26"	(660)	91 1/2"	(2324)	10.40	(0.97)	10.95	(1.02)	16.46	(1.53)	19.96	(1.85)
FWHID/FWHICD2980	1	17.72	(1.65)	26 5/16"	(668)	28"	(711)	91 1/2"	(2324)	11.50	(1.07)	12.11	(1.13)	17.72	(1.65)	21.28	(1.98)
FWHID/FWHICD3180	1	20.26	(1.88)	30 5/16"	(770)	32"	(813)	91 1/2"	(2324)	13.71	(1.27)	14.43	(1.34)	20.26	(1.88)	23.94	(2.22)
FWHID/FWHICD3380	1	21.53	(2.00)	32 5/16"	(821)	34"	(864)	91 1/2"	(2324)	14.81	(1.38)	15.59	(1.45)	21.53	(2.00)	25.26	(2.35)
FWHID/FWHICD4080	2	27.33	(2.54)	18 5/16"	(465)	43 1/8"	(1095)	91 1/2"	(2324)	14.20	(1.32)	14.94	(1.39)	27.33	(2.54)	31.34	(2.91)
FWHID/FWHICD4080	1	12.65	(1.18)	18 5/16"	(465)	20"	(508)	91 1/2"	(2324)	14.20	(1.32)	14.94	(1.39)	12.65	(1.18)	31.34	(2.91)
FWHID/FWHICD5080	1 AS/SA	16.46	(1.53)	24 5/16"	(618)	26"	(660)	91 1/2"	(1984)	20.82	(1.93)	21.91	(2.04)	16.46	(1.53)	39.29	(3.65)

* Dimensions in parentheses are in millimeters or square meters.
*For two-panel AP/PA doors with only one panel open, clear opening is based on the active panel open and the passive panel closed.
**Active left- and right-hinged patio doors also available. Contact your Andersen supplier for more information.

continued on next page

Hinged Inswing Patio Door Opening and Area Specifications *(continued)*

Door Number	Number of Panels in Open Position*	Clear Opening Area Sq. Ft./(m²)	Clear Opening Maximums 90˚ Width Inches/(mm)	Clear Opening Maximums Full Width Inches/(mm)	Clear Opening Maximums Height Inches/(mm)	Traditional Panel Glass Area Sq. Ft./(m²)	Contemporary Panel Glass Area Sq. Ft./(m²)	Vent Area Sq. Ft./(m²)	Overall Door Area Sq. Ft./(m²)
FWHID/FWHICD5080	2 AP/PA	34.93 (3.25)	24 5/16" (618)	55 1/8" (1400)	91 1/2" (2324)	20.82 (1.93)	21.91 (2.04)	34.93 (3.24)	39.29 (3.65)
FWHID/FWHICD5080	1 AP/PA	16.45 (1.53)	24 5/16" (618)	26" (660)	91 1/2" (2324)	20.82 (1.93)	21.91 (2.04)	16.45 (1.53)	39.29 (3.65)
FWHID/FWHICD5480	1 AS/SA	17.72 (1.65)	26 5/16" (668)	28" (711)	91 1/2" (2324)	23.03 (2.14)	24.23 (2.25)	17.72 (1.65)	41.95 (3.90)
FWHID/FWHICD5480	2 AP/PA	37.47 (3.48)	26 5/16" (668)	59 1/8" (1502)	91 1/2" (2324)	23.03 (2.14)	24.23 (2.25)	37.47 (3.48)	41.95 (3.90)
FWHID/FWHICD5480	1 AP/PA	17.72 (1.65)	26 5/16" (668)	28" (711)	91 1/2" (2324)	23.03 (2.14)	24.23 (2.25)	17.72 (1.65)	41.95 (3.90)
FWHID/FWHICD6080	1 AS/SA	20.26 (1.88)	30 5/16" (770)	32" (813)	91 1/2" (2324)	27.44 (2.55)	28.88 (2.68)	20.26 (1.88)	47.25 (4.39)
FWHID/FWHICD6080	2 AP/PA	42.54 (3.95)	30 5/16" (770)	67 1/8" (1705)	91 1/2" (2324)	27.44 (2.55)	28.88 (2.68)	42.54 (3.95)	47.25 (4.39)
FWHID/FWHICD6080	1 AP/PA	20.26 (1.88)	30 5/16" (770)	32" (813)	91 1/2" (2324)	27.44 (2.55)	28.88 (2.68)	20.26 (1.88)	47.25 (4.39)
FWHID/FWHICD6480	1 AS/SA	21.53 (2.00)	32 5/16" (821)	34" (864)	91 1/2" (2324)	29.65 (275)	31.30 (2.90)	21.53 (2.00)	49.91 (4.64)
FWHID/FWHICD6480	2 AP/PA	45.07 (4.19)	32 5/16" (821)	71 1/8" (1806)	91 1/2" (2324)	29.65 (275)	31.30 (2.90)	45.07 (4.19)	49.91 (4.64)
FWHID/FWHICD6480	1 AP/PA	21.52 (2.00)	32 5/16" (821)	34" (864)	91 1/2" (2324)	29.65 (275)	31.30 (2.90)	21.52 (2.00)	49.91 (4.64)
FWHID/FWHICD71180-3	1 ASS/SAS/SSA/ASA	17.72 (1.65)	26 5/16" (668)	28" (711)	91 1/2" (2324)	34.55 (3.21)	36.35 (3.38)	17.72 (1.65)	62.61 (5.82)
FWHID/FWHICD71180-3	2 ASA	17.72 (1.65)	26 5/16" (668)	28" (711)	91 1/2" (2324)	34.55 (3.21)	36.35 (3.38)	35.44 (3.30)	62.61 (5.82)
FWHID/FWHICD81180-3	1 ASS/SAS/SSA/ASA	20.26 (1.88)	30 5/16" (770)	32" (813)	91 1/2" (2324)	41.17 (3.82)	43.32 (4.02)	20.26 (1.88)	70.57 (6.56)
FWHID/FWHICD81180-3	2 ASA	20.26 (1.88)	30 5/16" (770)	32" (813)	91 1/2" (2324)	41.17 (3.82)	43.32 (4.02)	40.52 (3.76)	70.57 (6.56)
FWHID/FWHICD9680-3	1 ASS/SAS/SSA/ASA	21.53 (2.00)	32 5/16" (821)	34" (864)	91 1/2" (2324)	44.48 (4.13)	46.80 (4.35)	21.53 (2.00)	74.55 (6.93)
FWHID/FWHICD9680-3	2 ASA	21.53 (2.00)	32 5/16" (821)	34" (864)	91 1/2" (2324)	44.48 (4.13)	46.80 (4.35)	43.06 (4.00)	74.55 (6.93)
FWHID/FWHICD21100**S****	1	16.04 (1.49)	18 5/16" (465)	20" (508)	115 1/2" (2934)	9.24 (0.86)	9.61 (0.89)	16.04 (1.49)	20.00 (1.86)
FWHID/FWHICD27100	1	20.85 (1.94)	24 5/16" (618)	26" (660)	115 1/2" (2934)	13.56 (1.26)	14.10 (1.31)	20.85 (1.94)	24.97 (2.32)
FWHID/FWHICD29100	1	22.46 (2.09)	26 5/16" (668)	28" (711)	115 1/2" (2934)	15.00 (1.39)	15.60 (1.45)	22.46 (2.09)	26.63 (2.47)
FWHID/FWHICD31100	1	25.67 (2.39)	30 5/16" (770)	32" (813)	115 1/2" (2934)	17.87 (1.66)	18.59 (1.73)	25.67 (2.39)	29.95 (2.78)
FWHID/FWHICD33100	1	27.27 (2.53)	32 5/16" (821)	34" (864)	115 1/2" (2934)	19.31 (1.72)	20.08 (1.87)	27.27 (2.53)	31.61 (2.94)
FWHID/FWHICD40100	2	34.59 (3.21)	18 5/16" (465)	43 1/8" (1095)	115 1/2" (2934)	18.50 (1.72)	19.23 (1.79)	34.59 (3.21)	39.21 (3.64)
FWHID/FWHICD40100	1	16.04 (1.49)	18 5/16" (465)	20" (508)	115 1/2" (2934)	18.50 (1.72)	19.23 (1.79)	16.04 (1.49)	39.21 (3.64)
FWHID/FWHICD50100	1 AS/SA	20.85 (1.94)	24 5/16" (618)	26" (660)	115 1/2" (2934)	27.11 (2.52)	28.20 (2.62)	20.85 (1.94)	49.17 (4.57)
FWHID/FWHICD50100	2 AP/PA	44.21 (4.11)	24 5/16" (618)	55 1/8" (1400)	115 1/2" (2934)	27.11 (2.52)	28.20 (2.62)	44.21 (4.11)	49.17 (4.57)
FWHID/FWHICD50100	1 AP/PA	20.85 (1.94)	24 5/16" (618)	26" (660)	115 1/2" (2934)	27.11 (2.52)	28.20 (2.62)	20.85 (1.94)	49.17 (4.57)
FWHID/FWHICD54100	1 AS/SA	22.46 (2.09)	26 5/16" (668)	28" (711)	115 1/2" (2934)	29.99 (2.79)	31.19 (2.90)	22.46 (2.09)	52.49 (4.88)
FWHID/FWHICD54100	2 AP/PA	47.42 (4.41)	26 5/16" (668)	59 1/8" (1502)	115 1/2" (2934)	29.99 (2.79)	31.19 (2.90)	47.42 (4.41)	52.49 (4.88)
FWHID/FWHICD54100	1 AP/PA	22.46 (2.09)	26 5/16" (668)	28" (711)	115 1/2" (2934)	29.99 (2.79)	31.19 (2.90)	22.46 (2.09)	52.49 (4.88)
FWHID/FWHICD60100	1 AS/SA	25.67 (2.39)	30 5/16" (770)	32" (813)	115 1/2" (2934)	35.73 (3.32)	37.17 (3.45)	25.67 (2.39)	59.13 (5.49)
FWHID/FWHICD60100	2 AP/PA	53.84 (5.00)	30 5/16" (770)	67 1/8" (1705)	115 1/2" (2934)	35.73 (3.32)	37.17 (3.45)	53.84 (5.00)	59.13 (5.49)
FWHID/FWHICD60100	1 AP/PA	25.67 (2.39)	30 5/16" (770)	32" (813)	115 1/2" (2934)	35.73 (3.32)	37.17 (3.45)	25.67 (2.39)	59.13 (5.49)
FWHID/FWHICD64100	1 AS/SA	27.27 (2.53)	32 5/16" (821)	34" (864)	115 1/2" (2934)	38.61 (3.59)	40.16 (3.73)	27.27 (2.53)	62.45 (5.80)
FWHID/FWHICD64100	2 AP/PA	57.05 (5.30)	32 5/16" (821)	71 1/8" (1806)	115 1/2" (2934)	38.61 (3.59)	40.16 (3.73)	57.05 (5.30)	62.45 (5.80)
FWHID/FWHICD64100	1 AP/PA	27.27 (2.53)	32 5/16" (821)	34" (864)	115 1/2" (2934)	38.61 (3.59)	40.16 (3.73)	27.27 (2.53)	62.45 (5.80)
FWHID/FWHICD711100-3	1 ASS/SAS/SSA/ASA	22.46 (2.09)	26 5/16" (668)	28" (711)	115 1/2" (2934)	44.98 (4.18)	46.79 (4.35)	22.46 (2.09)	78.34 (7.28)
FWHID/FWHICD711100-3	2 ASA	22.46 (2.09)	26 5/16" (668)	28" (711)	115 1/2" (2934)	44.98 (4.18)	46.79 (4.35)	44.92 (4.17)	78.34 (7.28)
FWHID/FWHICD811100-3	1 ASS/SAS/SSA/ASA	25.67 (2.39)	30 5/16" (770)	32" (813)	115 1/2" (2934)	53.60 (4.98)	55.76 (5.18)	25.67 (2.39)	88.30 (8.20)
FWHID/FWHICD811100-3	2 ASA	25.67 (2.39)	30 5/16" (770)	32" (813)	115 1/2" (2934)	53.60 (4.98)	55.76 (5.18)	51.33 (4.77)	88.30 (8.20)
FWHID/FWHICD96100-3	1 ASS/SAS/SSA/ASA	27.27 (2.53)	32 5/16" (821)	34" (864)	115 1/2" (2934)	57.91 (5.38)	60.24 (5.60)	27.27 (2.53)	93.28 (8.67)
FWHID/FWHICD96100-3	2 ASA	27.27 (2.53)	32 5/16" (821)	34" (864)	115 1/2" (2934)	57.91 (5.38)	60.24 (5.60)	54.54 (5.07)	93.28 (8.67)

• Dimensions in parentheses are in millimeters or square meters.
*For two-panel AP/PA doors with only one panel open, clear opening is based on the active panel open and the passive panel closed.
**Active left- and right-hinged patio doors also available. Contact your Andersen supplier for more information.

Grille Patterns

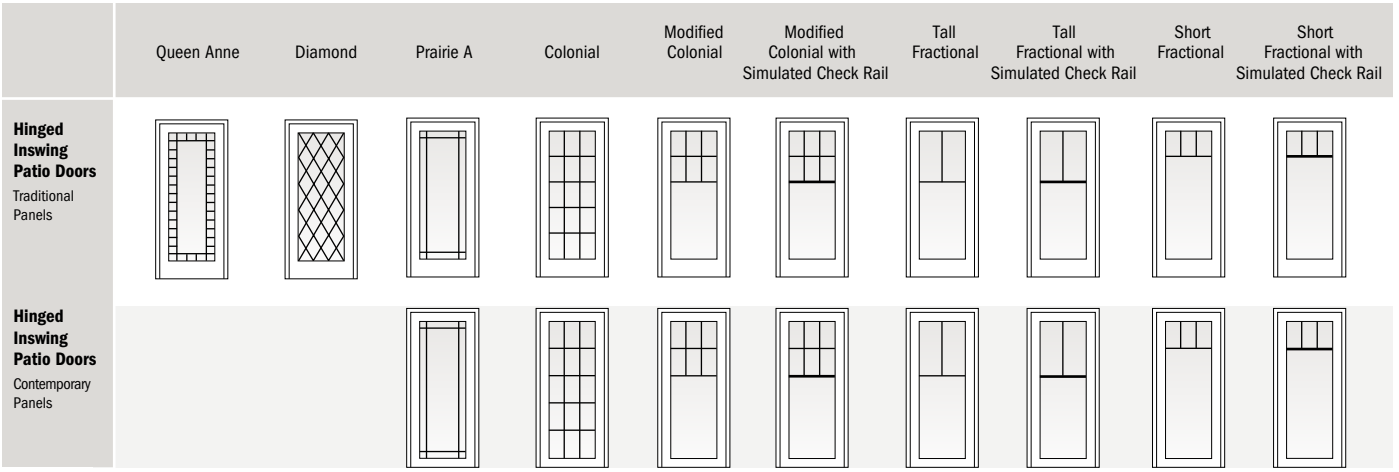

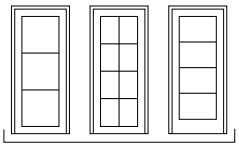

Specified Equal Light Examples

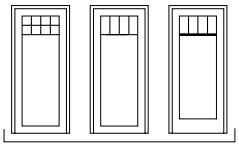

Specified Equal Light Fractional* Examples

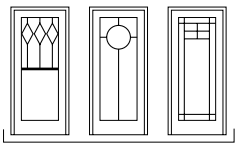

Custom Examples

*Bottom horizontal bar located at center or at custom dimensions.

Number of lights and overall pattern varies with patio door size. Patterns may not be available in all configuration or sizes. Specified equal light, specified equal light fractional and custom patterns are also available. For more grille options, see page 19 or visit **andersenwindows.com/grilles**.

Drop-Nose Channel

Optional drop-nose channel is available when higher product performance is required. Wood and concrete installations shown.

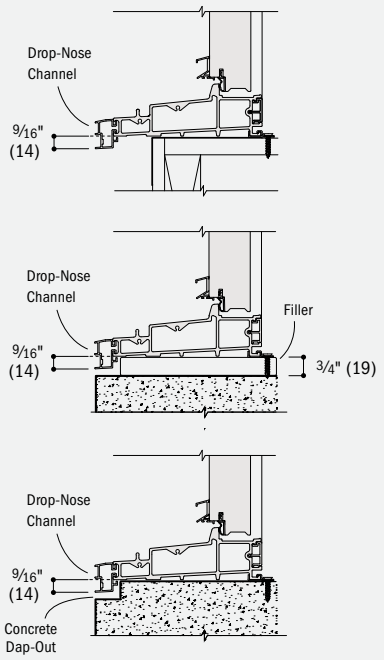

Remodeler Sill Bracket

Optional remodeler sill bracket is available for installation with an existing finished interior floor.

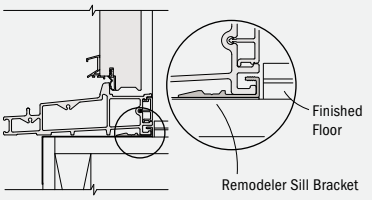

Hinged Inswing Patio Door Details – 6 9/16" (167) Base Jamb Depth with Traditional Panels

Scale 1 1/2" (38) = 1'-0" (305) – 1:8

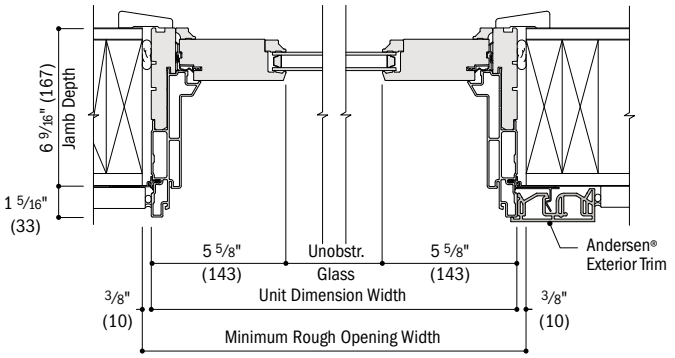

Horizontal Section

Stationary (**S**), Traditional Panel

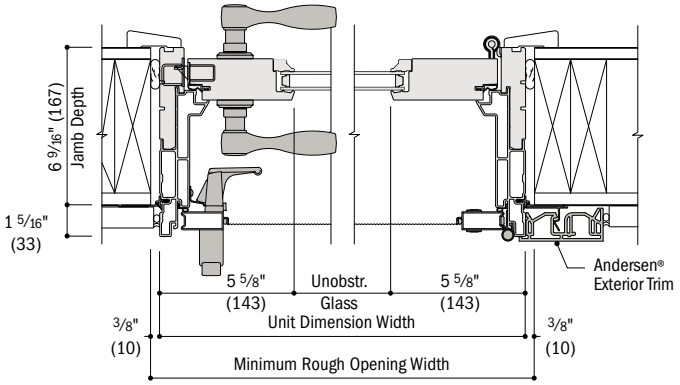

Horizontal Section

Active (**AR**/AL), Traditional Panel, Hinged Insect Screen

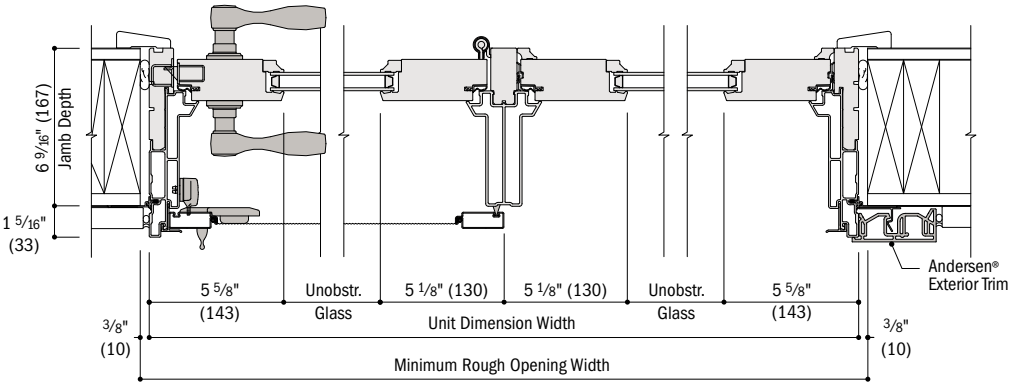

Horizontal Section

Two-Panel Active-Stationary (**ASR**/ASL/SAL/SAR), Traditional Panels, Top-Hung Gliding or Gliding Insect Screen

continued on next page

- 6 9/16" (167) base jamb depth measurement is from back side of installation flange.
- Light-colored areas are parts included with door. Dark-colored areas are additional Andersen® parts required to complete door assembly as shown.
- Dimensions in parentheses are in millimeters.
- **Rough openings may need to be increased to allow for use of building wraps, flashing, sill panning, brackets, fasteners or other items. See installation information on pages 226-227.**
- Details are for illustration only and are not intended to represent product installation methods or materials. Refer to product installation instructions at andersenwindows.com.

Hinged Inswing Patio Door Details – 6 9/16" (167) Base Jamb Depth with Traditional Panels *(continued)*

Scale 1 1/2" (38) = 1'-0" (305) – 1:8

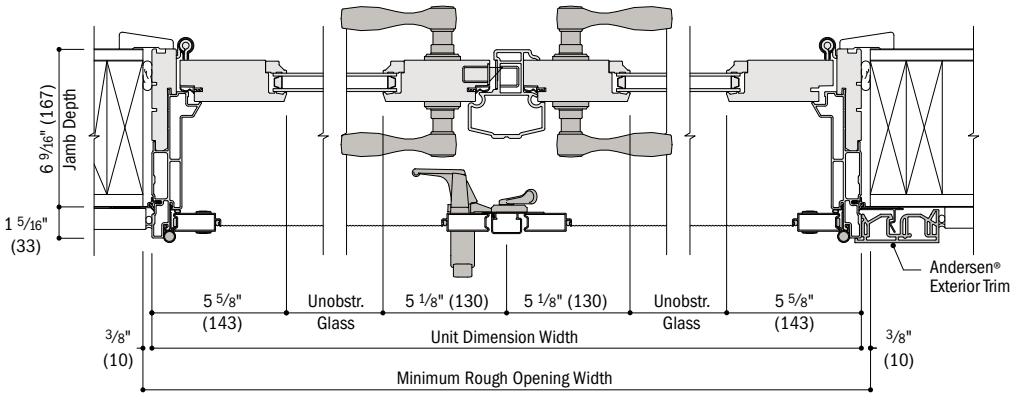

Horizontal Section

Two-Panel Active-Passive (**ARLR**/PALR), Taditional Panels, Hinged Insect Screen with Astragal

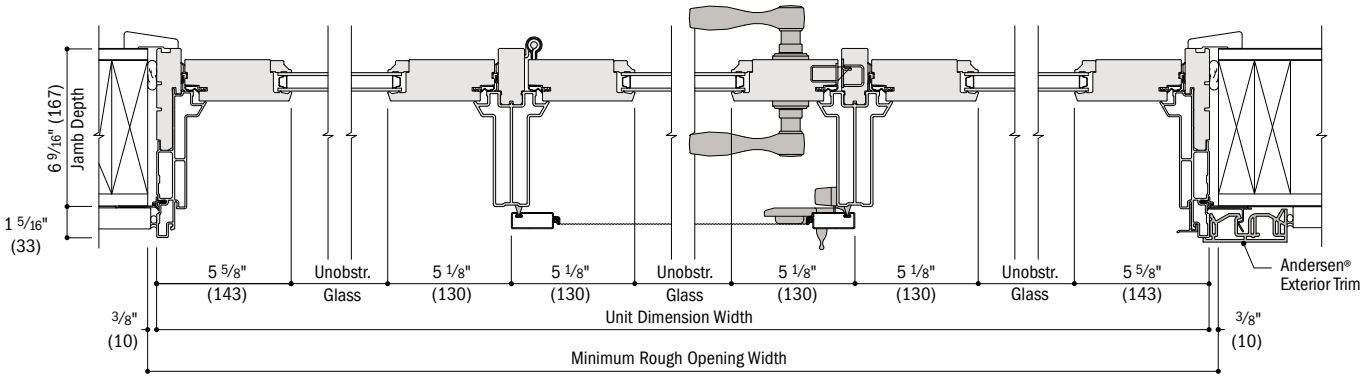

Horizontal Section

Three-Panel Stationary-Active-Stationary (**SASL**/SASR/ASSL/ASSR/SSAL/SSAR),
Traditional Panels, Top-Hung Gliding or Gliding Insect Screen

continued on next page

- 6 9/16" (167) base jamb depth measurement is from back side of installation flange.
- Light-colored areas are parts included with door. Dark-colored areas are additional Andersen® parts required to complete door assembly as shown.
- Dimensions in parentheses are in millimeters.
- **Rough openings may need to be increased to allow for use of building wraps, flashing, sill panning, brackets, fasteners or other items. See installation information on pages 226-227.**
- Details are for illustration only and are not intended to represent product installation methods or materials. Refer to product installation instructions at andersenwindows.com.

Hinged Inswing Patio Door Details – 6 9/16" (167) Base Jamb Depth with Traditional Panels *(continued)*

Scale 1 1/2" (38) = 1'-0" (305) – 1:8

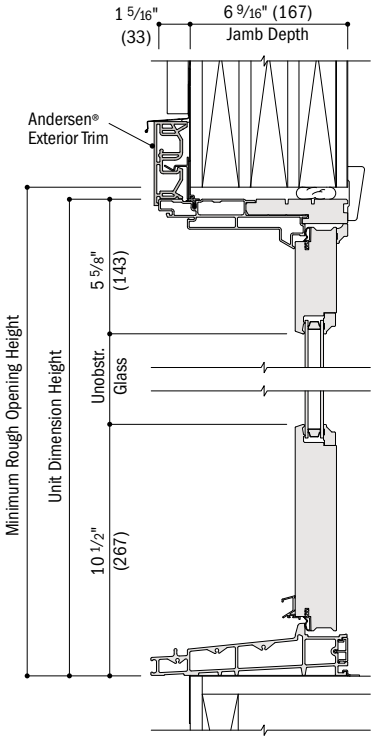

Vertical Section
Stationary, Traditional Panel

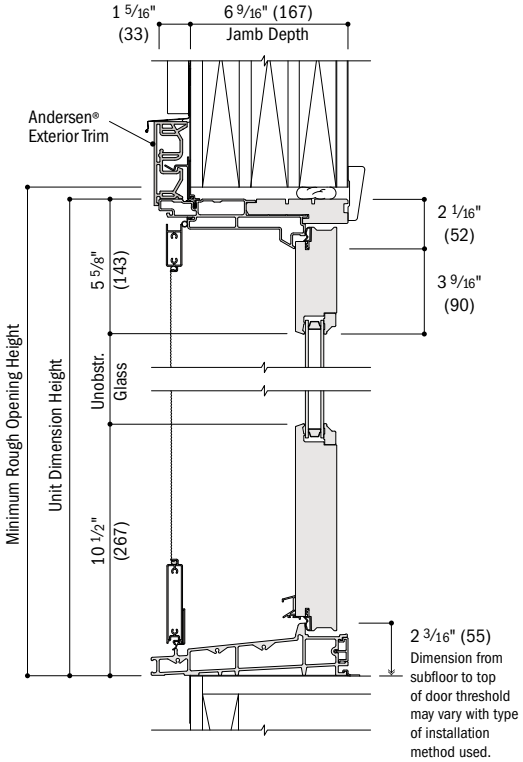

Vertical Section
Active, Traditional Panel, Hinged Insect Screen

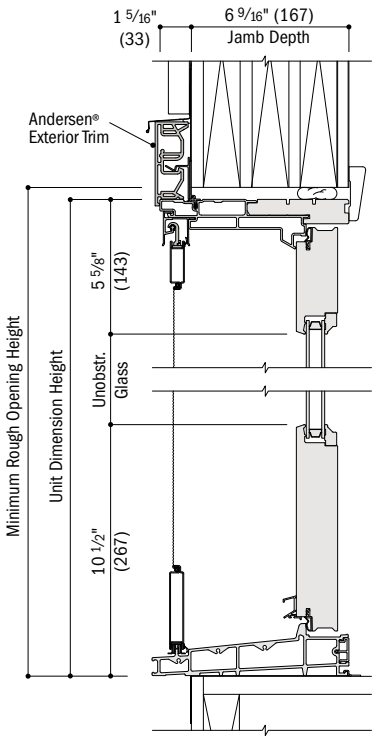

Vertical Section
Active, Traditional Panel, Top-Hung Gliding Insect Screen

For optional drop-nose channel and remodeler sill bracket details, see page 140.

See pages 168-171 for joining details.

- 6 9/16" (167) base jamb depth measurement is from back side of installation flange.
- Light-colored areas are parts included with door. Dark-colored areas are additional Andersen® parts required to complete door assembly as shown.
- Dimensions in parentheses are in millimeters.
- **Rough openings may need to be increased to allow for use of building wraps, flashing, sill panning, brackets, fasteners or other items. See installation information on pages 226-227.**
- Details are for illustration only and are not intended to represent product installation methods or materials. Refer to product installation instructions at andersenwindows.com.

Hinged Inswing Patio Door Details – 4 9/16" (116) Base Jamb Depth with Traditional Panels

Scale 1 1/2" (38) = 1'-0" (305) — 1:8

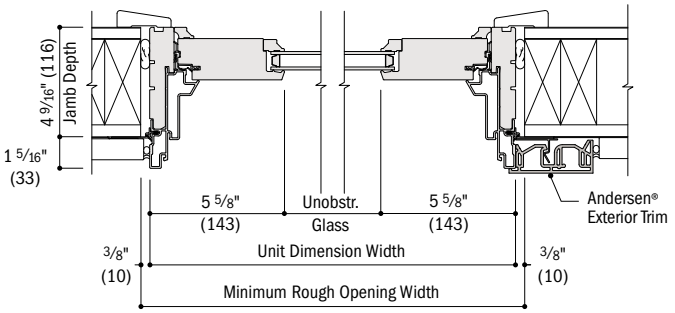

Horizontal Section

Stationary (**S**), Traditional Panel

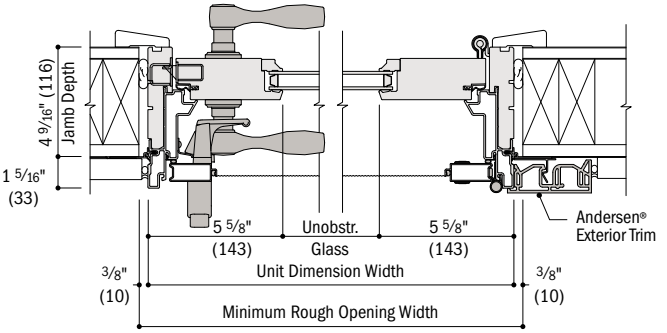

Horizontal Section

Active (**AR**/AL), Traditional Panel, Hinged Insect Screen

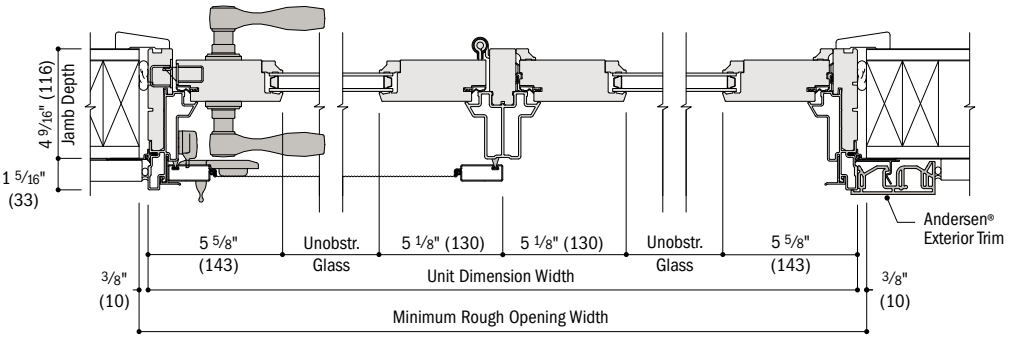

Horizontal Section

Two-Panel Active-Stationary (**ASR**/ASL/SAL/SAR), Traditional Panels, Top-Hung Gliding or Gliding Insect Screen

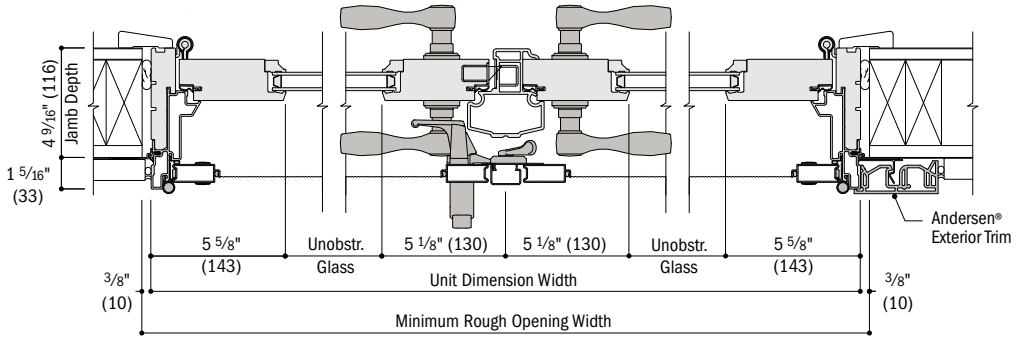

Horizontal Section

Two-Panel Active-Passive (**APLR**/PALR), Taditional Panels, Hinged Insect Screen

continued on next page

- 4 9/16" (116) base jamb depth measurement is from back side of installation flange.
- Light-colored areas are parts included with door. Dark-colored areas are additional Andersen® parts required to complete door assembly as shown.
- Dimensions in parentheses are in millimeters.
- **Rough openings may need to be increased to allow for use of building wraps, flashing, sill panning, brackets, fasteners or other items. See installation information on pages 226-227.**
- Details are for illustration only and are not intended to represent product installation methods or materials. Refer to product installation instructions at andersenwindows.com.

Hinged Inswing Patio Door Details – 4 9/16" (116) Base Jamb Depth with Traditional Panels *(continued)*

Scale 1 1/2" (38) = 1'-0" (305) – 1:8

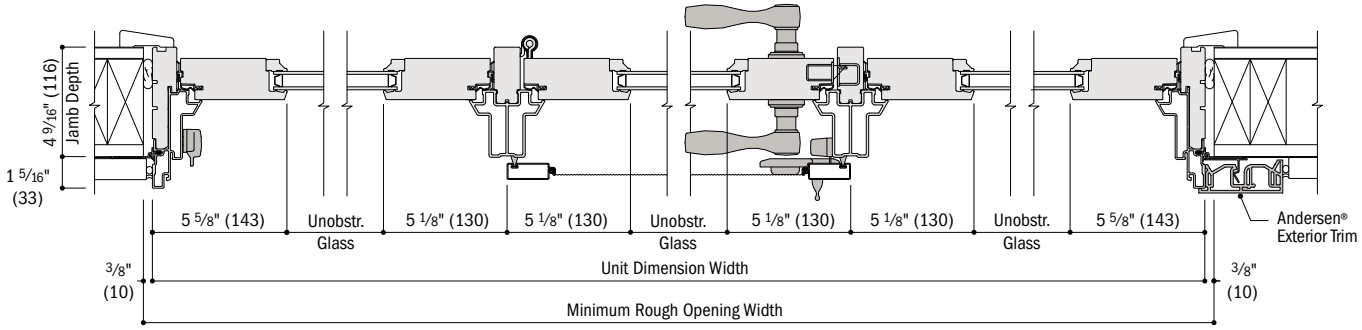

Horizontal Section
Three-Panel Stationary-Active-Stationary (**SASL**/SASR/ASSL/ASSR/SSAL/SSAR), Traditional Panels, Top-Hung Gliding or Gliding Insect Screen

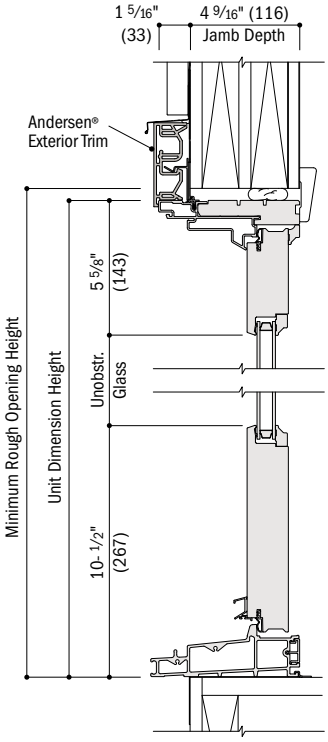

Vertical Section
Stationary, Traditional Panel

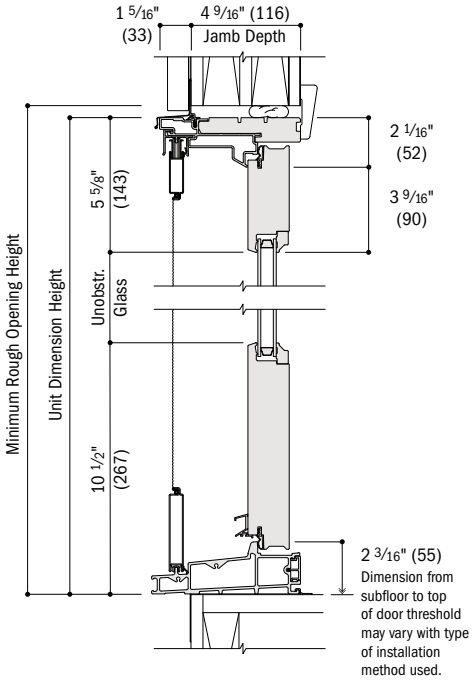

Vertical Section
Active, Traditional Panel, Gliding Insect Screen

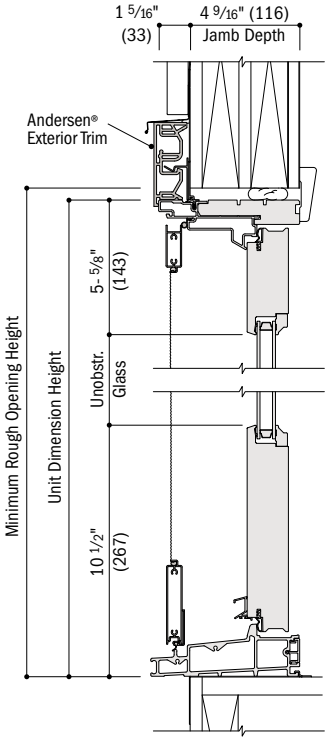

Vertical Section
Active, Traditional Panel, Hinged Insect Screen

For optional drop-nose channel and remodeler sill bracket details, see page 140.

See pages 168-171 for joining details.

- 4 9/16" (116) base jamb depth measurement is from back side of installation flange.
- Light-colored areas are parts included with door. Dark-colored areas are additional Andersen® parts required to complete door assembly as shown.
- Dimensions in parentheses are in millimeters.
- **Rough openings may need to be increased to allow for use of building wraps, flashing, sill panning, brackets, fasteners or other items. See installation information on pages 226-227.**
- Details are for illustration only and are not intended to represent product installation methods or materials. Refer to product installation instructions at andersenwindows.com.

Hinged Inswing Patio Door Details – 6 9/16" (167) Base Jamb Depth with Contemporary Panels

Scale 1 1/2" (38) = 1'-0" (305) – 1:8

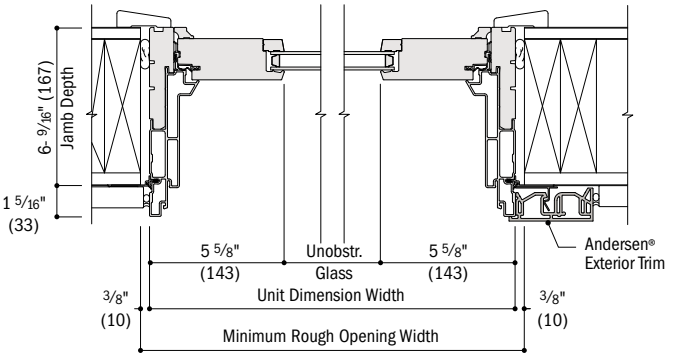

Horizontal Section

Stationary (**S**), Contemporary Panel

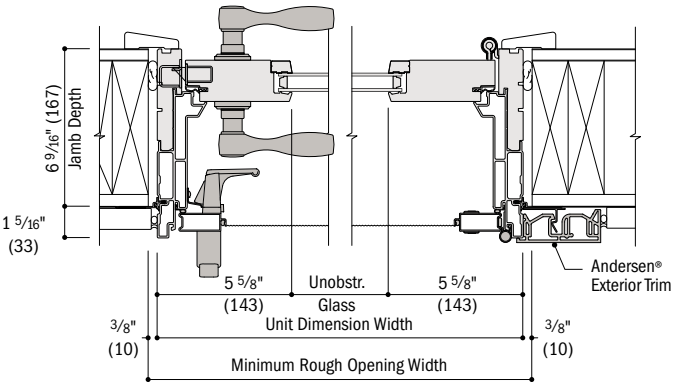

Horizontal Section

Active (**AR**/AL), Contemporary Panel, Hinged Insect Screen

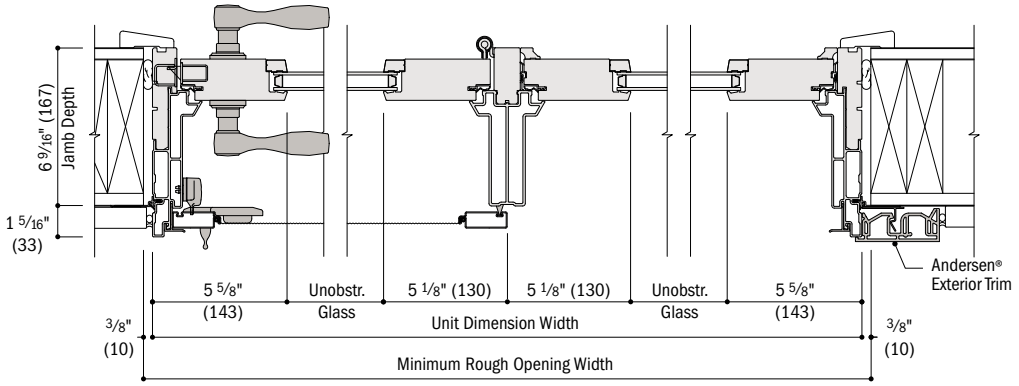

Horizontal Section

Two-Panel Active-Stationary (**ASR**/ASL/SAL/SAR), Contemporary Panels, Top-Hung Gliding or Gliding Insect Screen

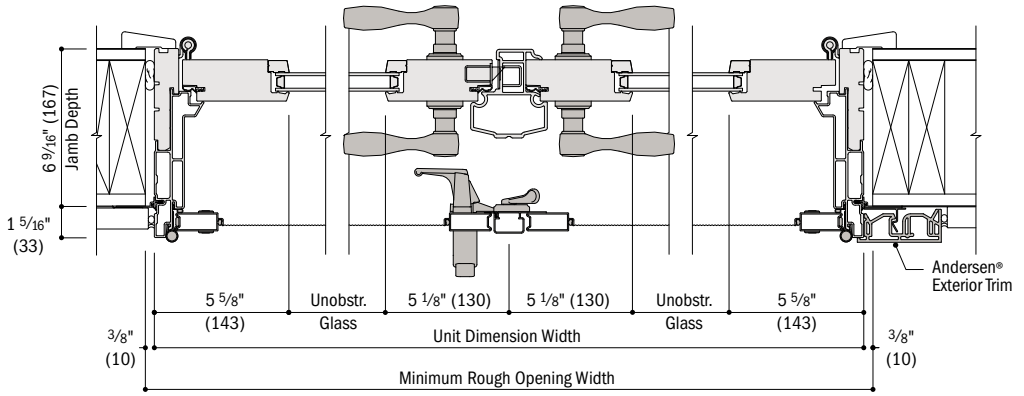

Horizontal Section

Two-Panel Active-Passive (**APLR**/PALR), Contemporary Panels, Hinged Insect Screen with Astragal

continued on next page

- 6 9/16" (167) base jamb depth measurement is from back side of installation flange.
- Light-colored areas are parts included with door. Dark-colored areas are additional Andersen® parts required to complete door assembly as shown.
- Dimensions in parentheses are in millimeters.
- **Rough openings may need to be increased to allow for use of building wraps, flashing, sill panning, brackets, fasteners or other items. See installation information on pages 226-227.**
- Details are for illustration only and are not intended to represent product installation methods or materials. Refer to product installation instructions at andersenwindows.com.

Hinged Inswing Patio Door Details – 6 9/16" (167) Base Jamb Depth with Contemporary Panels *(continued)*

Scale 1 1/2" (38) = 1'-0" (305) – 1:8

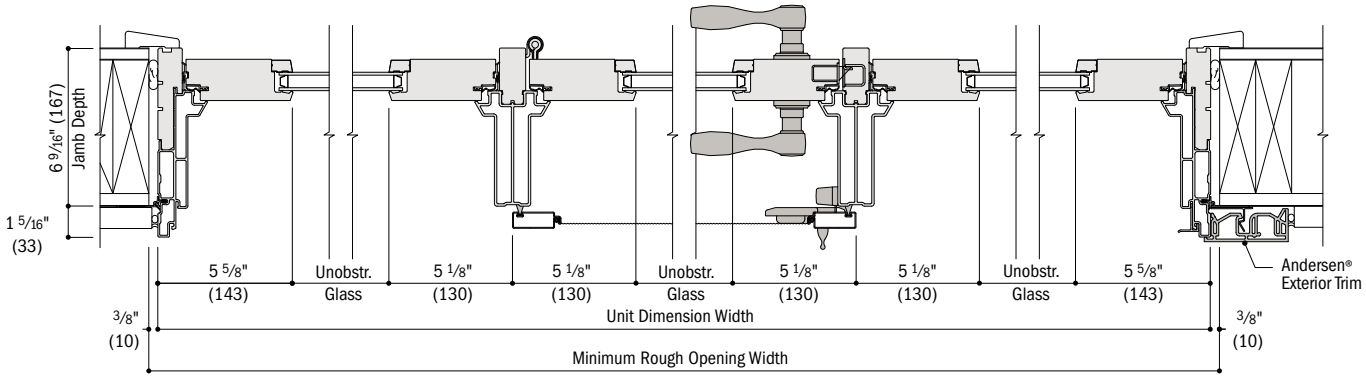

Horizontal Section

Three-Panel Stationary-Active-Stationary (**SASL**/SASR/ASSL/ASSR/SSAL/SSAR), Contemporary Panels, Top-Hung Gliding or Gliding Insect Screen

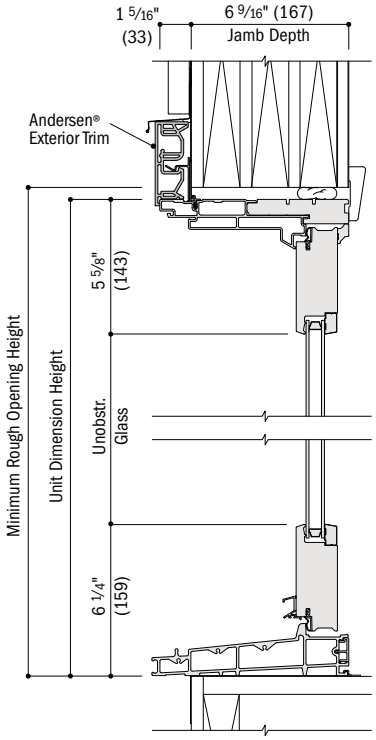

Vertical Section

Stationary, Contemporary Panel

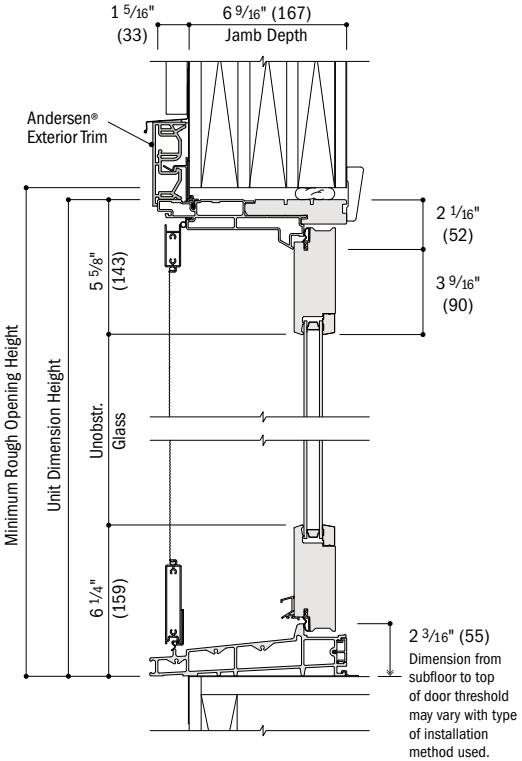

Vertical Section

Active, Contemporary Panel, Hinged Insect Screen

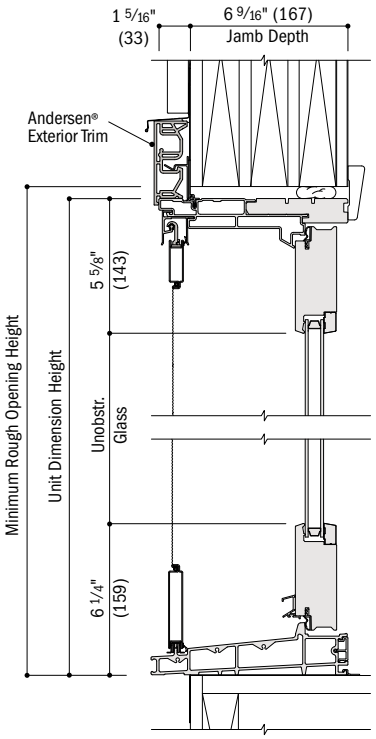

Vertical Section

Active, Contemporary Panel, Top-Hung Gliding Insect Screen

For optional drop-nose channel and remodeler sill bracket details, see page 140.

See pages 168-171 for joining details.

- 6 9/16" (167) base jamb depth measurement is from back side of installation flange.
- Light-colored areas are parts included with door. Dark-colored areas are additional Andersen® parts required to complete door assembly as shown.
- Dimensions in parentheses are in millimeters.
- **Rough openings may need to be increased to allow for use of building wraps, flashing, sill panning, brackets, fasteners or other items. See installation information on pages 226-227.**
- Details are for illustration only and are not intended to represent product installation methods or materials. Refer to product installation instructions at andersenwindows.com.

Hinged Inswing Patio Door Details – 4 9/16" (116) Base Jamb Depth with Contemporary Panels

Scale 1 1/2" (38) = 1'-0" (305) — 1:8

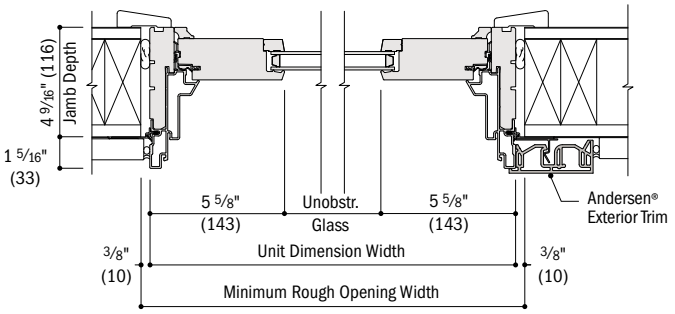

Horizontal Section

Stationary (**S**), Contemporary Panel

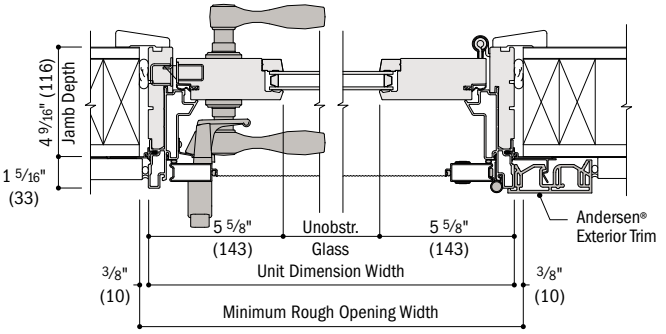

Horizontal Section

Active (**AR**/AL), Contemporary Panel, Hinged Insect Screen

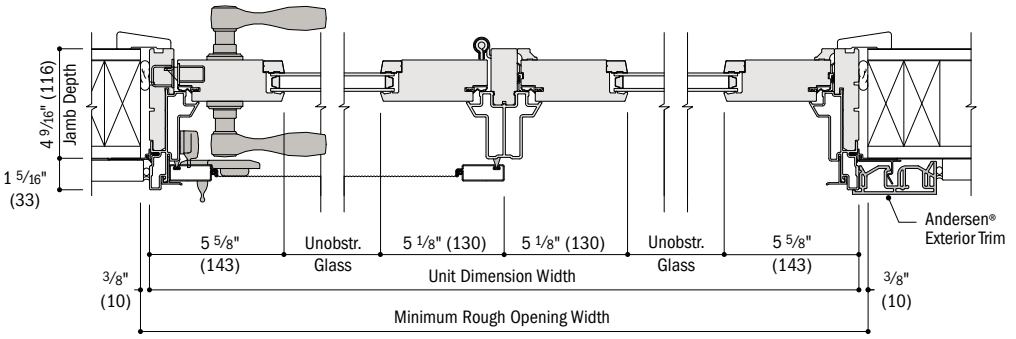

Horizontal Section

Two-Panel Active-Stationary (**ASR**/ASL/SAL/SAR), Contemporary Panels, Top-Hung Gliding or Gliding Insect Screen

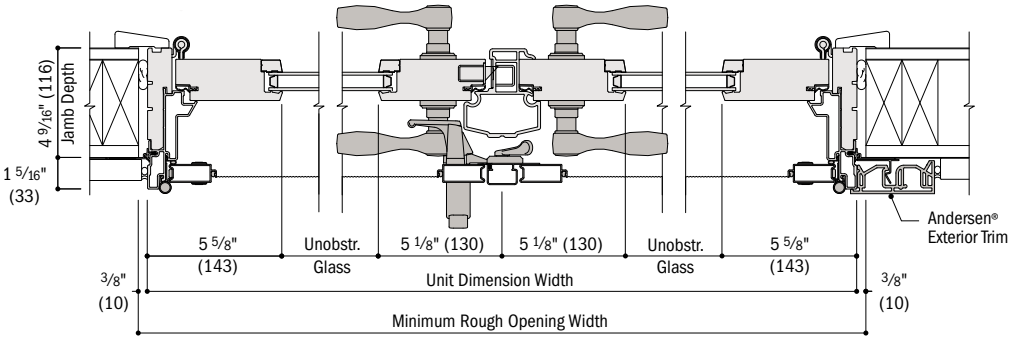

Horizontal Section — Two-Panel Active-Passive (**APLR**/PALR)

Two-Panel Active-Passive (**APLR**/PALR), Contemporary Panels, Hinged Insect Screen

continued on next page

- 4 9/16" (116) base jamb depth measurement is from back side of installation flange.
- Light-colored areas are parts included with door. Dark-colored areas are additional Andersen® parts required to complete door assembly as shown.
- Dimensions in parentheses are in millimeters.
- **Rough openings may need to be increased to allow for use of building wraps, flashing, sill panning, brackets, fasteners or other items. See installation information on pages 226-227.**
- Details are for illustration only and are not intended to represent product installation methods or materials. Refer to product installation instructions at andersenwindows.com.

Hinged Inswing Patio Door Details – 4 9/16" (116) Base Jamb Depth with Contemporary Panels *(continued)*

Scale 1 1/2" (38) = 1'-0" (305) – 1:8

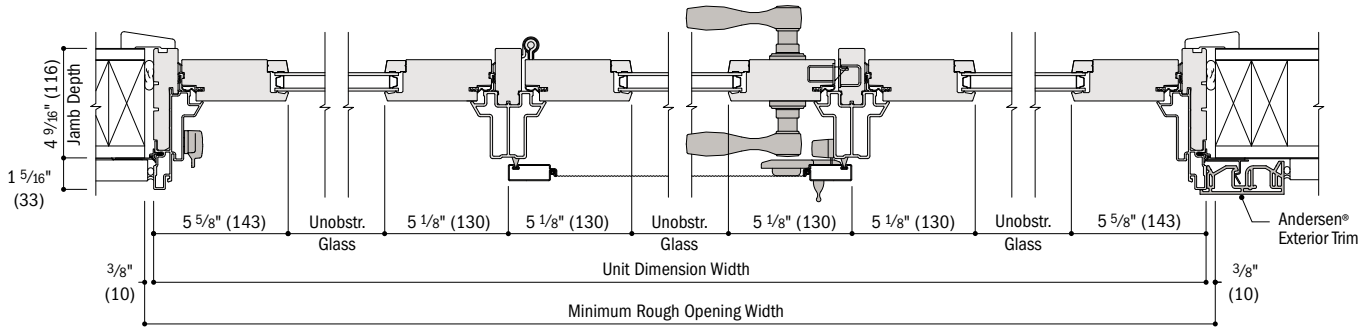

Horizontal Section

Three-Panel Stationary-Active-Stationary (**SASL**/SASR/ASSL/ASSR/SSAL/SSAR), Contemporary Panels, Top-Hung Gliding or Gliding Insect Screen

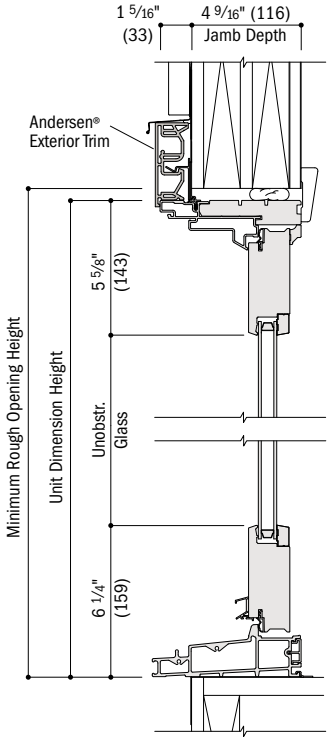

Vertical Section

Stationary, Contemporary Panel

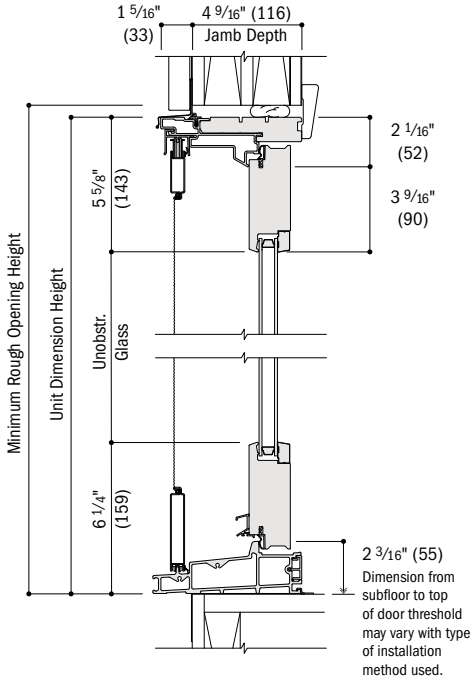

Vertical Section

Active, Contemporary Panel, Gliding Insect Screen

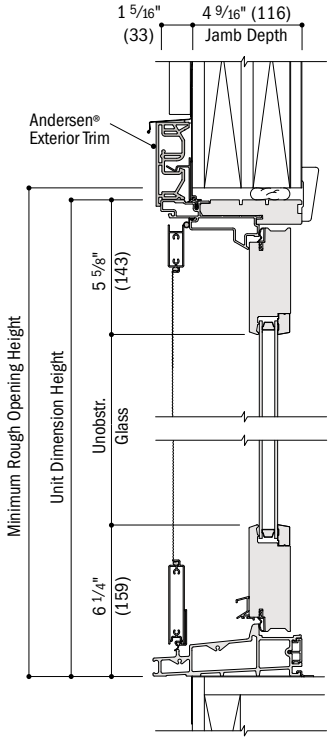

Vertical Section

Active, Contemporary Panel, Hinged Insect Screen

For optional drop-nose channel and remodeler sill bracket details, see page 140.

See pages 168-171 for joining details.

- 4 9/16" (116) base jamb depth measurement is from back side of installation flange.
- Light-colored areas are parts included with door. Dark-colored areas are additional Andersen® parts required to complete door assembly as shown.
- Dimensions in parentheses are in millimeters.
- **Rough openings may need to be increased to allow for use of building wraps, flashing, sill panning, brackets, fasteners or other items. See installation information on pages 226-227.**
- Details are for illustration only and are not intended to represent product installation methods or materials. Refer to product installation instructions at andersenwindows.com.

Table of Hinged Outswing Patio Door Sizes

Scale 1/8" (3) = 1'-0" (305) — 1:96

Door Dimension	2'-0 1/8" (612)	2'-0 1/8" (612)	2'-0 1/8" (612)	3'-11 1/4" (1200)	2'-6 1/8" (764)	2'-6 1/8" (764)	2'-6 1/8" (764)	4'-11 1/4" (1505)
Minimum Rough Opening	2'-1" (634)	2'-1" (634)	2'-1" (634)	4'-0" (1219)	2'-7" (787)	2'-7" (787)	2'-7" (787)	5'-0" (1524)
Unobstructed Glass (single panel only)	12 7/8" (327)	12 7/8" (327)	12 7/8" (327)	12 7/8" (327)	18 7/8" (479)	18 7/8" (479)	18 7/8" (479)	18 7/8" (479)
4 heights	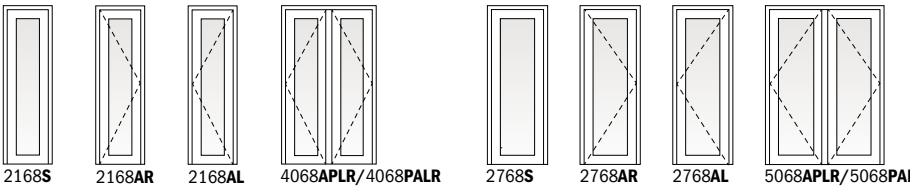							
1 FWOD/FWOCD	2168**S**	2168**AR**	2168**AL**	4068**APLR**/4068**PALR**	2768**S**	2768**AR**	2768**AL**	5068**APLR**/5068**PALR**
2 FWOD/FWOCD	21611**S**	21611**AR**	21611**AL**	40611**APLR**/40611**PALR**	27611**S**	27611**AR**	27611**AL**	50611**APLR**/50611**PALR**
3 FWOD/FWOCD	2180**S**	2180**AR**	2180**AL**	4080**APLR**/4080**PALR**	2780**S**	2780**AR**	2780**AL**	5080**APLR**/5080**PALR**
4 FWOD/FWOCD	21100**S**	21100**AR**	21100**AL**	40100**APLR**/40100**PALR**	27100**S**	27100**AR**	27100**AL**	50100**APLR**/50100**PALR**

Custom-size patio doors are available in 1/8" (3) increments. See pages 173 and 175 for custom sizes, specifications and information on shipping patio doors greater than 8' (2438).

Door Dimension	2'-8 1/8" (815)	2'-8 1/8" (815)	2'-8 1/8" (815)	5'-3 1/4" (1607)	3'-0 1/8" (917)	3'-0 1/8" (917)	3'-0 1/8" (917)	5'-11 1/4" (1810)
Minimum Rough Opening	2'-9" (838)	2'-9" (838)	2'-9" (838)	5'-4" (1626)	3'-1" (940)	3'-1" (940)	3'-1" (940)	6'-0" (1829)
Unobstructed Glass (single panel only)	20 7/8" (530)	20 7/8" (530)	20 7/8" (530)	20 7/8" (530)	24 7/8" (632)	24 7/8" (632)	24 7/8" (632)	24 7/8" (632)
4 heights	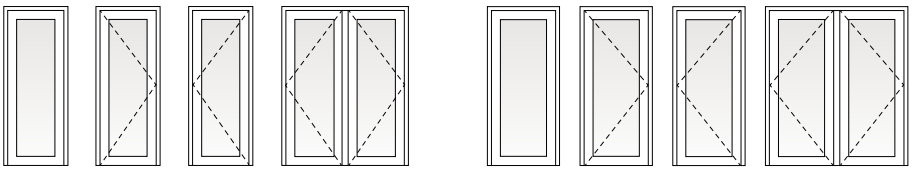							
1 FWOD/FWOCD	2968**S**	2968**AR**	2968**AL**	5468**APLR**/5468**PALR**	3168**S**	3168**AR**	3168**AL**	6068**APLR**/6068**PALR**
2 FWOD/FWOCD	29611**S**	29611**AR**	29611**AL**	54611**APLR**/54611**PALR**	31611**S**	31611**AR**	31611**AL**	60611**APLR**/60611**PALR**
3 FWOD/FWOCD	2980**S**	2980**AR**	2980**AL**	5480**APLR**/5480**PALR**	3180**S**	3180**AR**	3180**AL**	6080**APLR**/6080**PALR**
4 FWOD/FWOCD	29100**S**	29100**AR**	29100**AL**	54100**APLR**/54100**PALR**	31100**S**	31100**AR**	31100**AL**	60100**APLR**/60100**PALR**

Choose traditional (**FWOD**) or contemporary (**FWOCD**) panel. Contemporary panels shown. Stationary (**S**) patio doors can be used as an individual patio door or a sidelight.

Grille patterns shown on page 151. Details shown on pages 153-155.

Door Dimension	3'-2 1/8" (968)	3'-2 1/8" (968)	3'-2 1/8" (968)	6'-3 1/4" (1911)
Minimum Rough Opening	3'-3" (991)	3'-3" (991)	3'-3" (991)	6'-4" (1930)
Unobstructed Glass (single panel only)	26 7/8" (683)	26 7/8" (683)	26 7/8" (683)	26 7/8" (683)
4 heights	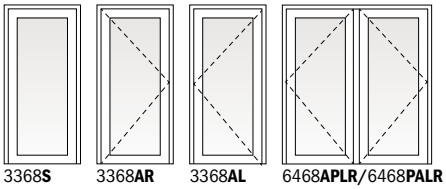			
1 FWOD/FWOCD	3368**S**	3368**AR**	3368**AL**	6468**APLR**/6468**PALR**
2 FWOD/FWOCD	33611**S**	33611**AR**	33611**AL**	64611**APLR**/64611**PALR**
3 FWOD/FWOCD	3380**S**	3380**AR**	3380**AL**	6480**APLR**/6480**PALR**
4 FWOD/FWOCD	33100**S**	33100**AR**	33100**AL**	64100**APLR**/64100**PALR**

- "Door Dimension" always refers to outside frame-to-frame dimension.
- "**Minimum Rough Opening**" **dimensions may need to be increased to allow for use of building wraps, flashing, sill panning, brackets, fasteners or other items. See pages 226-227 for more details.**
- Dimensions in parentheses are in millimeters.

Identification and Order Designation Description

Viewed from the exterior. Traditional panels shown.

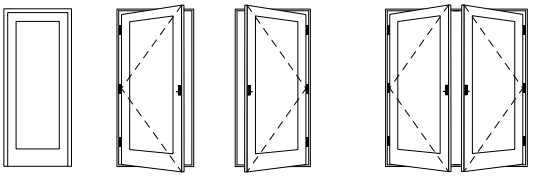

Stationary (non-operating panel) | **Left Hinged** (hinges on left) | **Right Hinged** (hinges on right) | **Active Panel** (operating panel used most often) | **Passive Panel** (operating panel with attached astragal)

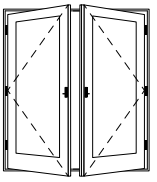

FWOD FWOCD — Hinged Outswing Patio Door with Traditional (**FWOD**) or Contemporary (**FWOCD**) Panels

6068 — Door Rough Opening

A — Active Panel (panel used most often)

P — Passive Panel

L — Left Hinged

R — Right Hinged

Four Patio Door Heights

Traditional Panels

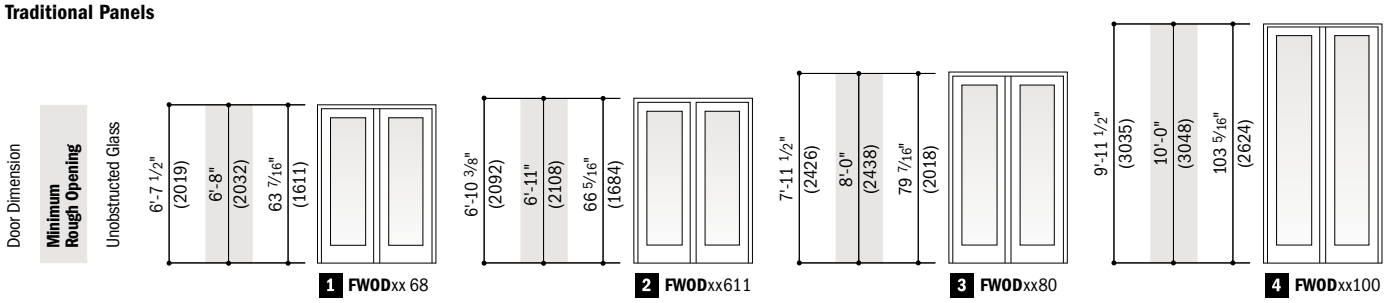

Contemporary Panels

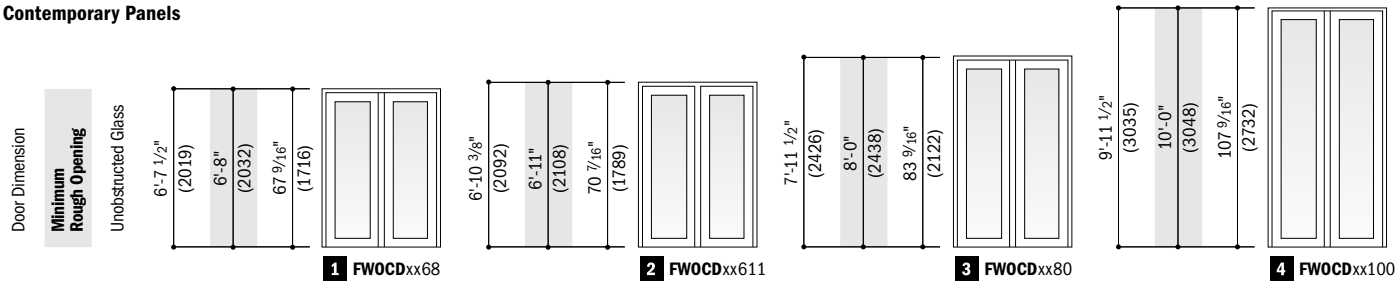

Grille Patterns

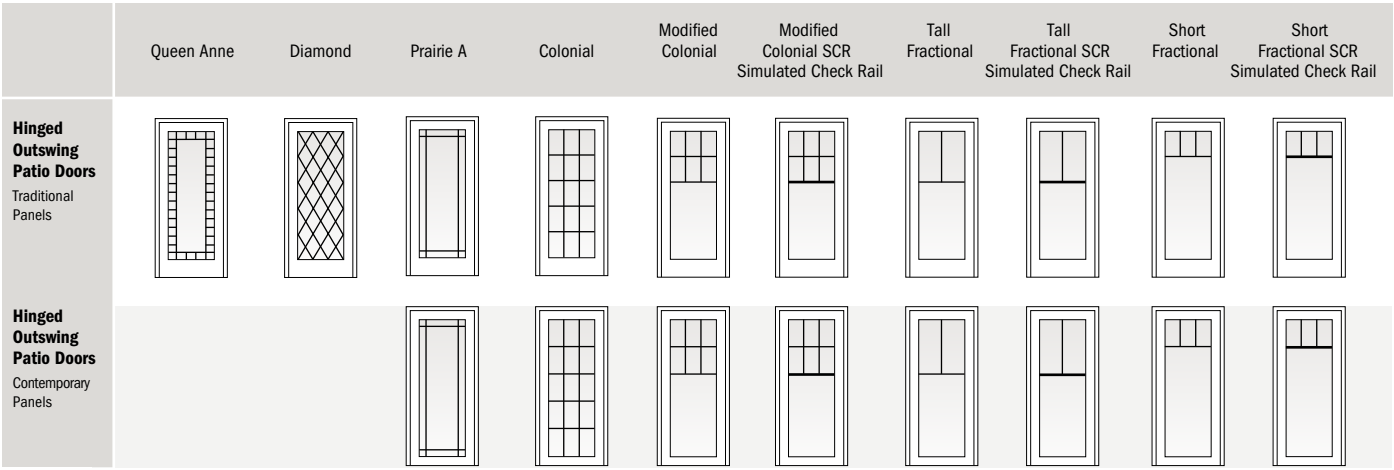

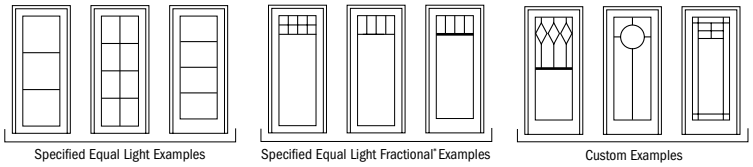

Number of lights and overall pattern varies with patio door size. Patterns may not be available in all configuration or sizes. Specified equal light, specified equal light fractional and custom patterns are also available. For more grille options, see page 19 or visit **andersenwindows.com/grilles.**

*Bottom horizontal bar located at center or at custom dimensions.

Hinged Outswing Patio Door Opening and Area Specifications

Door Number	Number of Panels in Open Position*	Clear Opening Sq. Ft./(m²)	Clear Opening Maximums: 90° Width Inches/(mm)	Clear Opening Maximums: Full Width Inches/(mm)	Clear Opening Maximums: Height Inches/(mm)	Traditional Panel Glass Area Sq. Ft./(m²)	Contemporary Panel Glass Area Sq. Ft./(m²)	Vent Sq. Ft./(m²)	Overall Door Area Sq. Ft./(m²)
FWOD/FWOCD2168	1	10.94 (1.02)	19 1/16" (484)	20 3/4" (527)	76 1/8" (1934)	5.67 (0.53)	6.04 (0.56)	10.94 (1.02)	13.30 (1.24)
FWOD/FWOCD2768	1	14.11 (1.31)	25 1/16" (637)	26 3/4" (679)	76 1/8" (1934)	8.31 (0.77)	8.86 (0.82)	14.11 (1.31)	16.61 (1.54)
FWOD/FWOCD2968	1	15.17 (1.41)	27 1/16" (687)	28 3/4" (730)	76 1/8" (1934)	9.20 (0.85)	9.80 (0.91)	15.17 (1.41)	17.72 (1.65)
FWOD/FWOCD3168	1	17.28 (1.61)	31 1/16" (789)	32 3/4" (832)	76 1/8" (1934)	10.96 (1.02)	11.68 (1.09)	17.28 (1.61)	19.93 (1.85)
FWOD/FWOCD3368	1	18.34 (1.70)	33 1/16" (840)	34 3/4" (883)	76 1/8" (1934)	11.84 (1.10)	12.61 (1.17)	18.34 (1.70)	21.03 (1.95)
FWOD/FWOCD4068	2	23.18 (2.15)	40 5/8" (1032)	43 7/8" (1114)	76 1/8" (1934)	11.34 (1.05)	12.09 (1.12)	23.18 (2.15)	26.09 (2.42)
FWOD/FWOCD4068	1	10.89 (1.01)	19" (483)	20 5/8" (524)	76 1/8" (1934)	11.34 (1.05)	12.09 (1.12)	10.89 (1.01)	26.09 (2.42)
FWOD/FWOCD5068	2	29.52 (2.74)	52 5/8" (1337)	55 7/8" (1419)	76 1/8" (1934)	16.63 (1.54)	17.72 (1.65)	29.52 (2.74)	32.71 (3.04)
FWOD/FWOCD5068	1	14.07 (1.31)	25" (635)	26 5/8" (676)	76 1/8" (1934)	16.63 (1.54)	17.72 (1.65)	14.07 (1.31)	32.71 (3.04)
FWOD/FWOCD5468	2	31.63 (2.94)	56 5/8" (1438)	59 7/8" (1521)	76 1/8" (1934)	18.39 (1.71)	19.60 (1.82)	31.63 (2.94)	34.92 (3.24)
FWOD/FWOCD5468	1	15.12 (1.40)	27" (686)	28 5/8" (727)	76 1/8" (1934)	18.39 (1.71)	19.60 (1.82)	15.12 (1.40)	34.92 (3.24)
FWOD/FWOCD6068	2	35.86 (3.33)	64 5/8" (1641)	67 7/8" (1724)	76 1/8" (1934)	21.92 (2.04)	23.35 (2.17)	35.86 (3.33)	39.34 (3.65)
FWOD/FWOCD6068	1	17.24 (1.60)	31" (787)	32 5/8" (829)	76 1/8" (1934)	21.92 (2.04)	23.35 (2.17)	17.24 (1.60)	39.34 (3.65)
FWOD/FWOCD6468	2	37.97 (3.53)	68 5/8" (1743)	71 7/8" (1826)	76 1/8" (1934)	23.68 (2.20)	25.23 (2.34)	37.97 (3.53)	41.54 (3.86)
FWOD/FWOCD6468	1	18.29 (1.70)	33" (838)	34 5/8" (879)	76 1/8" (1934)	23.68 (2.20)	25.23 (2.34)	18.29 (1.70)	41.54 (3.86)
FWOD/FWOCD21611	1	11.35 (1.05)	19 1/16" (484)	20 3/4" (527)	79" (2007)	5.93 (0.55)	6.30 (0.59)	11.35 (1.05)	13.78 (1.28)
FWOD/FWOCD27611	1	14.64 (1.36)	25 1/16" (637)	26 3/4" (679)	79" (2007)	8.69 (0.81)	9.24 (0.86)	14.64 (1.36)	17.22 (1.60)
FWOD/FWOCD29611	1	15.74 (1.46)	27 1/16" (687)	28 3/4" (730)	79" (2007)	9.61 (0.89)	10.21 (0.95)	15.74 (1.46)	18.36 (1.71)
FWOD/FWOCD31611	1	17.93 (1.67)	31 1/16" (789)	32 3/4" (832)	79" (2007)	11.45 (1.06)	12.17 (1.13)	17.93 (1.67)	20.65 (1.92)
FWOD/FWOCD33611	1	19.03 (1.77)	33 1/16" (840)	34 3/4" (883)	79" (2007)	12.38 (1.15)	13.15 (1.22)	19.03 (1.77)	21.79 (2.02)
FWOD/FWOCD40611	2	24.05 (2.23)	40 5/8" (1032)	43 7/8" (1114)	79" (2007)	11.86 (1.10)	12.60 (1.17)	24.05 (2.23)	27.03 (2.51)
FWOD/FWOCD40611	1	11.31 (1.05)	19" (483)	20 5/8" (524)	79" (2007)	11.86 (1.10)	12.60 (1.17)	11.31 (1.05)	27.03 (2.51)
FWOD/FWOCD50611	2	30.63 (2.85)	52 5/8" (1337)	55 7/8" (1419)	79" (2007)	17.38 (1.61)	18.47 (1.72)	30.63 (2.85)	33.89 (3.15)
FWOD/FWOCD50611	1	14.60 (1.36)	25" (635)	26 5/8" (676)	79" (2007)	17.38 (1.61)	18.47 (1.72)	14.60 (1.36)	33.89 (3.15)
FWOD/FWOCD54611	2	32.83 (3.05)	56 5/8" (1438)	59 7/8" (1521)	79" (2007)	19.22 (1.79)	20.43 (1.90)	32.83 (3.05)	36.18 (3.36)
FWOD/FWOCD54611	1	15.69 (1.46)	27" (686)	28 5/8" (727)	79" (2007)	19.22 (1.79)	20.43 (1.90)	15.69 (1.46)	36.18 (3.36)
FWOD/FWOCD60611	2	37.21 (3.46)	64 5/8" (1641)	67 7/8" (1724)	79" (2007)	22.91 (2.13)	24.34 (2.26)	37.21 (3.46)	40.76 (3.79)
FWOD/FWOCD60611	1	17.89 (1.66)	31" (787)	32 5/8" (829)	79" (2007)	22.91 (2.13)	24.34 (2.26)	17.89 (1.66)	40.76 (3.79)
FWOD/FWOCD64611	2	39.41 (3.66)	68 5/8" (1743)	71 7/8" (1826)	79" (2007)	24.75 (2.30)	26.30 (2.44)	39.41 (3.66)	43.05 (4.00)
FWOD/FWOCD64611	1	18.98 (1.76)	33" (838)	34 5/8" (879)	79" (2007)	24.75 (2.30)	26.30 (2.44)	18.98 (1.76)	43.05 (4.00)
FWOD/FWOCD2180	1	13.24 (1.23)	19 1/16" (484)	20 3/4" (527)	92 1/8" (2340)	7.10 (0.66)	7.47 (0.69)	13.24 (1.23)	15.98 (1.48)
FWOD/FWOCD2780	1	17.07 (1.59)	25 1/16" (637)	26 3/4" (679)	92 1/8" (2340)	10.41 (0.97)	10.96 (1.02)	17.07 (1.59)	19.96 (1.85)
FWOD/FWOCD2980	1	18.35 (1.71)	27 1/16" (687)	28 3/4" (730)	92 1/8" (2340)	11.52 (1.07)	12.12 (1.13)	18.35 (1.71)	21.28 (1.98)
FWOD/FWOCD3180	1	20.91 (1.94)	31 1/16" (789)	32 3/4" (832)	92 1/8" (2340)	13.72 (1.27)	14.44 (1.34)	20.91 (1.94)	23.94 (2.22)
FWOD/FWOCD3380	1	22.19 (2.06)	33 1/16" (840)	34 3/4" (883)	92 1/8" (2340)	14.82 (1.38)	15.60 (1.45)	22.19 (2.06)	25.26 (2.35)
FWOD/FWOCD4080	2	28.05 (2.61)	40 5/8" (1032)	43 7/8" (1114)	92 1/8" (2340)	14.20 (1.32)	14.95 (1.39)	28.05 (2.61)	31.34 (2.91)
FWOD/FWOCD4080	1	13.18 (1.22)	19" (483)	20 5/8" (524)	92 1/8" (2340)	14.20 (1.32)	14.95 (1.39)	13.18 (1.22)	31.34 (2.91)
FWOD/FWOCD5080	2	35.72 (3.32)	52 5/8" (1337)	55 7/8" (1419)	92 1/8" (2340)	20.82 (1.93)	21.91 (2.04)	35.72 (3.32)	39.29 (3.65)
FWOD/FWOCD5080	1	17.02 (1.58)	25" (635)	26 5/8" (676)	92 1/8" (2340)	20.82 (1.93)	21.91 (2.04)	17.02 (1.58)	39.29 (3.65)
FWOD/FWOCD5480	2	38.28 (3.56)	56 5/8" (1438)	59 7/8" (1521)	92 1/8" (2340)	23.03 (2.14)	24.23 (2.25)	38.28 (3.56)	41.95 (3.90)
FWOD/FWOCD5480	1	18.30 (1.70)	27" (686)	28 5/8" (727)	92 1/8" (2340)	23.03 (2.14)	24.23 (2.25)	18.30 (1.70)	41.95 (3.90)
FWOD/FWOCD6080	2	43.40 (4.03)	64 5/8" (1641)	67 7/8" (1724)	92 1/8" (2340)	27.44 (2.55)	28.88 (2.68)	43.40 (4.03)	47.25 (4.39)
FWOD/FWOCD6080	1	20.86 (1.94)	31" (787)	32 5/8" (829)	92 1/8" (2340)	27.44 (2.55)	28.88 (2.68)	20.86 (1.94)	47.25 (4.39)
FWOD/FWOCD6480	2	45.96 (4.27)	68 5/8" (1743)	71 7/8" (1826)	92 1/8" (2340)	29.65 (2.75)	31.20 (2.90)	45.96 (4.27)	49.91 (4.64)
FWOD/FWOCD6480	1	22.14 (2.06)	33" (838)	34 5/8" (879)	92 1/8" (2340)	29.65 (2.75)	31.20 (2.90)	22.14 (2.06)	49.91 (4.64)
FWOD/FWOCD21100	1	16.73 (1.55)	19 1/16" (484)	20 3/4" (527)	116 1/8" (2950)	9.25 (0.86)	9.62 (0.89)	16.73 (1.55)	19.99 (1.86)
FWOD/FWOCD27100	1	21.57 (2.00)	25 1/16" (637)	26 3/4" (679)	116 1/8" (2950)	13.56 (1.26)	14.10 (1.31)	21.57 (2.00)	24.97 (2.32)
FWOD/FWOCD29100	1	23.18 (2.15)	27 1/16" (687)	28 3/4" (730)	116 1/8" (2950)	14.99 (1.39)	15.60 (1.45)	23.18 (2.15)	26.63 (2.47)
FWOD/FWOCD31100	1	26.41 (2.45)	31 1/16" (789)	32 3/4" (832)	116 1/8" (2950)	17.87 (1.66)	18.59 (1.73)	26.41 (2.45)	29.95 (2.78)
FWOD/FWOCD33100	1	28.02 (2.60)	33 1/16" (840)	34 3/4" (883)	116 1/8" (2950)	19.30 (1.79)	20.08 (1.87)	28.02 (2.60)	31.61 (2.94)
FWOD/FWOCD40100	2	35.38 (3.29)	40 5/8" (1032)	43 7/8" (1114)	116 1/8" (2950)	18.50 (1.72)	19.24 (1.79)	35.38 (3.29)	39.21 (3.64)
FWOD/FWOCD40100	1	16.63 (1.55)	19" (483)	20 5/8" (524)	116 1/8" (2950)	18.50 (1.72)	19.24 (1.79)	16.63 (1.55)	39.21 (3.64)
FWOD/FWOCD50100	2	45.06 (4.19)	52 5/8" (1337)	55 7/8" (1419)	116 1/8" (2950)	27.11 (2.52)	28.20 (2.62)	45.06 (4.19)	49.17 (4.57)
FWOD/FWOCD50100	1	21.47 (1.99)	25" (635)	26 5/8" (676)	116 1/8" (2950)	27.11 (2.52)	28.20 (2.62)	21.47 (1.99)	49.17 (4.57)
FWOD/FWOCD54100	2	48.28 (4.49)	56 5/8" (1438)	59 7/8" (1521)	116 1/8" (2950)	29.99 (2.79)	31.19 (2.90)	48.28 (4.49)	52.49 (4.88)
FWOD/FWOCD54100	1	23.08 (2.14)	27" (686)	28 5/8" (727)	116 1/8" (2950)	29.99 (2.79)	31.19 (2.90)	23.08 (2.14)	52.49 (4.88)
FWOD/FWOCD60100	2	54.74 (5.09)	64 5/8" (1641)	67 7/8" (1724)	116 1/8" (2950)	35.73 (3.32)	37.17 (3.45)	54.74 (5.09)	59.13 (5.49)
FWOD/FWOCD60100	1	26.31 (2.45)	31" (787)	32 5/8" (829)	116 1/8" (2950)	35.73 (3.32)	37.17 (3.45)	26.31 (2.45)	59.13 (5.49)
FWOD/FWOCD64100	2	57.96 (5.39)	68 5/8" (1743)	71 7/8" (1826)	116 1/8" (2950)	38.61 (3.59)	40.16 (3.73)	57.96 (5.39)	62.45 (5.80)
FWOD/FWOCD64100	1	27.92 (2.59)	33" (838)	34 5/8" (879)	116 1/8" (2950)	38.61 (3.59)	40.16 (3.73)	27.92 (2.59)	62.45 (5.80)

* Dimensions in parentheses are in millimeters or square meters.
*For two-panel doors with only one panel open, clear opening is based on the active panel open and the passive panel closed.

Drop-Nose Channel

Optional drop-nose channel is available when higher product performance is required.

Wood and concrete installations shown.

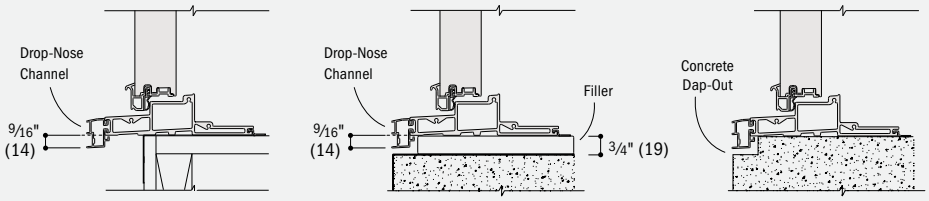

Sill Step

Optional sill step is available in oak or maple.

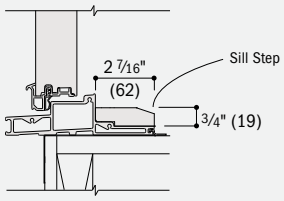

Hinged Outswing Patio Door Details – Traditional Panels

Scale 1 1/2" (38) = 1'-0" (305) – 1:8

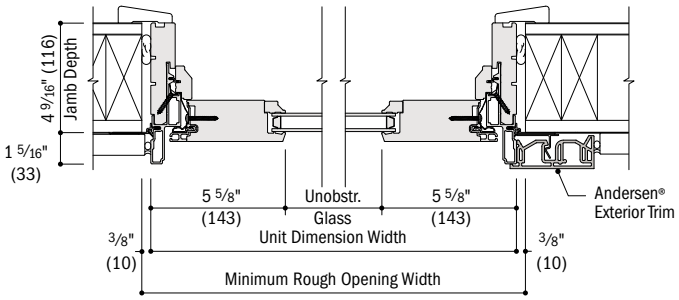

Horizontal Section
Stationary (**S**), Traditional Panel

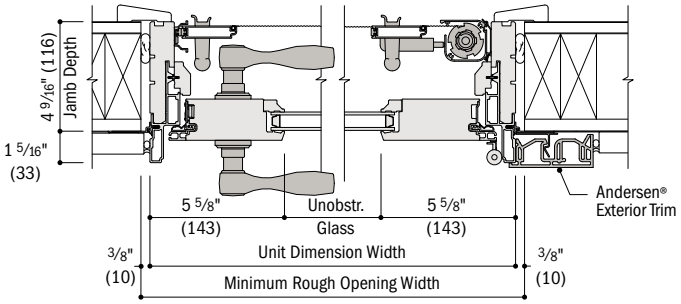

Horizontal Section
Active (**AR**/AL), Traditional Panel, Retractable Insect Screen

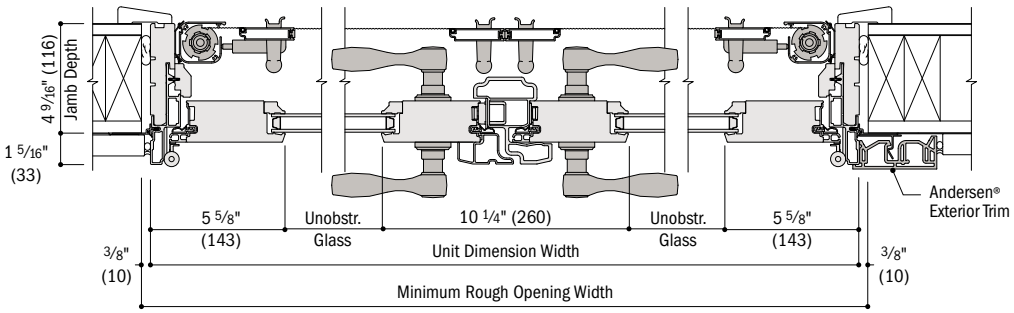

Horizontal Section
Two-Panel Active (**APLR**/PALR), Traditional Panels, Retractable Insect Screen

continued on next page

- 4 9/16" (116) base jamb depth measurement is from back side of installation flange.
- Light-colored areas are parts included with door. Dark-colored areas are additional Andersen® parts required to complete door assembly as shown.
- Dimensions in parentheses are in millimeters.
- **Minimum rough openings may need to be increased to allow for use of building wraps, flashing, sill panning, brackets, fasteners or other items. See installation information on page 226-227.**
- Details are for illustration only and are not intended to represent product installation methods or materials. Refer to product installation instructions at andersenwindows.com.

Hinged Outswing Patio Door Details – Traditional Panels *(continued)*

Scale 1 1/2" (38) = 1'-0" (305) – 1:8

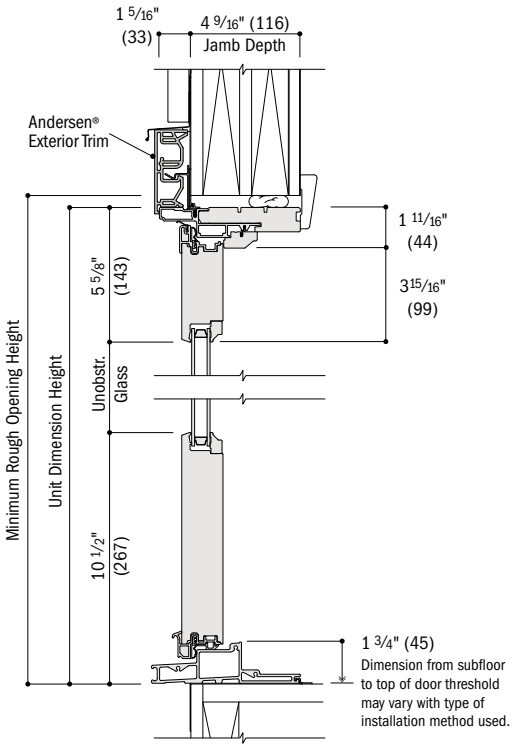

Vertical Section
Stationary, Traditional Panel

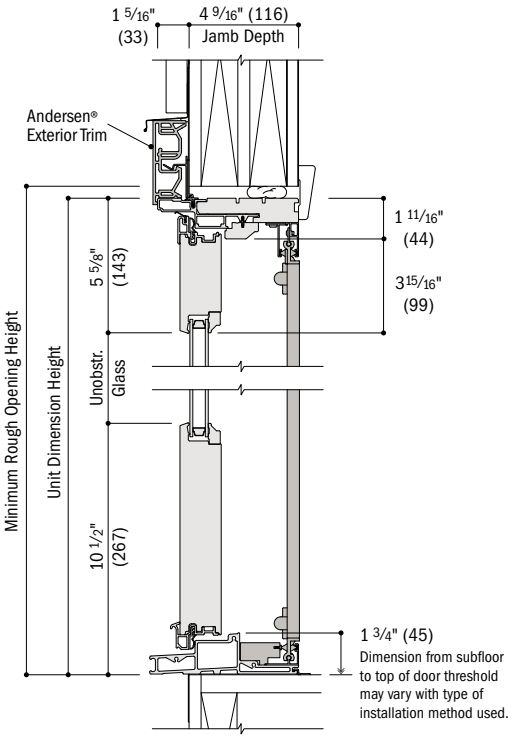

Vertical Section
Active, Traditional Panel, Retractable Insect Screen

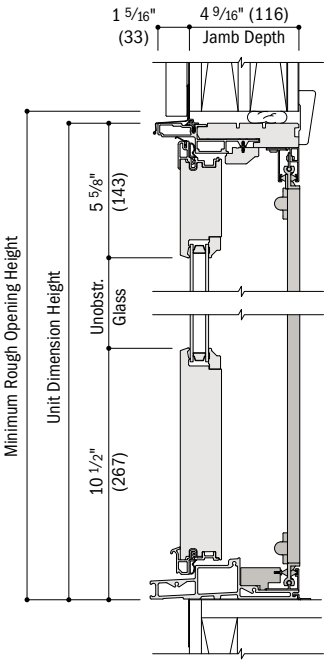

Vertical Section
Active, Traditional Panel, Retractable Insect Screen

For optional drop-nose channel and sill step details, see page 153.

See pages 168-171 for joining details.

Hinged Outswing Patio Door Details – Contemporary Panels

Scale 1 1/2" (38) = 1'-0" (305) – 1:8

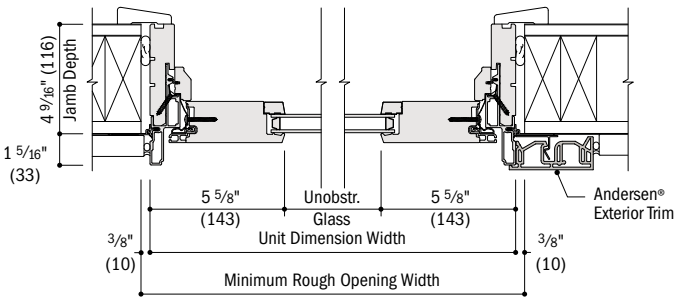

Horizontal Section
Stationary (**S**), Contemporary Panel

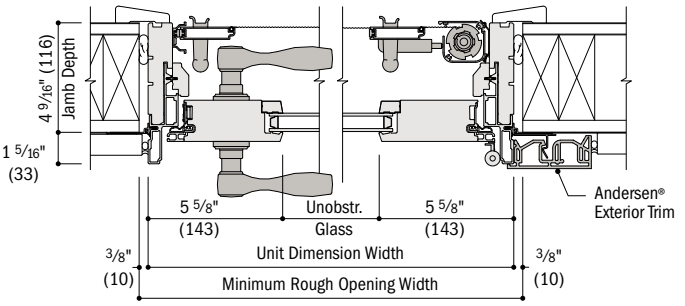

Horizontal Section
Active (**AR**/AL), Contemporary Panel, Retractable Insect Screen

continued on next page

- 4 9/16" (116) base jamb depth measurement is from back side of installation flange.
- Light-colored areas are parts included with door. Dark-colored areas are additional Andersen® parts required to complete door assembly as shown.
- Dimensions in parentheses are in millimeters.
- **Minimum rough openings may need to be increased to allow for use of building wraps, flashing, sill panning, brackets, fasteners or other items. See installation information on page 226-227.**
- Details are for illustration only and are not intended to represent product installation methods or materials. Refer to product installation instructions at andersenwindows.com.

Hinged Outswing Patio Door Details – Contemporary Panels *(continued)*

Scale 1 1/2" (38) = 1'-0" (305) – 1:8

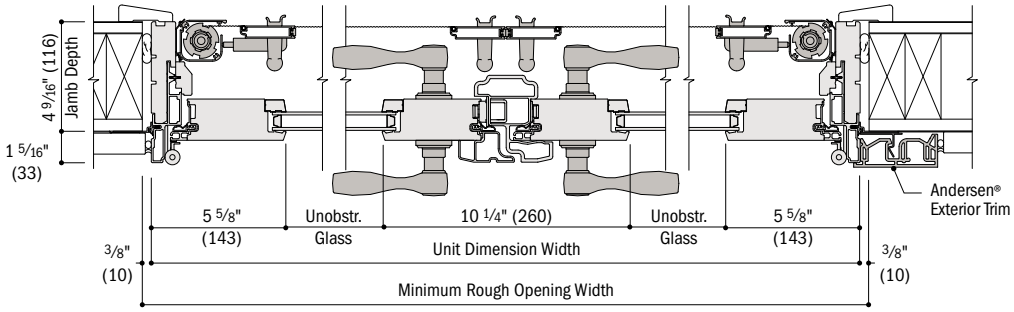

Horizontal Section

Two-Panel Active (**APLR**/PALR), Contemporary Panels, Retractable Insect Screen

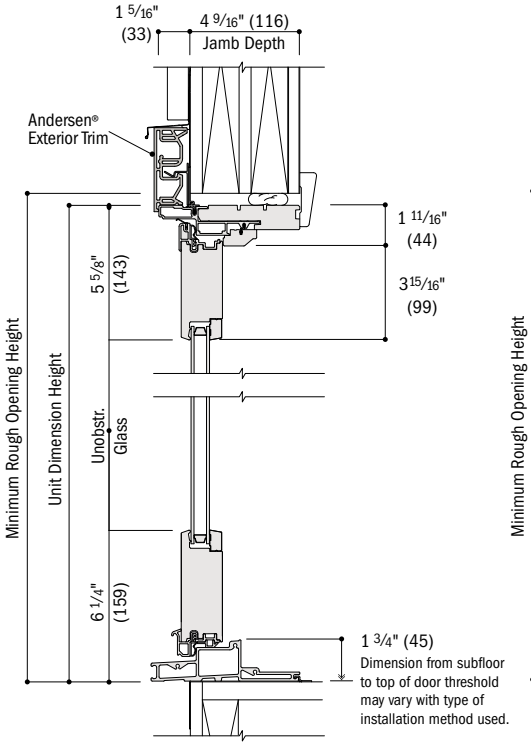

Vertical Section

Stationary, Contemporary Panel

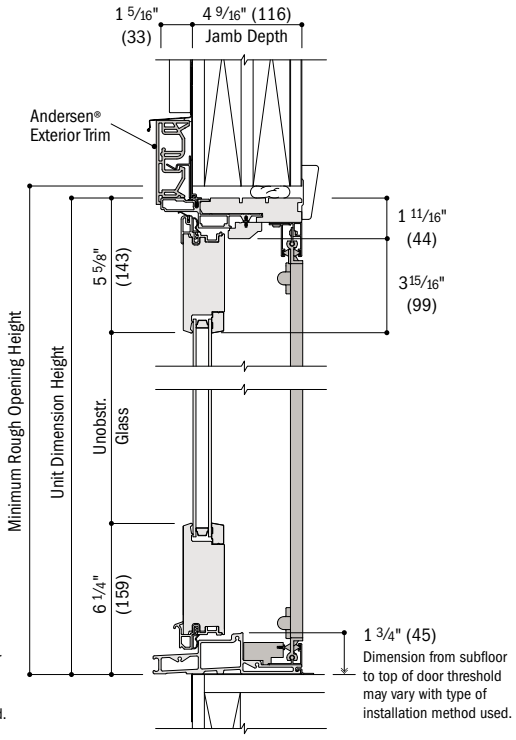

Vertical Section

Active, Contemporary Panel, Retractable Insect Screen

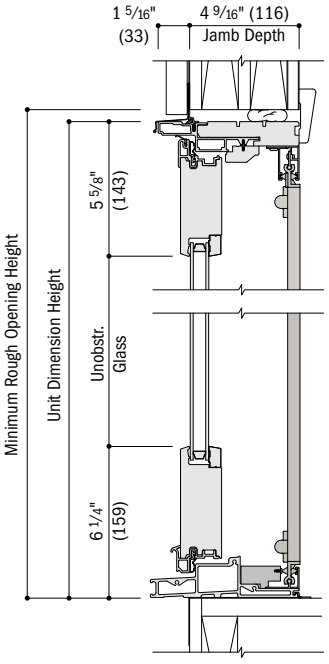

Vertical Section

Active, Contemporary Panel, Retractable Insect Screen

For optional drop-nose channel and sill step details, see page 153.

See pages 168-171 for joining details.

- 4 9/16" (116) base jamb depth measurement is from back side of installation flange.
- Light-colored areas are parts included with door. Dark-colored areas are additional Andersen® parts required to complete door assembly as shown.
- Dimensions in parentheses are in millimeters.
- **Minimum rough openings may need to be increased to allow for use of building wraps, flashing, sill panning, brackets, fasteners or other items. See installation information on page 226-227.**
- Details are for illustration only and are not intended to represent product installation methods or materials. Refer to product installation instructions at andersenwindows.com.

Table of Patio Door Transom and Sidelight Transom Sizes

Scale 1/8" (3) = 1'-0" (305) — 1:96

Notes on page 158 also apply to this page.

CUSTOM WIDTHS AVAILABLE — Vary based on transom style.

CUSTOM HEIGHTS — 11 1/4" to 27 1/4"

Transom Dimension	1'-2 1/4" (362)	1'-6 1/4" (464)	2'-0 1/8" (612)	2'-6 1/8" (765)	2'-8 1/8" (816)	3'-0 1/8" (918)	3'-2 1/8" (968)	3'-11 1/4" (1200)	4'-11 1/4" (1505)	5'-3 1/4" (1607)
Minimum Rough Opening	1'-3" (381)	1'-7" (483)	2'-1" (635)	2'-7" (787)	2'-9" (838)	3'-1" (940)	3'-3" (991)	4'-0" (1219)	5'-0" (1524)	5'-4" (1626)

Unobstructed Glass (single sash only)

Height	Unobstructed Glass	6 3/8" (163)	10 3/8" (264)	12 7/8" (327)	18 7/8" (479)	20 7/8" (530)	24 7/8" (632)	26 7/8" (683)	36" (915)	48" (1220)	52" (1322)
11 1/4" (286)	1'-0" (305) 3 3/8" (87)	**FWSLTD**-1-1310 **FWSTCD**-1-1310	**FWSLTD**-1-1710 **FWSTCD**-1-1710	**FWTD**-1-2110 **FWTCD**-1-2110	**FWTD**-1-2710 **FWTCD**-1-2710	**FWTD**-1-2910 **FWTCD**-1-2910	**FWTD**-1-3110 **FWTCD**-1-3110	**FWTD**-1-3310 **FWTCD**-1-3310	**FWTD**-1-4010 **FWTCD**-1-4010	**FWTD**-1-5010 **FWTCD**-1-5010	**FWTD**-1-5410 **FWTCD**-1-5410
11 1/4" (286)	1'-0" (305) 3 3/8" (87)								12 7/8" (327) **FWTD**-2-4010 **FWTCD**-2-4010	18 7/8" (479) **FWTD**-2-5010 **FWTCD**-2-5010	20 7/8" (530) **FWTD**-2-5410 **FWTCD**-2-5410
11 1/4" (286)	1'-0" (305) 7 5/8" (193)	10 5/8" (269) **FWSTDS**1310 **FWSTCDS**1310	14 5/8" (371) **FWSTDS**1710 **FWSTCDS**1710	20 7/16" (519) **FWTDS**2110 **FWTCDS**2110	26 7/16" (672) **FWTDS**2710 **FWTCDS**2710	28 7/16" (722) **FWTDS**2910 **FWTCDS**2910	32 7/16" (824) **FWTDS**3110 **FWTCDS**3110	34 7/16" (875) **FWTDS**3310 **FWTCDS**3310	43 5/8" (1107) **FWTDS**4010 **FWTCDS**4010	55 5/8" (1412) **FWTDS**5010 **FWTCDS**5010	59 5/8" (1514) **FWTDS**5410 **FWTCDS**5410
1'-3 1/4" (387)	1'-4" (406) 7 3/8" (188)	6 3/8" (163) **FWSLTD**-1-1314 **FWSTCD**-1-1314	10 3/8" (264) **FWSLTD**-1-1714 **FWSTCD**-1-1714	12 7/8" (327) **FWTD**-1-2114 **FWTCD**-1-2114	18 7/8" (479) **FWTD**-1-2714 **FWTCD**-1-2714	20 7/8" (530) **FWTD**-1-2914 **FWTCD**-1-2914	24 7/8" (632) **FWTD**-1-3114 **FWTCD**-1-3114	26 7/8" (683) **FWTD**-1-3314 **FWTCD**-1-3314	36" (915) **FWTD**-1-4014 **FWTCD**-1-4014	48" (1220) **FWTD**-1-5014 **FWTCD**-1-5014	52" (1322) **FWTD**-1-5414 **FWTCD**-1-5414
1'-3 1/4" (387)	1'-4" (406) 7 3/8" (188)								12 7/8" (327) **FWTD**-2-4014 **FWTCD**-2-4014	18 7/8" (479) **FWTD**-2-5014 **FWTCD**-2-5014	20 7/8" (530) **FWTD**-2-5414 **FWTCD**-2-5414
1'-3 1/4" (387)	1'-4" (406) 11 5/8" (294)	10 5/8" (269) **FWSTDS**1314 **FWSTCDS**1314	14 5/8" (371) **FWSTDS**1714 **FWSTCDS**1714	20 7/16" (519) **FWTDS**2114 **FWTCDS**2114	26 7/16" (672) **FWTDS**2714 **FWTCDS**2714	28 7/16" (722) **FWTDS**2914 **FWTCDS**2914	32 7/16" (824) **FWTDS**3114 **FWTCDS**3114	34 7/16" (875) **FWTDS**3314 **FWTCDS**3314	43 5/8" (1107) **FWTDS**4014 **FWTCDS**4014	55 5/8" (1412) **FWTDS**5014 **FWTCDS**5014	59 5/8" (1514) **FWTDS**5414 **FWTCDS**5414
1'-7 1/4" (489)	1'-8" (508) 11 3/8" (290)	6 3/8" (163) **FWSLTD**-1-1318 **FWSTCD**-1-1318	10 3/8" (264) **FWSLTD**-1-1718 **FWSTCD**-1-1718	12 7/8" (327) **FWTD**-1-2118 **FWTCD**-1-2118	18 7/8" (479) **FWTD**-1-2718 **FWTCD**-1-2718	20 7/8" (530) **FWTD**-1-2918 **FWTCD**-1-2918	24 7/8" (632) **FWTD**-1-3118 **FWTCD**-1-3118	26 7/8" (683) **FWTD**-1-3318 **FWTCD**-1-3318	36" (915) **FWTD**-1-4018 **FWTCD**-1-4018	48" (1220) **FWTD**-1-5018 **FWTCD**-1-5018	52" (1322) **FWTD**-1-5418 **FWTCD**-1-5418
1'-7 1/4" (489)	1'-8" (508) 11 3/8" (290)								12 7/8" (327) **FWTD**-2-4018 **FWTCD**-2-4018	18 7/8" (479) **FWTD**-2-5018 **FWTCD**-2-5018	20 7/8" (530) **FWTD**-2-5418 **FWTCD**-2-5418
1'-7 1/4" (489)	1'-8" (305) 15 5/8" (396)	10 5/8" (269) **FWSTDS**1318 **FWSTCDS**1318	14 5/8" (371) **FWSTDS**1718 **FWSTCDS**1718	20 7/16" (519) **FWTDS**2118 **FWTCDS**2118	26 7/16" (672) **FWTDS**2718 **FWTCDS**2718	28 7/16" (722) **FWTDS**2918 **FWTCDS**2918	32 7/16" (824) **FWTDS**3118 **FWTCDS**3118	34 7/16" (875) **FWTDS**3318 **FWTCDS**3318	43 5/8" (1107) **FWTDS**4018 **FWTCDS**4018	55 5/8" (1412) **FWTDS**5018 **FWTCDS**5018	59 5/8" (1514) **FWTDS**5418 **FWTCDS**5418
1'-11 1/4" (591)	2'-0" (610) 15 3/8" (391)	6 3/8" (163) **FWSLTD**-1-1320 **FWSTCD**-1-1320	10 3/8" (264) **FWSLTD**-1-1720 **FWSTCD**-1-1720	12 7/8" (327) **FWTD**-1-2120 **FWTCD**-1-2120	18 7/8" (479) **FWTD**-1-2720 **FWTCD**-1-2720	20 7/8" (530) **FWTD**-1-2920 **FWTCD**-1-2920	24 7/8" (632) **FWTD**-1-3120 **FWTCD**-1-3120	26 7/8" (683) **FWTD**-1-3320 **FWTCD**-1-3320	36" (915) **FWTD**-1-4020 **FWTCD**-1-4020	48" (1220) **FWTD**-1-5020 **FWTCD**-1-5020	52" (1322) **FWTD**-1-5420 **FWTCD**-1-5420

- "Transom Dimension" always refers to outside frame-to-frame dimension.
- "**Minimum Rough Opening**" **dimensions may need to be increased to allow for use of building wraps, flashing, sill panning, brackets, fasteners or other items. See pages 226-227 for more details.**
- Dimensions in parentheses are in millimeters.

Notes on page 158 also apply to this page.

5'-11 1/4" (1810)	6'-3 1/4" (1911)	6'-11 1/4" (2114)	7'-10 7/16" (2398)	7'-11 1/4" (2419)	8'-10 7/16" (2703)	9'-4 7/16" (2856)
6'-0" (1829)	6'-4" (1930)	7'-0" (2133)	7'-11" (2413)	8'-0" (2438)	8'-11" (2717)	9'-5" (2870)

60" (1525)	64" (1626)	72" (1830)	83 3/16" (2113)	84" (2134)	95 3/16" (2418)	101 3/16" (2570)
FWTD-1-6010 **FWTCD**-1-6010	**FWTD**-1-6410 **FWTCD**-1-6410	**FWTD**-1-7010 **FWTCD**-1-7010	**FWTD**-1-71110 **FWTCD**-1-71110	**FWTD**-1-8010 **FWTCD**-1-8010	**FWTD**-1-81110 **FWTCD**-1-81110	**FWTD**-1-9610 **FWTCD**-1-9610
24 7/8" (632)	26 7/8" (683)		20 7/8" (530)		24 7/8" (632)	26 7/8" (683)
FWTD-2-6010 **FWTCD**-2-6010	**FWTD**-2-6410 **FWTCD**-2-6410		**FWTD**-3-71110 **FWTCD**-3-71110		**FWTD**-3-81110 **FWTCD**-3-81110	**FWTD**-3-9610 **FWTCD**-3-9610
67 5/8" (1717)	71 5/8" (1818)	79 5/8" (2022)	90 3/4" (2305)	91 5/8" (2326)	102 3/4" (2610)	108 3/4" (2762)
FWTDS6010 **FWTCDS**6010	**FWTDS**6410 **FWTCDS**6410	**FWTDS**7010 **FWTCDS**7010	**FWTDS**71110 **FWTCDS**71110	**FWTDS**8010 **FWTCDS**8010	**FWTDS**81110 **FWTCDS**81110	**FWTCDS**9610 **FWTDS**9610

60" (1525)	64" (1626)	72" (1830)	83 3/16" (2113)	84" (2134)	95 3/16" (2418)	101 3/16" (2570)
FWTD-1-6014 **FWTCD**-1-6014	**FWTD**-1-6414 **FWTCD**-1-6414	**FWTD**-1-7014 **FWTCD**-1-7014	**FWTD**-1-71114 **FWTCD**-1-71114	**FWTD**-1-8014 **FWTCD**-1-8014	**FWTD**-1-81114 **FWTCD**-1-81114	**FWTD**-1-9614 **FWTCD**-1-9614
24 7/8" (632)	26 7/8" (683)		20 7/8" (530)		24 7/8" (632)	26 7/8" (683)
FWTD-2-6014 **FWTCD**-2-6014	**FWTD**-2-6414 **FWTCD**-2-6414		**FWTD**-3-71114 **FWTCD**-3-71114		**FWTD**-3-81114 **FWTCD**-3-81114	**FWTD**-3-9614 **FWTCD**-3-9614
67 5/8" (1717)	71 5/8" (1818)	79 5/8" (2022)	90 3/4" (2305)	91 5/8" (2326)	102 3/4" (2610)	108 3/4" (2762)
FWTDS6014 **FWTCDS**6014	**FWTDS**6414 **FWTCDS**6414	**FWTDS**7014 **FWTCDS**7014	**FWTDS**71114 **FWTCDS**71114	**FWTDS**8014 **FWTCDS**8014	**FWTDS**81114 **FWTCDS**81114	**FWTDS**9614 **FWTCDS**9614

60" (1525)	64" (1626)	72" (1830)	83 3/16" (2113)	84" (2134)	95 3/16" (2418)	101 3/16" (2570)
FWTD-1-6018 **FWTCD**-1-6018	**FWTD**-1-6418 **FWTCD**-1-6418	**FWTD**-1-7018 **FWTCD**-1-7018	**FWTD**-1-71118 **FWTCD**-1-71118	**FWTD**-1-8018 **FWTCD**-1-8018	**FWTD**-1-81118 **FWTCD**-1-81118	**FWTD**1-9618 **FWTCD**-1-9618
24 7/8" (632)	26 7/8" (683)		20 7/8" (530)		24 7/8" (632)	26 7/8" (683)
FWTD-2-6018 **FWTCD**-2-6018	**FWTD**-2-6418 **FWTCD**-2-6418		**FWTD**-3-71118 **FWTCD**-3-71118		**FWTD**-3-81118 **FWTCD**-3-81118	**FWTD**-3-9618 **FWTCD**-3-9618
67 5/8" (1717)	71 5/8" (1818)	79 5/8" (2022)	90 3/4" (2305)	91 5/8" (2326)	102 3/4" (2610)	108 3/4" (2762)
FWTDS6018 **FWTCDS**6018	**FWTDS**6418 **FWTCDS**6418	**FWTDS**7018 **FWTCDS**7018	**FWTDS**71118 **FWTCDS**71118	**FWTDS**8018 **FWTCDS**8018	**FWTDS**81118 **FWTCDS**81118	**FWTDS**9618 **FWTDS**9618

60" (1525)	64" (1626)	72" (1830)	83 3/16" (2113)	84" (2134)	95 3/16" (2418)	101 3/16" (2570)
FWTD-1-6020 **FWTCD**-1-6020	**FWTD**-1-6420 **FWTCD**-1-6420	**FWTD**-1-7020 **FWTCD**-1-7020	**FWTD**-1-71120 **FWTCD**-1-71120	**FWTD**-1-8020 **FWTCD**-1-8020	**FWTD**-1-81120 **FWTCD**-1-81120	**FWTD**-1-9620 **FWTCD**-1-9620

continued on next page

- "Transom Dimension" always refers to outside frame-to-frame dimension.
- "**Minimum Rough Opening**" **dimensions may need to be increased to allow for use of building wraps, flashing, sill panning, brackets, fasteners or other items. See pages 226-227 for more details.**
- Dimensions in parentheses are in millimeters.

Table of Patio Door Transom and Sidelight Transom Sizes *(continued)*

Scale 1/8" (3) = 1'-0" (305) — 1:96

Transom Dimension	1'-2 1/4" (362)	1'-6 1/4" (464)	2'-0 1/8" (612)	2'-6 1/8" (765)	2'-8 1/8" (816)	3'-0 1/8" (918)	3'-2 1/8" (968)	3'-11 1/4" (1200)	4'-11 1/4" (1505)	5'-3 1/4" (1607)
Minimum Rough Opening	1'-3" (381)	1'-7" (483)	2'-1" (635)	2'-7" (787)	2'-9" (838)	3'-1" (940)	3'-3" (991)	4'-0" (1219)	5'-0" (1524)	5'-4" (1626)

Unobstructed Glass (single sash only)

CUSTOM WIDTHS AVAILABLE — Vary based on transom style.

CUSTOM HEIGHTS — 11 1/4" to 27 1/4"

Unobstructed Glass	1'-2 1/4" (362)	1'-6 1/4" (464)	2'-0 1/8" (612)	2'-6 1/8" (765)	2'-8 1/8" (816)	3'-0 1/8" (918)	3'-2 1/8" (968)	3'-11 1/4" (1200)	4'-11 1/4" (1505)	5'-3 1/4" (1607)
1'-11 1/4" (591) × 2'-0" (610) × 15 3/8" (391)								12 7/8" (327) **FWTD**-2-4020 **FWTCD**-2-4020	18 7/8" (479) **FWTD**-2-5020 **FWTCD**-2-5020	20 7/8" (530) **FWTD**-2-5420 **FWTCD**-2-5420
1'-11 1/4" (591) × 2'-0" (610) × 19 5/8" (498)	10 5/8" (269) **FWSTDS**1320 **FWSTCDS**1320	14 5/8" (371) **FWSTDS**1720 **FWSTCDS**1720	20 7/16" (519) **FWTDS**2120 **FWTCDS**2120	26 7/16" (672) **FWTDS**2720 **FWTCDS**2720	28 7/16" (722) **FWTDS**2920 **FWTCDS**2920	32 7/16" (824) **FWTDS**3120 **FWTCDS**3120	34 7/16" (875) **FWTDS**3320 **FWTCDS**3320	43 5/8" (1107) **FWTDS**4020 **FWTCDS**4020	55 5/8" (1412) **FWTDS**5020 **FWTCDS**5020	59 5/8" (1514) **FWTDS**5420 **FWTCDS**5420
2'-3 1/4" (692) × 2'-4" (711) × 19 3/8" (493)	6 3/8" (163) **FWSLTD**-1-1324 **FWSTCD**-1-1324	10 3/8" (264) **FWSLTD**-1-1724 **FWSTCD**-1-1724	12 7/8" (327) **FWTD**-1-2124 **FWTCD**-1-2124	18 7/8" (479) **FWTD**-1-2724 **FWTCD**-1-2724	20 7/8" (530) **FWTD**-1-2924 **FWTCD**-1-2924	24 7/8" (632) **FWTD**-1-3124 **FWTCD**-1-3124	26 7/8" (683) **FWTD**-1-3324 **FWTCD**-1-3324	36" (915) **FWTD**-1-4024 **FWTCD**-1-4024	48" (1220) **FWTD**-1-5024 **FWTCD**-1-5024	52" (1322) **FWTD**-1-5424 **FWTCD**-1-5424
2'-3 1/4" (692) × 2'-4" (711) × 19 3/8" (493)								12 7/8" (327) **FWTD**-2-4024 **FWTCD**-2-4024	18 7/8" (479) **FWTD**-2-5024 **FWTCD**-2-5024	20 7/8" (530) **FWTD**-2-5424 **FWTCD**-2-5424
2'-3 1/4" (692) × 2'-4" (711) × 23 5/8" (599)	10 5/8" (269) **FWSTDS**1324 **FWSTCDS**1324	14 5/8" (371) **FWSTDS**1724 **FWSTCDS**1724	20 7/16" (519) **FWTDS**2124 **FWTCDS**2124	26 7/16" (672) **FWTDS**2724 **FWTCDS**2724	28 7/16" (722) **FWTDS**2924 **FWTCDS**2924	32 7/16" (824) **FWTDS**3124 **FWTCDS**3124	34 7/16" (875) **FWTDS**3324 **FWTCDS**3324	43 5/8" (1107) **FWTDS**4024 **FWTCDS**4024	55 5/8" (1412) **FWTDS**5024 **FWTCDS**5024	59 5/8" (1514) **FWTDS**5424 **FWTCDS**5424

Custom-size patio door transoms are available in 1/8" (3) increments. See pages 174-175 for custom sizes and specifications.

Transoms with either traditional or contemporary glass stops are available either direct-set or sash-set. Direct-set transoms provide maximum unobstructed glass. For venting transom windows, see page 160. For patio door sidelights, see page 161.

Grille patterns shown on page 164. Details shown on pages 164-167.

Direct-Set Patio Door Sidelight Transom
Traditional (**FWSTDS**)/Contemporary (**FWSTCDS**)

Sash-Set Patio Door Sidelight Transom
Traditional (**FWSLTD**)/Contemporary (**FWSTCD**)

Direct-Set Patio Door Transom
Traditional (**FWTDS**)/Contemporary (**FWTCDS**)

Sash-Set Patio Door Transoms
Traditional (**FWTD**-1, **FWTD**-2, **FWTD**-3)/Contemporary (**FWTCD**-1, **FWTCD**-2, **FWTCD**-3)

- "Transom Dimension" always refers to outside frame-to-frame dimension.
- "**Minimum Rough Opening**" **dimensions may need to be increased to allow for use of building wraps, flashing, sill panning, brackets, fasteners or other items. See pages 226-227 for more details.**
- Dimensions in parentheses are in millimeters.

Notes on the previous page also apply to this page.

5'-11 1/4" (1810)	6'-3 1/4" (1911)	6'-11 1/4" (2114)	7'-10 7/16" (2398)	7'-11 1/4" (2419)	8'-10 7/16" (2703)	9'-4 7/16" (2856)
6'-0" (1829)	6'-4" (1930)	7'-0" (2133)	7'-11" (2413)	8'-0" (2438)	8'-11" (2717)	9'-5" (2870)

24 7/8" (632)	26 7/8" (683)		20 7/8" (530)		24 7/8" (632)	26 7/8" (683)
FWTD-2-6020 **FWTCD**-2-6020	**FWTD**-2-6420 **FWTCD**-2-6420		**FWTD**-3-71120 **FWTCD**-3-71120		**FWTD**-3-81120 **FWTCD**-3-81120	**FWTD**-3-9620 **FWTCD**-3-9620
67 5/8" (1717)	71 5/8" (1818)	79 5/8" (2022)	90 3/4" (2305)	91 5/8" (2326)	102 3/4" (2610)	108 3/4" (2762)
FWTDS6020 **FWTCDS**6020	**FWTDS**6420 **FWTCDS**6420	**FWTDS**7020 **FWTCDS**7020	**FWTDS**71120 **FWTCDS**71120	**FWTDS**8020 **FWTCDS**8020	**FWTDS**81120 **FWTCDS**81120	**FWTDS**9620 **FWTCDS**9620

60" (1525)	64" (1626)	72" (1830)	83 3/16" (2113)	84" (2134)	95 3/16" (2418)	101 3/16" (2570)
FWTD-1-6024 **FWTCD**-1-6024	**FWTD**-1-6424 **FWTCD**-1-6424	**FWTD**-1-7024 **FWTCD**-1-7024	**FWTD**-1-71124 **FWTCD**-1-71124	**FWTD**-1-8024 **FWTCD**-1-8024	**FWTD**-1-81124 **FWTCD**-1-81124	**FWTD**-1-9624 **FWTCD**-1-9624
24 7/8" (632)	26 7/8" (683)		20 7/8" (530)		24 7/8" (632)	26 7/8" (683)
FWTD-2-6024 **FWTCD**-2-6024	**FWTD**-2-6424 **FWTCD**-2-6424		**FWTD**-3-71124 **FWTCD**-3-71124		**FWTD**-3-81124 **FWTCD**-3-81124	**FWTD**-3-9624 **FWTCD**-3-9624
67 5/8" (1717)	71 5/8" (1818)	79 5/8" (2022)	90 3/4" (2305)	91 5/8" (2326)	102 3/4" (2610)	108 3/4" (2762)
FWTDS6024 **FWTCDS**6024	**FWTDS**6424 **FWTCDS**6424	**FWTDS**7024 **FWTCDS**7024	**FWTDS**71124 **FWTCDS**71124	**FWTDS**8024 **FWTCDS**8024	**FWTDS**81124 **FWTCDS**81124	**FWTDS**9624 **FWTCDS**9624

- "Transom Dimension" always refers to outside frame-to-frame dimension.
- "**Minimum Rough Opening**" **dimensions may need to be increased to allow for use of building wraps, flashing, sill panning, brackets, fasteners or other items. See pages 226-227 for more details.**
- Dimensions in parentheses are in millimeters.

Table of Venting Transom Window Sizes

Scale 1/8" (3) = 1'-0" (305) — 1:96

Window Dimension	2'-0 1/8" (612)	2'-6 1/8" (765)	2'-8 1/8" (816)	3'-0 1/8" (918)	3'-2 1/8" (968)	3'-11 1/4" (1200)	4'-11 1/4" (1505)	5'-3 1/4" (1607)	5'-11 1/4" (1810)
Minimum Rough Opening	2'-1" (635)	2'-7" (787)	2'-9" (838)	3'-1" (940)	3'-3" (991)	4'-0" (1219)	5'-0" (1524)	5'-4" (1626)	6'-0" (1829)

Unobstructed Glass (single sash only)

CUSTOM SIZES AVAILABLE

1'-3 1/4" (387) / 1'-4" (406) / 8 5/8" (219)	17 5/8" (448) **ATV**2114	23 5/8" (600) **ATV**2714	25 5/8" (651) **ATV**2914	29 5/8" (752) **ATV**3114	31 5/8" (803) **ATV**3314	40 5/8" (1032) **ATV**4014	52 5/8" (1337) **ATV**5014	56 5/8" (1438) **ATV**5414	64 5/8" (1641) **ATV**6014
1'-7 1/4" (489) / 1'-8" (508) / 12 5/8" (321)	17 5/8" (448) **ATV**2118	23 5/8" (600) **ATV**2718	25 5/8" (651) **ATV**2918	29 5/8" (752) **ATV**3118	31 5/8" (803) **ATV**3318	40 5/8" (1032) **ATV**4018	52 5/8" (1337) **ATV**5018	56 5/8" (1438) **ATV**5418	64 5/8" (1641) **ATV**6018
1'-11 1/4" (591) / 2'-0" (610) / 16 5/8" (422)	17 5/8" (448) **ATV**2120	23 5/8" (600) **ATV**2720	25 5/8" (651) **ATV**2920	29 5/8" (752) **ATV**3120	31 5/8" (803) **ATV**3320	40 5/8" (1032) **ATV**4020	52 5/8" (1337) **ATV**5020	56 5/8" (1438) **ATV**5420	64 5/8" (1641) **ATV**6020
2'-3 1/4" (692) / 2'-4" (711) / 20 5/8" (524)	17 5/8" (448) **ATV**2124	23 5/8" (600) **ATV**2724	25 5/8" (651) **ATV**2924	29 5/8" (752) **ATV**3124	31 5/8" (803) **ATV**3324	40 5/8" (1032) **ATV**4024	52 5/8" (1337) **ATV**5024	56 5/8" (1438) **ATV**5424	64 5/8" (1641) **ATV**6024

Custom-size venting transoms are available in 1/8" (3) increments.

See page 69 for custom sizes and specifications.

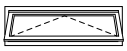

Venting Transom Window (**ATV**)

Venting transom windows have traditional glass stops and match patio doors with traditional panels.*

Grille patterns shown in the window section on page 58.

Details shown on page 166.

- "Window Dimension" always refers to outside frame-to-frame dimension.
- "**Minimum Rough Opening**" **dimensions may need to be increased to allow for use of building wraps, flashing, sill panning, brackets, fasteners or other items. See pages 226-227 for more details.**
- Dimensions in parentheses are in millimeters.
- Venting transom windows are not available with contemporary glass stops.

Table of Patio Door Sidelight Sizes

Scale 1/8" (3) = 1'-0" (305) – 1:96

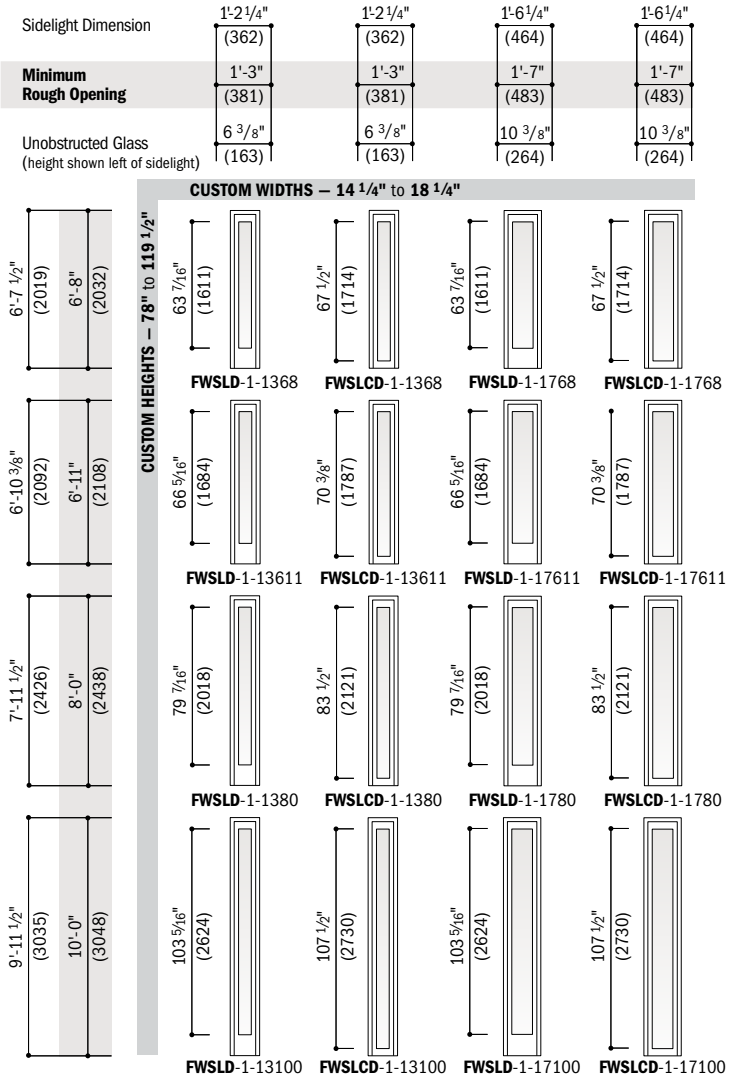

- "Sidelight Dimension" always refers to outside frame-to-frame dimension.
- "**Minimum Rough Opening**" **dimensions may need to be increased to allow for use of building wraps, flashing, sill panning, brackets, fasteners or other items. See pages 226-227 for more details.**
- Dimensions in parentheses are in millimeters.

Custom-size patio door sidelights are available in 1/8" (3) increments. See page 175 for custom sizes and specifications.

Choose traditional (**FWSLD**) or contemporary (**FWSLCD**) panel. For patio door transoms, see pages 156-160.

Grille patterns shown on page 164.
Details shown on pages 165 and 167.

Patio Door Sidelight Area Specifications

Sidelight Number	Traditional Panel Glass Area Sq. Ft./(m²)		Contemporary Panel Glass Area Sq. Ft./(m²)		Overall Door Area Sq. Ft./(m²)	
FWSLD/FWSLCD1368	2.82	(0.26)	3.00	(0.28)	7.87	(0.73)
FWSLD/FWSLCD13611	2.95	(0.27)	3.13	(0.29)	8.15	(0.76)
FWSLD/FWSLCD1380	3.53	(0.33)	3.71	(0.34)	9.45	(0.88)
FWSLD/FWSLCD13100	4.60	(0.43)	4.78	(0.44)	11.83	(1.10)
FWSLD/FWSLCD1768	4.58	(0.43)	4.88	(0.45)	10.08	(0.94)
FWSLD/FWSLCD17611	4.79	(0.44)	5.09	(0.47)	10.44	(0.97)
FWSLD/FWSLCD1780	5.74	(0.53)	6.03	(0.56)	12.10	(1.12)
FWSLD/FWSLCD17100	7.47	(0.69)	7.77	(0.72)	15.14	(1.41)

- Dimensions in parentheses are in square meters.

Direct-Set Patio Door Transom and Sidelight Transom Area Specifications

Transom Number	Glass Area Sq. Ft./(m²)		Overall Transom Area Sq. Ft./(m²)	
FWSTDS/FWSTCDS1310	0.56	(0.05)	1.11	(0.10)
FWSTDS/FWSTCDS1314	0.85	(0.08)	1.51	(0.14)
FWSTDS/FWSTCDS1318	1.15	(0.11)	1.90	(0.18)
FWSTDS/FWSTCDS1320	1.44	(0.13)	2.30	(0.21)
FWSTDS/FWSTCDS1324	1.74	(0.16)	2.70	(0.25)
FWSTDS/FWSTCDS1710	0.77	(0.07)	1.43	(0.13)
FWSTDS/FWSTCDS1714	1.18	(0.11)	1.93	(0.18)
FWSTDS/FWSTCDS1718	1.58	(0.15)	2.44	(0.23)
FWSTDS/FWSTCDS1720	1.99	(0.18)	2.95	(0.27)
FWSTDS/FWSTCDS1724	2.39	(0.22)	3.45	(0.32)
FWTDS/FWTCDS2110	1.08	(0.10)	1.88	(0.17)
FWTDS/FWTCDS2114	1.65	(0.15)	2.55	(0.24)
FWTDS/FWTCDS2118	2.21	(0.21)	3.22	(0.30)
FWTDS/FWTCDS2120	2.78	(0.26)	3.89	(0.36)
FWTDS/FWTCDS2124	3.35	(0.31)	4.56	(0.42)
FWTDS/FWTCDS2710	1.39	(0.13)	2.35	(0.22)
FWTDS/FWTCDS2714	2.13	(0.20)	3.19	(0.30)
FWTDS/FWTCDS2718	2.86	(0.27)	4.02	(0.37)
FWTDS/FWTCDS2720	3.60	(0.33)	4.86	(0.45)
FWTDS/FWTCDS2724	4.33	(0.40)	5.69	(0.53)
FWTDS/FWTCDS2910	1.50	(0.14)	2.51	(0.23)
FWTDS/FWTCDS2914	2.29	(0.21)	3.40	(0.32)
FWTDS/FWTCDS2918	3.08	(0.29)	4.29	(0.40)
FWTDS/FWTCDS2920	3.87	(0.36)	5.18	(0.48)
FWTDS/FWTCDS2924	4.66	(0.43)	6.07	(0.56)
FWTDS/FWTCDS3110	1.71	(0.16)	2.82	(0.26)
FWTDS/FWTCDS3114	2.61	(0.24)	3.82	(0.36)
FWTDS/FWTCDS3118	3.51	(0.33)	4.83	(0.45)
FWTDS/FWTCDS3120	4.41	(0.41)	5.83	(0.54)
FWTDS/FWTCDS3124	5.31	(0.49)	6.83	(0.63)
FWTDS/FWTCDS3310	1.82	(0.17)	2.98	(0.28)
FWTDS/FWTCDS3314	2.77	(0.26)	4.03	(0.37)
FWTDS/FWTCDS3318	3.73	(0.35)	5.09	(0.47)
FWTDS/FWTCDS3320	4.69	(0.44)	6.15	(0.57)
FWTDS/FWTCDS3324	5.64	(0.52)	7.21	(0.67)
FWTDS/FWTCDS4010	2.30	(0.21)	3.69	(0.34)
FWTDS/FWTCDS4014	3.51	(0.33)	5.00	(0.46)
FWTDS/FWTCDS4018	4.72	(0.44)	6.32	(0.59)
FWTDS/FWTCDS4020	5.93	(0.55)	7.63	(0.71)
FWTDS/FWTCDS4024	7.14	(0.66)	8.94	(0.83)
FWTDS/FWTCDS5010	2.93	(0.27)	4.63	(0.43)
FWTDS/FWTCDS5014	4.48	(0.42)	6.27	(0.58)
FWTDS/FWTCDS5018	6.02	(0.56)	7.92	(0.74)
FWTDS/FWTCDS5020	7.56	(0.70)	9.57	(0.89)
FWTDS/FWTCDS5024	9.11	(0.85)	11.21	(1.04)
FWTDS/FWTCDS5410	3.14	(0.29)	4.94	(0.46)
FWTDS/FWTCDS5414	4.80	(0.45)	6.70	(0.62)
FWTDS/FWTCDS5418	6.45	(0.60)	8.46	(0.79)
FWTDS/FWTCDS5420	8.11	(0.75)	10.21	(0.95)
FWTDS/FWTCDS5424	9.76	(0.91)	11.97	(1.11)
FWTDS/FWTCDS6010	3.56	(0.33)	5.57	(0.52)
FWTDS/FWTCDS6014	5.44	(0.51)	7.55	(0.70)
FWTDS/FWTCDS6018	7.32	(0.68)	9.52	(0.88)
FWTDS/FWTCDS6020	9.20	(0.85)	11.50	(1.07)
FWTDS/FWTCDS6024	11.08	(1.03)	13.48	(1.25)
FWTDS/FWTCDS6410	3.78	(0.35)	5.88	(0.55)
FWTDS/FWTCDS6414	5.76	(0.54)	7.97	(0.74)
FWTDS/FWTCDS6418	7.75	(0.72)	10.06	(0.93)
FWTDS/FWTCDS6420	9.74	(0.90)	12.15	(1.13)
FWTDS/FWTCDS6424	11.73	(1.09)	14.24	(1.32)

Transom Number	Glass Area Sq. Ft./(m²)		Overall Transom Area Sq. Ft./(m²)	
FWTDS/FWTCDS7010	4.20	(0.39)	6.50	(0.60)
FWTDS/FWTCDS7014	6.41	(0.60)	8.82	(0.82)
FWTDS/FWTCDS7018	8.62	(0.80)	11.13	(1.03)
FWTDS/FWTCDS7020	10.83	(1.01)	13.44	(1.25)
FWTDS/FWTCDS7024	13.04	(1.21)	15.75	(1.46)
FWTDS/FWTCDS71110	4.79	(0.44)	7.38	(0.69)
FWTDS/FWTCDS71114	7.31	(0.68)	10.00	(0.93)
FWTDS/FWTCDS71118	9.83	(0.91)	12.62	(1.17)
FWTDS/FWTCDS71120	12.35	(1.15)	15.24	(1.42)
FWTDS/FWTCDS71124	14.87	(1.38)	17.87	(1.66)
FWTDS/FWTCDS8010	4.83	(0.45)	7.44	(0.69)
FWTDS/FWTCDS8014	7.37	(0.68)	10.09	(0.94)
FWTDS/FWTCDS8018	9.92	(0.92)	12.73	(1.18)
FWTDS/FWTCDS8020	12.46	(1.16)	15.38	(1.43)
FWTDS/FWTCDS8024	15.01	(1.39)	18.02	(1.67)
FWTDS/FWTCDS81110	5.42	(0.50)	8.31	(0.77)
FWTDS/FWTCDS81114	8.27	(0.77)	11.27	(1.05)
FWTDS/FWTCDS81118	11.13	(1.03)	14.22	(1.32)
FWTDS/FWTCDS81120	13.98	(1.30)	17.18	(1.60)
FWTDS/FWTCDS81124	16.84	(1.56)	20.14	(1.87)
FWTDS/FWTCDS9610	5.74	(0.53)	8.78	(0.82)
FWTDS/FWTCDS9614	8.76	(0.81)	11.90	(1.11)
FWTDS/FWTCDS9618	11.78	(1.09)	15.03	(1.40)
FWTDS/FWTCDS9620	14.80	(1.37)	18.15	(1.69)
FWTDS/FWTCDS9624	17.82	(1.66)	21.27	(1.98)

• Dimensions in parentheses are in square meters.

Sash-Set Patio Door Transom and Sidelight Transom Area Specifications

Transom Number	Glass Area Sq. Ft./(m²)		Overall Transom Area Sq. Ft./(m²)	
FWSLTD/FWSTCD1310	0.15	(0.01)	1.11	(0.10)
FWSLTD/FWSTCD1314	0.33	(0.03)	1.51	(0.14)
FWSLTD/FWSTCD1318	0.51	(0.05)	1.90	(0.18)
FWSLTD/FWSTCD1320	0.69	(0.06)	2.30	(0.21)
FWSLTD/FWSTCD1324	0.86	(0.08)	2.70	(0.25)
FWSLTD/FWSTCD1710	0.25	(0.02)	1.43	(0.13)
FWSLTD/FWSTCD1714	0.54	(0.05)	1.93	(0.18)
FWSLTD/FWSTCD1718	0.82	(0.08)	2.44	(0.23)
FWSLTD/FWSTCD1720	1.11	(0.10)	2.95	(0.27)
FWSLTD/FWSTCD1724	1.40	(0.13)	3.45	(0.32)
FWTD/FWTCD-1-2110	0.30	(0.03)	1.88	(0.17)
FWTD/FWTCD-1-2114	0.66	(0.06)	2.55	(0.24)
FWTD/FWTCD-1-2118	1.02	(0.09)	3.22	(0.30)
FWTD/FWTCD-1-2120	1.38	(0.13)	3.89	(0.36)
FWTD/FWTCD-1-2124	1.73	(0.16)	4.56	(0.42)
FWTD/FWTCD-1-2710	0.45	(0.04)	2.35	(0.22)
FWTD/FWTCD-1-2714	0.97	(0.09)	3.19	(0.30)
FWTD/FWTCD-1-2718	1.49	(0.14)	4.02	(0.37)
FWTD/FWTCD-1-2720	2.02	(0.19)	4.86	(0.45)
FWTD/FWTCD-1-2724	2.54	(0.24)	5.69	(0.53)
FWTD/FWTCD-1-2910	0.49	(0.05)	2.51	(0.23)
FWTD/FWTCD-1-2914	1.07	(0.10)	3.40	(0.32)
FWTD/FWTCD-1-2918	1.65	(0.15)	4.29	(0.40)
FWTD/FWTCD-1-2920	2.23	(0.21)	5.18	(0.48)
FWTD/FWTCD-1-2924	2.81	(0.26)	6.07	(0.56)
FWTD/FWTCD-1-3110	0.59	(0.05)	2.82	(0.26)
FWTD/FWTCD-1-3114	1.28	(0.12)	3.82	(0.35)

Transom Number	Glass Area Sq. Ft./(m²)		Overall Transom Area Sq. Ft./(m²)	
FWTD/FWTCD-1-3118	1.97	(0.18)	4.83	(0.45)
FWTD/FWTCD-1-3120	2.66	(0.25)	5.83	(0.54)
FWTD/FWTCD-1-3124	3.35	(0.31)	6.83	(0.63)
FWTD/FWTCD-1-3310	0.64	(0.06)	2.98	(0.28)
FWTD/FWTCD-1-3314	1.38	(0.13)	4.03	(0.37)
FWTD/FWTCD-1-3318	2.13	(0.20)	5.09	(0.47)
FWTD/FWTCD-1-3320	2.88	(0.27)	6.15	(0.57)
FWTD/FWTCD-1-3324	3.62	(0.34)	7.21	(0.67)
FWTD/FWTCD-1-4010	0.85	(0.08)	3.69	(0.34)
FWTD/FWTCD-2-4010	0.61	(0.06)	3.69	(0.34)
FWTD/FWTCD-1-4014	1.85	(0.17)	5.00	(0.46)
FWTD/FWTCD-2-4014	1.32	(0.12)	5.00	(0.46)
FWTD/FWTCD-1-4018	2.85	(0.26)	6.32	(0.59)
FWTD/FWTCD-2-4018	2.04	(0.19)	6.32	(0.59)
FWTD/FWTCD-1-4020	3.85	(0.36)	7.63	(0.71)
FWTD/FWTCD-2-4020	2.75	(0.26)	7.63	(0.71)
FWTD/FWTCD-1-4024	4.86	(0.45)	8.94	(0.83)
FWTD/FWTCD-2-4024	3.47	(0.32)	8.94	(0.83)
FWTD/FWTCD-1-5010	1.14	(0.11)	4.63	(0.43)
FWTD/FWTCD-2-5010	0.89	(0.08)	4.63	(0.43)
FWTD/FWTCD-1-5014	2.47	(0.23)	6.27	(0.58)
FWTD/FWTCD-2-5014	1.94	(0.18)	6.27	(0.58)
FWTD/FWTCD-1-5018	3.80	(0.35)	7.92	(0.74)
FWTD/FWTCD-2-5018	2.99	(0.28)	7.92	(0.74)
FWTD/FWTCD-1-5020	5.14	(0.48)	9.57	(0.89)
FWTD/FWTCD-2-5020	4.04	(0.38)	9.57	(0.89)
FWTD/FWTCD-1-5024	6.47	(0.60)	11.21	(1.04)
FWTD/FWTCD-2-5024	5.09	(0.47)	11.21	(1.04)
FWTD/FWTCD-1-5410	1.23	(0.11)	4.94	(0.46)
FWTD/FWTCD-2-5410	0.99	(0.09)	4.94	(0.46)
FWTD/FWTCD-1-5414	2.68	(0.25)	6.70	(0.62)
FWTD/FWTCD-2-5414	2.15	(0.20)	6.70	(0.62)
FWTD/FWTCD-1-5418	4.12	(0.38)	8.46	(0.79)
FWTD/FWTCD-2-5418	3.31	(0.31)	8.46	(0.79)
FWTD/FWTCD-1-5420	5.57	(0.52)	10.21	(0.95)
FWTD/FWTCD-2-5420	4.47	(0.42)	10.21	(0.95)
FWTD/FWTCD-1-5424	7.01	(0.65)	11.97	(1.11)
FWTD/FWTCD-2-5424	5.63	(0.52)	11.97	(1.11)
FWTD/FWTCD-1-6010	1.42	(0.13)	5.57	(0.52)
FWTD/FWTCD-2-6010	1.18	(0.11)	5.57	(0.52)
FWTD/FWTCD-1-6014	3.09	(0.29)	7.55	(0.70)
FWTD/FWTCD-2-6014	2.56	(0.24)	7.55	(0.70)
FWTD/FWTCD-1-6018	4.75	(0.44)	9.52	(0.88)
FWTD/FWTCD-2-6018	3.94	(0.37)	9.52	(0.88)
FWTD/FWTCD-1-6020	6.42	(0.60)	11.50	(1.07)
FWTD/FWTCD-2-6020	5.32	(0.49)	11.50	(1.07)
FWTD/FWTCD-1-6024	8.09	(0.75)	13.48	(1.25)
FWTD/FWTCD-2-6024	6.70	(0.62)	13.48	(1.25)
FWTD/FWTCD-1-6410	1.51	(0.14)	5.88	(0.55)
FWTD/FWTCD-2-6410	1.27	(0.12)	5.88	(0.55)
FWTD/FWTCD-1-6414	3.29	(0.31)	7.97	(0.74)
FWTD/FWTCD-2-6414	2.76	(0.26)	7.97	(0.74)
FWTD/FWTCD-1-6418	5.07	(0.47)	10.06	(0.93)
FWTD/FWTCD-2-6418	4.26	(0.40)	10.06	(0.93)
FWTD/FWTCD-1-6420	6.85	(0.64)	12.15	(1.13)
FWTD/FWTCD-2-6420	5.75	(0.53)	12.15	(1.13)
FWTD/FWTCD-1-6424	8.63	(0.80)	14.24	(1.32)
FWTD/FWTCD-2-6424	7.24	(0.67)	14.24	(1.32)
FWTD/FWTCD-1-7010	1.70	(0.16)	6.50	(0.60)

• Dimensions in parentheses are in square meters.

continued

Sash-Set Patio Door Transom and Sidelight Transom Area Specifications *(continued)*

Transom Number	Glass Area Sq. Ft./(m²)		Overall Transom Area Sq. Ft./(m²)	
FWTD/FWTCD-1-7014	3.70	(0.34)	8.82	(0.82)
FWTD/FWTCD-1-7018	5.71	(0.53)	11.13	(1.03)
FWTD/FWTCD-1-7020	7.71	(0.72)	13.44	(1.25)
FWTD/FWTCD-1-7024	9.71	(0.90)	15.75	(1.46)
FWTD/FWTCD-1-71110	1.97	(0.18)	7.38	(0.69)
FWTD/FWTCD-3-71110	1.48	(0.14)	7.38	(0.69)
FWTD/FWTCD-1-71114	4.28	(0.40)	10.00	(0.93)
FWTD/FWTCD-3-71114	3.22	(0.30)	10.00	(0.93)
FWTD/FWTCD-1-71118	6.59	(0.61)	12.62	(1.17)
FWTD/FWTCD-3-71118	4.95	(0.46)	12.62	(1.17)
FWTD/FWTCD-1-71120	8.90	(0.83)	15.24	(1.42)
FWTD/FWTCD-3-71120	6.69	(0.62)	15.24	(1.42)
FWTD/FWTCD-1-71124	11.21	(1.04)	17.87	(1.66)
FWTD/FWTCD-3-71124	8.43	(0.78)	17.87	(1.66)
FWTD/FWTCD-1-8010	1.99	(0.18)	7.44	(0.69)
FWTD/FWTCD-1-8014	4.32	(0.40)	10.09	(0.94)
FWTD/FWTCD-1-8018	6.66	(0.62)	12.73	(1.18)
FWTD/FWTCD-1-8020	8.99	(0.84)	15.38	(1.43)
FWTD/FWTCD-1-8024	11.32	(1.05)	18.02	(1.67)
FWTD/FWTCD-1-81110	2.25	(0.21)	8.31	(0.77)
FWTD/FWTCD-3-81110	1.76	(0.16)	8.31	(0.77)
FWTD/FWTCD-1-81114	4.90	(0.46)	11.27	(1.05)
FWTD/FWTCD-3-81114	3.83	(0.36)	11.27	(1.05)
FWTD/FWTCD-1-81118	7.54	(0.70)	14.22	(1.32)
FWTD/FWTCD-3-81118	5.90	(0.55)	14.22	(1.32)
FWTD/FWTCD-1-81120	10.18	(0.95)	17.18	(1.60)
FWTD/FWTCD-3-81120	7.97	(0.74)	17.18	(1.60)
FWTD/FWTCD-1-81124	12.83	(1.19)	20.14	(1.87)
FWTD/FWTCD-3-81124	10.05	(0.93)	20.14	(1.87)
FWTD/FWTCD-1-9610	2.39	(0.22)	8.78	(0.82)
FWTD/FWTCD-3-9610	1.91	(0.18)	8.78	(0.82)
FWTD/FWTCD-1-9614	5.20	(0.48)	11.90	(1.11)
FWTD/FWTCD-3-9614	4.14	(0.38)	11.90	(1.11)
FWTD/FWTCD-1-9618	8.01	(0.74)	15.03	(1.40)
FWTD/FWTCD-3-9618	6.38	(0.59)	15.03	(1.40)
FWTD/FWTCD-1-9620	10.83	(1.01)	18.15	(1.69)
FWTD/FWTCD-3-9620	8.62	(0.80)	18.15	(1.69)
FWTD/FWTCD-1-9624	13.64	(1.27)	21.27	(1.98)
FWTD/FWTCD-3-9624	10.85	(1.01)	21.27	(1.98)

• Dimensions in parentheses are in square meters.

Venting Transom Window Opening and Area Specifications

Window Number	Clear Opening Sq. Ft./(m²)		Clear Opening in Full Open Position: Width Inches/(mm)		Clear Opening in Full Open Position: Depth Inches/(mm)		Glass Area Sq. Ft./(m²)		Vent Sq. Ft./(m²)		Top of Subfloor to Top of Inside Sill Stop Inches/(mm)		Overall Window Area Sq. Ft./(m²)	
ATV2114	0.79	(0.07)	19 3/16"	(487)	5 7/8"	(149)	1.04	(0.10)	0.79	(0.07)	69 1/2"	(1765)	2.56	(0.24)
ATV2714	1.03	(0.10)	25 3/16"	(640)	5 7/8"	(149)	1.40	(0.13)	1.03	(0.10)	69 1/2"	(1765)	3.19	(0.30)
ATV2914	1.11	(0.10)	27 3/16"	(691)	5 7/8"	(149)	1.52	(0.14)	1.11	(0.10)	69 1/2"	(1765)	3.40	(0.32)
ATV3114	1.28	(0.12)	31 3/16"	(792)	5 7/8"	(149)	1.76	(0.16)	1.28	(0.12)	69 1/2"	(1765)	3.83	(0.36)
ATV3314	1.36	(0.13)	33 3/16"	(843)	5 7/8"	(149)	1.88	(0.17)	1.36	(0.13)	69 1/2"	(1765)	4.04	(0.38)
ATV4014	1.73	(0.16)	42 5/16"	(1075)	5 7/8"	(149)	2.43	(0.23)	1.73	(0.16)	69 1/2"	(1765)	5.00	(0.46)
ATV5014	2.22	(0.21)	54 5/16"	(1380)	5 7/8"	(149)	3.14	(0.29)	2.22	(0.21)	69 1/2"	(1765)	6.28	(0.58)
ATV5414	2.39	(0.22)	58 5/16"	(1481)	5 7/8"	(149)	3.38	(0.31)	2.39	(0.22)	69 1/2"	(1765)	6.70	(0.62)
ATV6014	2.71	(0.25)	66 5/16"	(1684)	5 7/8"	(149)	3.86	(0.36)	2.71	(0.25)	69 1/2"	(1765)	7.55	(0.70)
ATV2118	0.79	(0.07)	19 3/16"	(487)	5 7/8"	(149)	1.53	(0.14)	0.79	(0.07)	65 1/2"	(1664)	3.23	(0.30)
ATV2718	1.03	(0.10)	25 3/16"	(640)	5 7/8"	(149)	2.05	(0.19)	1.03	(0.10)	65 1/2"	(1664)	4.03	(0.37)
ATV2918	1.11	(0.10)	27 3/16"	(691)	5 7/8"	(149)	2.23	(0.21)	1.11	(0.10)	65 1/2"	(1664)	4.29	(0.40)
ATV3118	1.28	(0.12)	31 3/16"	(792)	5 7/8"	(149)	2.58	(0.24)	1.28	(0.12)	65 1/2"	(1664)	4.83	(0.45)
ATV3318	1.36	(0.13)	33 3/16"	(843)	5 7/8"	(149)	2.75	(0.26)	1.36	(0.13)	65 1/2"	(1664)	5.10	(0.47)
ATV4018	1.73	(0.16)	42 5/16"	(1075)	5 7/8"	(149)	3.55	(0.33)	1.73	(0.16)	65 1/2"	(1664)	6.32	(0.59)
ATV5018	2.22	(0.21)	54 5/16"	(1380)	5 7/8"	(149)	4.60	(0.43)	2.22	(0.21)	65 1/2"	(1664)	7.92	(0.74)
ATV5418	2.39	(0.22)	58 5/16"	(1481)	5 7/8"	(149)	4.95	(0.46)	2.39	(0.22)	65 1/2"	(1664)	8.46	(0.79)
ATV6018	2.71	(0.25)	66 5/16"	(1684)	5 7/8"	(149)	5.65	(0.52)	2.71	(0.25)	65 1/2"	(1664)	9.53	(0.89)
ATV2120	0.79	(0.07)	19 3/16"	(487)	5 7/8"	(149)	2.01	(0.19)	0.79	(0.07)	61 1/2"	(1562)	3.90	(0.36)
ATV2720	1.03	(0.10)	25 3/16"	(640)	5 7/8"	(149)	2.71	(0.25)	1.03	(0.10)	61 1/2"	(1562)	4.86	(0.45)
ATV2920	1.11	(0.10)	27 3/16"	(691)	5 7/8"	(149)	2.94	(0.27)	1.11	(0.10)	61 1/2"	(1562)	5.19	(0.48)
ATV3120	1.28	(0.12)	31 3/16"	(792)	5 7/8"	(149)	3.40	(0.32)	1.28	(0.12)	61 1/2"	(1562)	5.83	(0.54)
ATV3320	1.36	(0.13)	33 3/16"	(843)	5 7/8"	(149)	3.63	(0.34)	1.36	(0.13)	61 1/2"	(1562)	6.16	(0.57)
ATV4020	1.73	(0.16)	42 5/16"	(1075)	5 7/8"	(149)	4.68	(0.44)	1.73	(0.16)	61 1/2"	(1562)	7.63	(0.71)
ATV5020	2.22	(0.21)	54 5/16"	(1380)	5 7/8"	(149)	6.06	(0.56)	2.22	(0.21)	61 1/2"	(1562)	9.57	(0.89)
ATV5420	2.39	(0.22)	58 5/16"	(1481)	5 7/8"	(149)	6.53	(0.61)	2.39	(0.22)	61 1/2"	(1562)	10.21	(0.95)
ATV6020	2.71	(0.25)	66 5/16"	(1684)	5 7/8"	(149)	7.45	(0.69)	2.71	(0.25)	61 1/2"	(1562)	1.07	(0.10)
ATV2124	0.79	(0.07)	19 3/16"	(487)	5 7/8"	(149)	2.50	(0.23)	0.79	(0.07)	57 1/2"	(1461)	4.57	(0.42)
ATV2724	1.03	(0.10)	25 3/16"	(640)	5 7/8"	(149)	3.36	(0.31)	1.03	(0.10)	57 1/2"	(1461)	5.70	(0.53)
ATV2924	1.11	(0.10)	27 3/16"	(691)	5 7/8"	(149)	3.64	(0.34)	1.11	(0.10)	57 1/2"	(1461)	6.08	(0.56)
ATV3124	1.28	(0.12)	31 3/16"	(792)	5 7/8"	(149)	4.22	(0.39)	1.28	(0.12)	57 1/2"	(1461)	6.84	(0.64)
ATV3324	1.36	(0.13)	33 3/16"	(843)	5 7/8"	(149)	4.50	(0.42)	1.36	(0.13)	57 1/2"	(1461)	7.23	(0.67)
ATV4024	1.73	(0.16)	42 5/16"	(1075)	5 7/8"	(149)	5.81	(0.54)	1.73	(0.16)	57 1/2"	(1461)	8.94	(0.83)
ATV5024	2.22	(0.21)	54 5/16"	(1380)	5 7/8"	(149)	7.53	(0.70)	2.22	(0.21)	57 1/2"	(1461)	11.21	(1.04)
ATV5424	2.39	(0.22)	58 5/16"	(1481)	5 7/8"	(149)	8.10	(0.75)	2.39	(0.22)	57 1/2"	(1461)	11.97	(1.11)
ATV6024	2.71	(0.25)	66 5/16"	(1684)	5 7/8"	(149)	9.24	(0.86)	2.71	(0.25)	57 1/2"	(1461)	13.49	(1.25)

• "Top of Subfloor to Top of Inside Sill Stop" is calculated based upon a structural header height of 6'-10 1/2" (2096).
• Dimensions in parentheses are in millimeters or square meters.

Grille Patterns

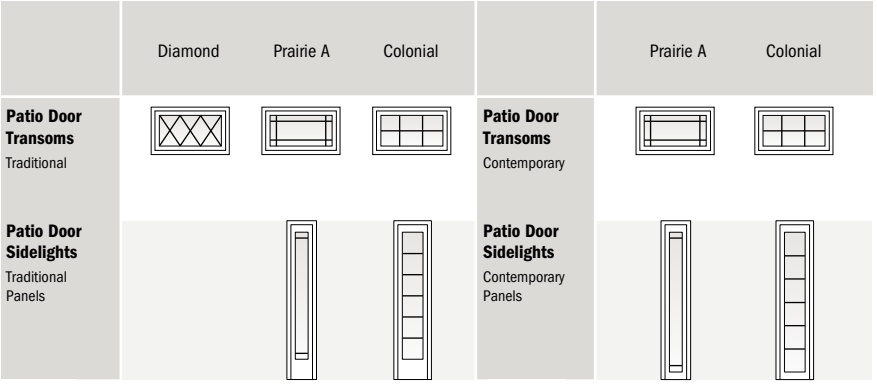

Number of lights and overall pattern varies with transom or sidelight size. Patterns may not be available in all configuration or sizes. Specified equal light patterns are also available. Custom patterns are only available for sidelights with traditional panels. For venting transom window grille patterns, see page 58. For more grille options, see page 19 or visit **andersenwindows.com/grilles**.

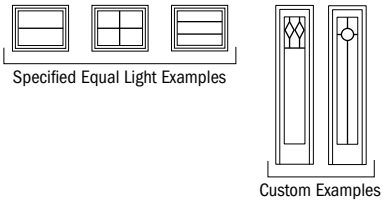

Direct-Set Patio Door Transom and Sidelight Transom Details – Traditional

Scale 1 1/2" (38) = 1'-0" (305) — 1:8

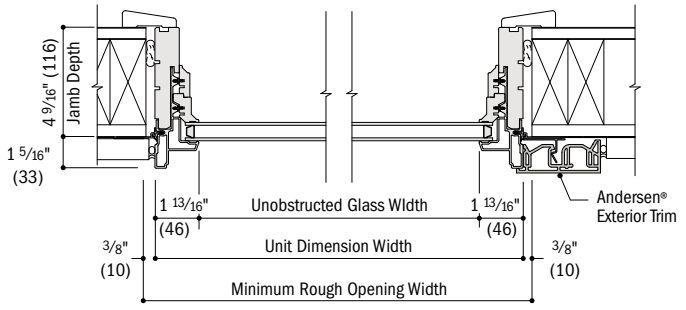

Horizontal Section
Transom and Sidelight Transom, Traditional

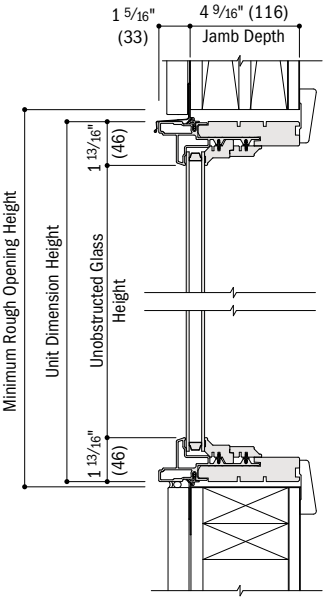

Vertical Section
Transom and Sidelight Transom, Traditional

- 4 9/16" (116) jamb depth measurement is from back side of installation flange.
- Light-colored areas are parts included with sidelights and/or transoms. Dark-colored areas are additional Andersen® parts required to complete assembly as shown.
- Dimensions in parentheses are in millimeters.
- **Minimum rough openings may need to be increased to allow for use of building wraps, flashing, sill panning, brackets, fasteners or other items. See installation information on pages 226-227.**
- Details are for illustration only and are not intended to represent product installation methods or materials. Refer to product installation instructions at andersenwindows.com.

Sash-Set Patio Door Transom, Sidelight Transom and Sidelight Details – Traditional

Scale 1 1/2" (38) = 1'-0" (305) – 1:8

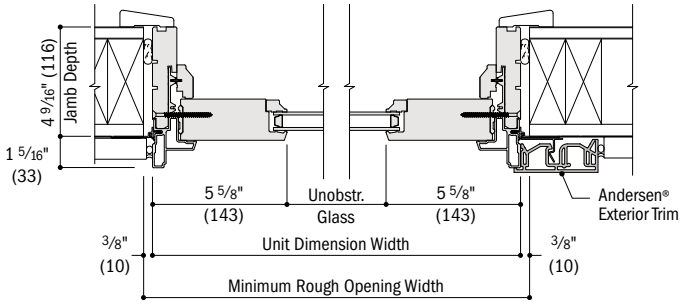

Horizontal Section
Transom, Traditional

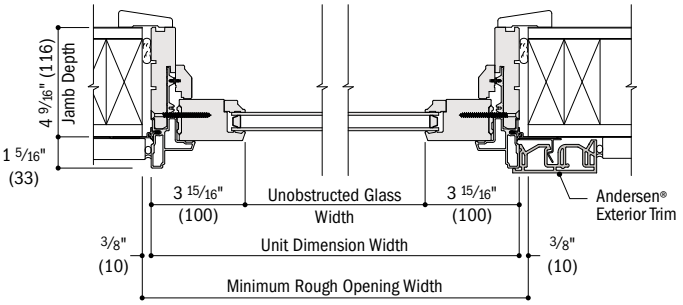

Horizontal Section
Sidelight Transom and Sidelight, Traditional

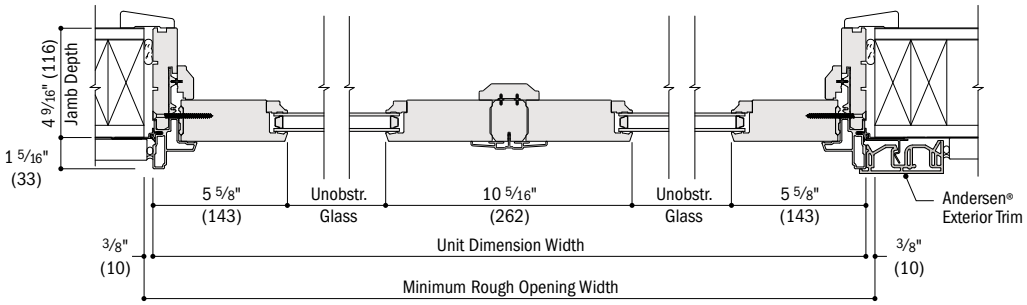

Horizontal Section
Twin Transom, Traditional

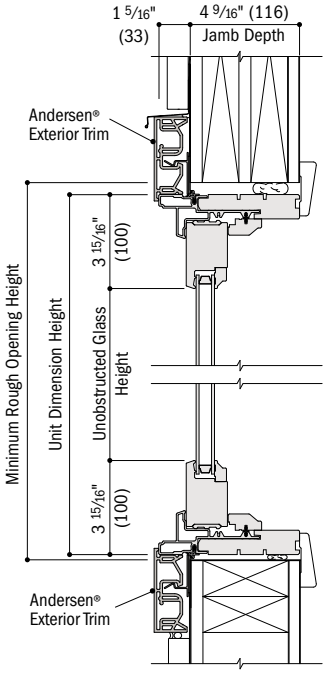

Vertical Section
Transom and Sidelight Transom, Traditional

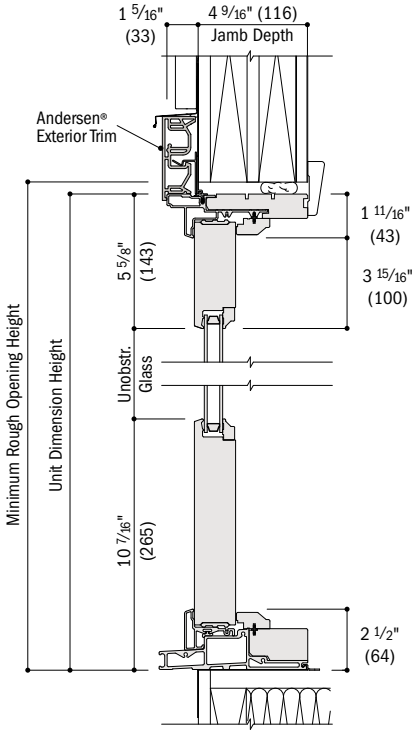

Vertical Section
Sidelight, Traditional

See pages 168-171 for joining details.

- 4 9/16" (116) jamb depth measurement is from back side of installation flange.
- Light-colored areas are parts included with sidelights and/or transoms. Dark-colored areas are additional Andersen® parts required to complete assembly as shown.
- Dimensions in parentheses are in millimeters.
- **Minimum rough openings may need to be increased to allow for use of building wraps, flashing, sill panning, brackets, fasteners or other items. See installation information on pages 226-227.**
- Details are for illustration only and are not intended to represent product installation methods or materials. Refer to product installation instructions at andersenwindows.com.

Venting Transom Window Details – Traditional

Scale 1 1/2" (38) = 1'-0" (305) — 1:8

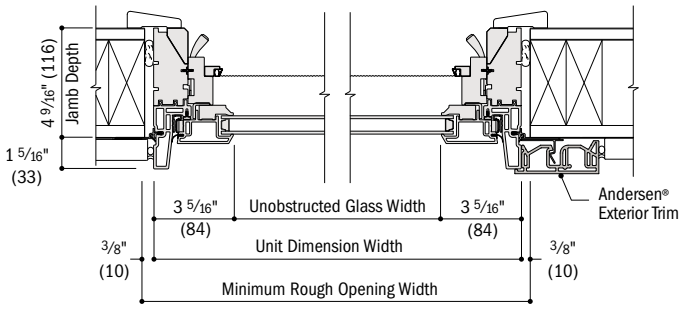

Horizontal Section
Venting Transom Window, Traditional

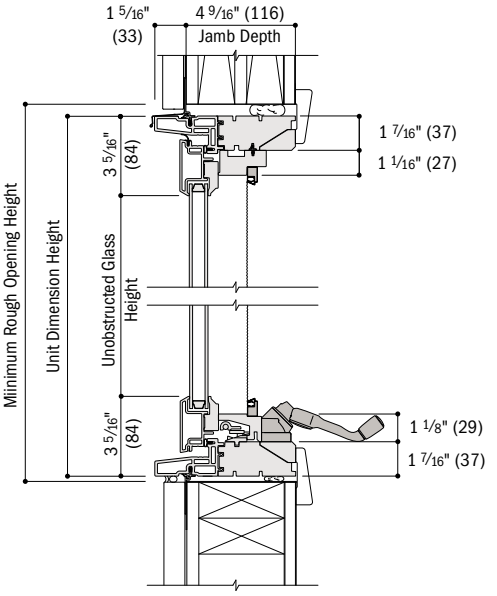

Vertical Section
Venting Transom Window, Traditional

Direct-Set Patio Door Transom and Sidelight Transom Details – Contemporary

Scale 1 1/2" (38) = 1'-0" (305) — 1:8

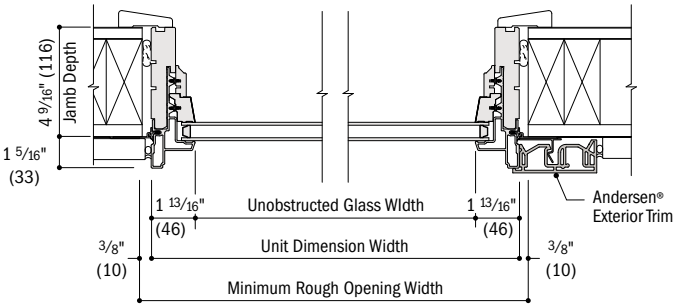

Horizontal Section
Transom and Sidelight Transom, Contemporary

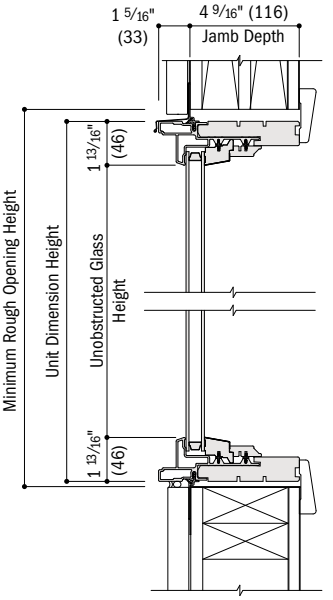

Vertical Section
Transom and Sidelight Transoms

- 4 9/16" (116) jamb depth measurement is from back side of installation flange.
- Light-colored areas are parts included with sidelights and/or transoms. Dark-colored areas are additional Andersen® parts required to complete assembly as shown.
- Dimensions in parentheses are in millimeters.
- **Minimum rough openings may need to be increased to allow for use of building wraps, flashing, sill panning, brackets, fasteners or other items. See installation information on pages 226-227.**
- Details are for illustration only and are not intended to represent product installation methods or materials. Refer to product installation instructions at andersenwindows.com.

Sash-Set Patio Door Transom, Sidelight Transom and Sidelight Details – Contemporary

Scale 1 1/2" (38) = 1'-0" (305) – 1:8

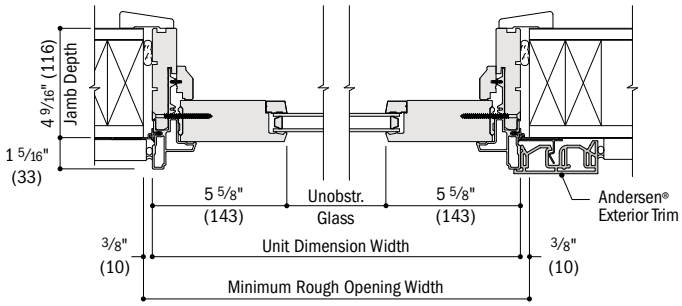

Horizontal Section
Transom, Contemporary

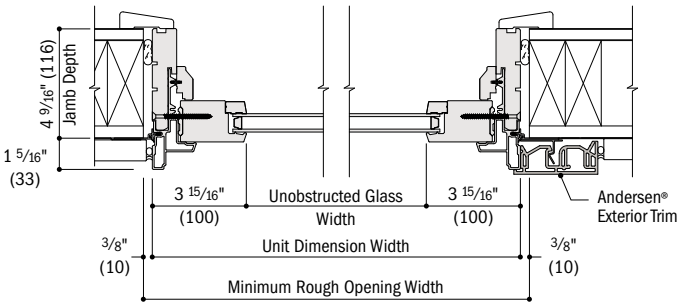

Horizontal Section
Transom and Sidelight Transom, Contemporary

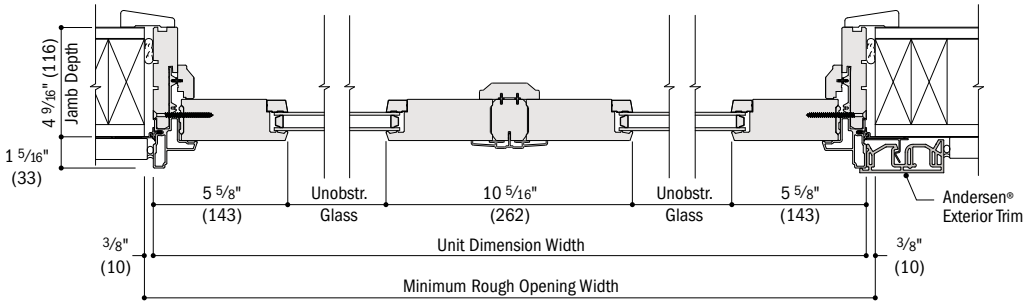

Horizontal Section
Twin Transom, Contemporary

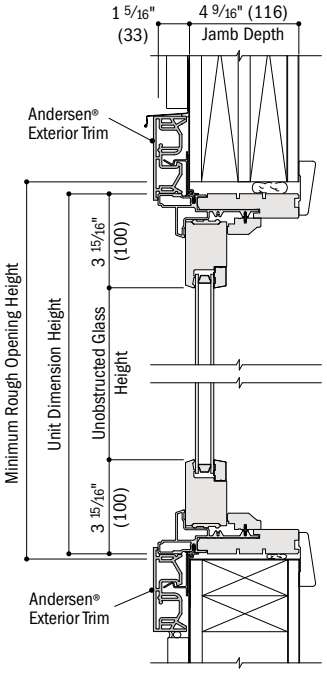

Vertical Section
Transom and Sidelight Transom, Contemporary

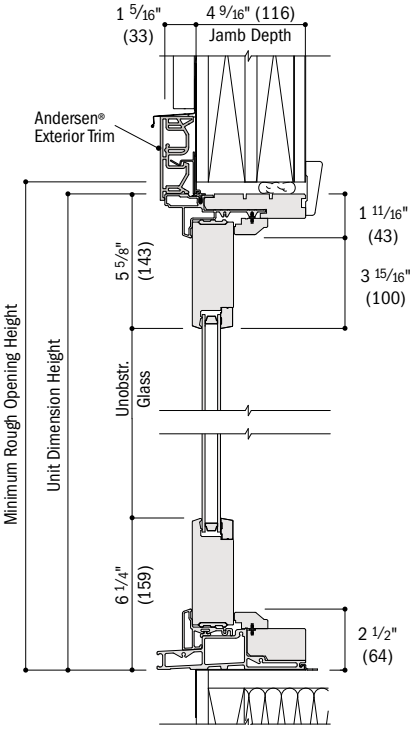

Vertical Section
Sidelight, Contemporary

See pages 168-171 for joining details.

- 4 9/16" (116) jamb depth measurement is from back side of installation flange.
- Light-colored areas are parts included with sidelights and/or transoms. Dark-colored areas are additional Andersen® parts required to complete assembly as shown.
- Dimensions in parentheses are in millimeters.
- **Minimum rough openings may need to be increased to allow for use of building wraps, flashing, sill panning, brackets, fasteners or other items. See installation information on pages 226-227.**
- Details are for illustration only and are not intended to represent product installation methods or materials. Refer to product installation instructions at andersenwindows.com.

Vertical (ribbon) Easy Connect Fiberglass Joining Details

Scale 1 1/2" (38) = 1'-0" (305) — 1:8

Patio doors, sidelights and transoms can be joined using 3/4" (19) x 5 3/4" (146) fiberglass joining material for 4 9/16" (116) base jamb depths. 3/4" (19) x 7 3/4" (197) fiberglass joining material is used for higher performance and is required for hinged inswing patio doors with 6 9/16" (167) base jamb depths.

Products with traditional option shown. Details also apply to products with contemporary option. **Do not join inswing or outswing doors hinge jamb to hinge jamb.**

Hinged Inswing Patio Doors

Overall Door-Door or Door-Sidelight Dimension Width – Sum of individual door-door or door-sidelight widths plus 3/4" (19) per join.

Overall Minimum Rough Opening Width – Overall dimension width plus 3/4" (19).

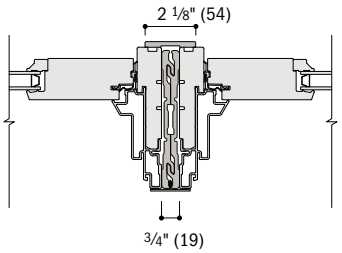

Stationary Jamb to Stationary Jamb
4 9/16" (116) Base Jamb Depth

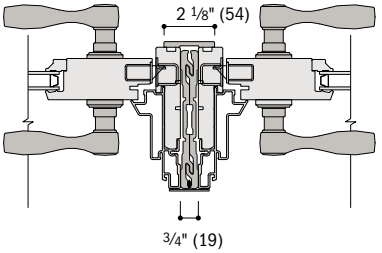

Latch Jamb to Latch Jamb
4 9/16" (116) Base Jamb Depth

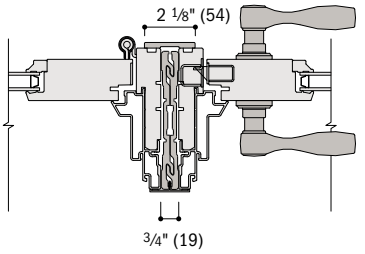

Hinge Jamb to Latch Jamb
4 9/16" (116) Base Jamb Depth

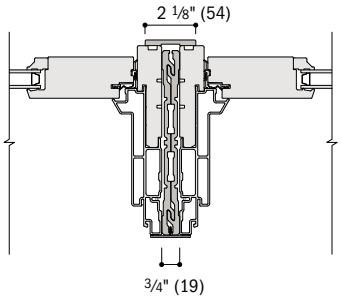

Stationary Jamb to Stationary Jamb
6 9/16" (167) Base Jamb Depth

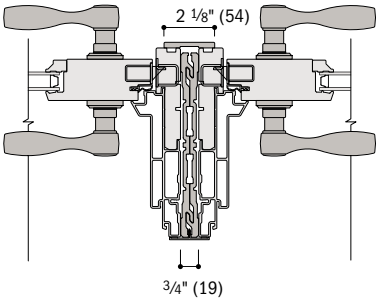

Latch Jamb to Latch Jamb
6 9/16" (167) Base Jamb Depth

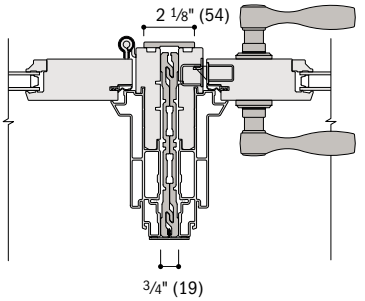

Hinge Jamb to Latch Jamb
6 9/16" (167) Base Jamb Depth

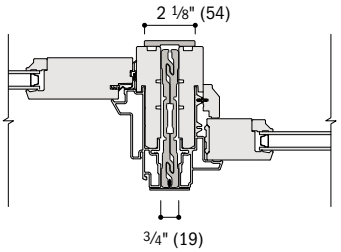

Stationary Jamb to Sidelight
4 9/16" (116) Base Jamb Depth

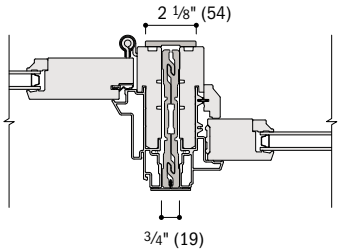

Hinge Jamb to Sidelight
4 9/16" (116) Base Jamb Depth

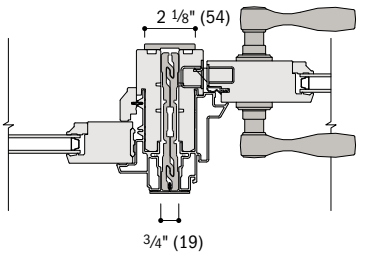

Sidelight to Latch Jamb
4 9/16" (116) Base Jamb Depth

Hinged Outswing Patio Doors

Overall Door-Door or Door-Sidelight Dimension Width – Sum of individual door-door or door-sidelight widths plus 3/4" (19) per join.

Overall Minimum Rough Opening Width – Overall dimension width plus 3/4" (19).

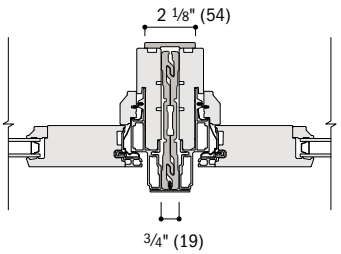

Stationary Door to Stationary Door

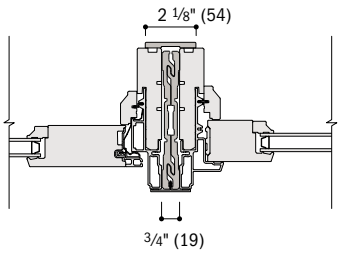

Stationary Door to Sidelight

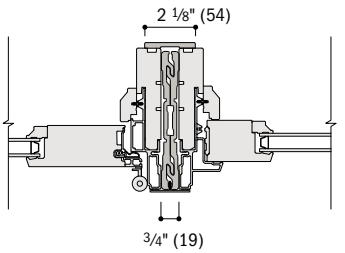

Hinge Jamb to Sidelight

- Light-colored areas are parts included with patio doors, sidelights and/or transoms. Dark-colored areas are additional Andersen® parts required to complete assembly as shown.
- Dimensions in parentheses are in millimeters.
- **Minimum rough openings may need to be increased to allow for use of building wraps, flashing, sill panning, brackets, fasteners or other items. See installation information on pages 226-227.**
- Details are for illustration only and are not intended to represent product installation methods or materials. Refer to product installation instructions at andersenwindows.com.
- Structural performance of any combination is only as high as the lowest structural performance of any individual product or join in the combination.

Vertical (ribbon) Easy Connect Fiberglass Joining Details

Scale 1 1/2" (38) = 1'-0" (305) – 1:8

Gliding Patio Doors

Overall Door-Door or Door-Sidelight Dimension Width – Sum of individual door-door or door-sidelight widths plus 3/4" (19) per join.

Overall Minimum Rough Opening Width – Overall dimension width plus 3/4" (19).

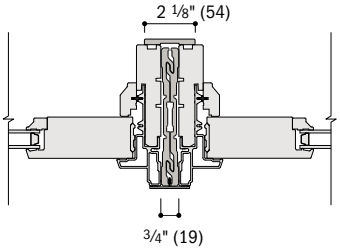

Stationary Door to Stationary Door

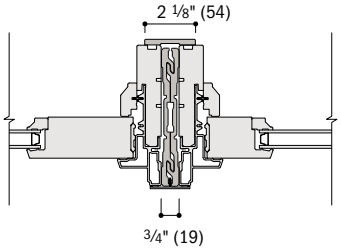

Stationary Door to Sidelight

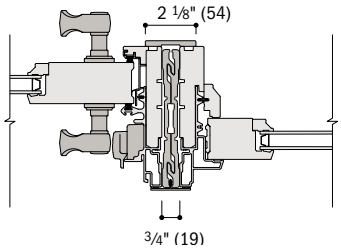

Operating Jamb to Sidelight

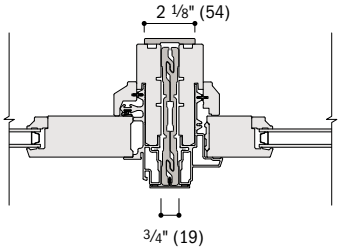

Stationary Jamb to Sidelight

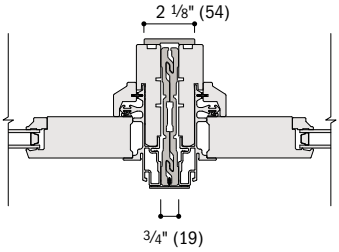

Stationary Jamb to Stationary Jamb

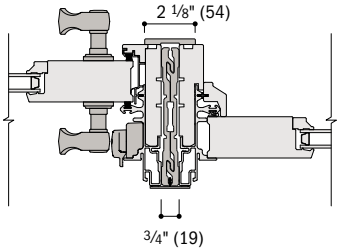

Operating Jamb to Stationary Jamb

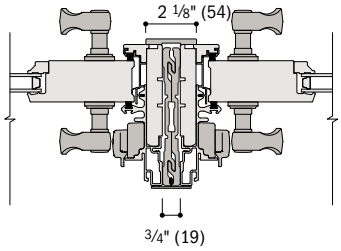

Operating Jamb to Operating Jamb

Patio Door Transoms and Sidelight Transoms

Overall "Transom-Transom" or "Transom-Sidelight Transom" Dimension Width – Sum of individual "transom-transom" or "transom-sidelight transom" widths plus 3/4" (19) per join.

Overall Minimum Rough Opening Width – Overall dimension width plus 3/4" (19).

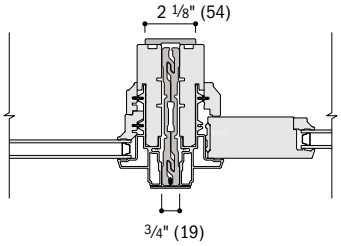

Direct-Set Sidelight Transom to Sash-Set Transom

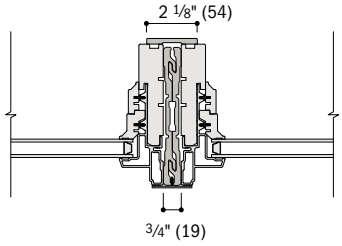

Direct-Set Transom to Direct-Set Transom

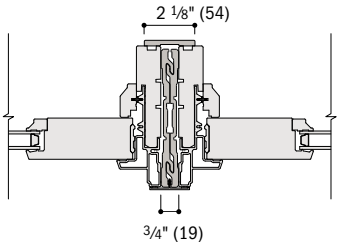

Sash-Set Transom to Sash-Set Transom

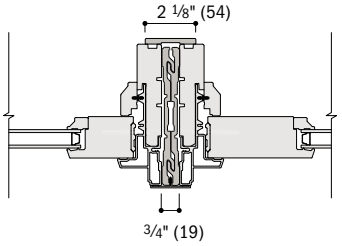

Sash-Set Sidelight Transom to Sash-Set Transom

Venting Transom Windows

Overall "Venting Transom Window"-"Venting Transom Window" Dimension Width – Sum of individual "venting transom window"-"venting transom window" widths plus 3/4" (19) per join.

Overall Minimum Rough Opening Width – Overall dimension width plus 3/4" (19).

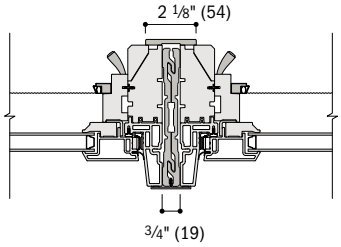

Venting Transom Window* to Venting Transom Window

For more information on joining, refer to the combination designs section starting on page 196.

- Light-colored areas are parts included with doors, sidelights and/or transoms. Dark-colored areas are additional Andersen® parts required to complete assembly as shown.
- Dimensions in parentheses are in millimeters.
- **Minimum rough openings may need to be increased to allow for use of building wraps, flashing, sill panning, brackets, fasteners or other items. See installation information on pages 226-227.**
- Details are for illustration only and are not intended to represent product installation methods or materials. Refer to product installation instructions at andersenwindows.com.
- Structural performance of any combination is only as high as the lowest structural performance of any individual product or join in the combination.

*Not available with contemporary option.

Transom Options

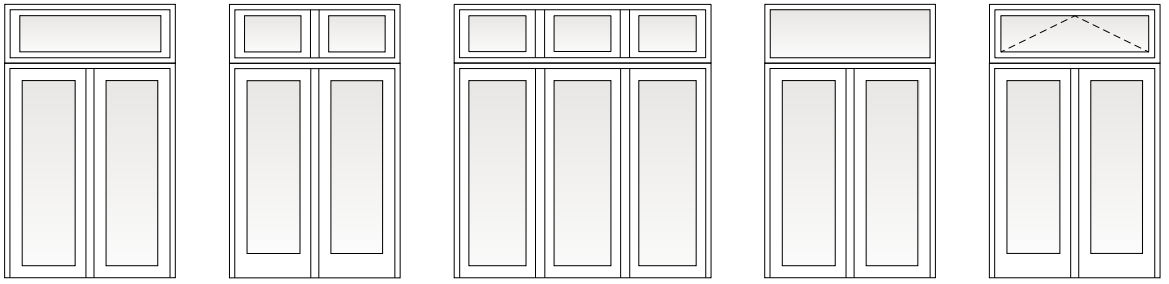

Sash-Set Transom | **Sash-Set Twin Transom** | **Sash-Set Triple Transom** | **Direct-Set Transom** | **Venting Transom Window***

Horizontal (stack) Easy Connect Fiberglass Joining Details

Scale 1 1/2" (38) = 1'-0" (305) — 1:8

Products with traditional option shown. Details also apply to products with contemporary option. Venting transoms windows are only available in traditional option.

A structural header is required to separate patio door transoms and transom windows from four-panel gliding patio doors.

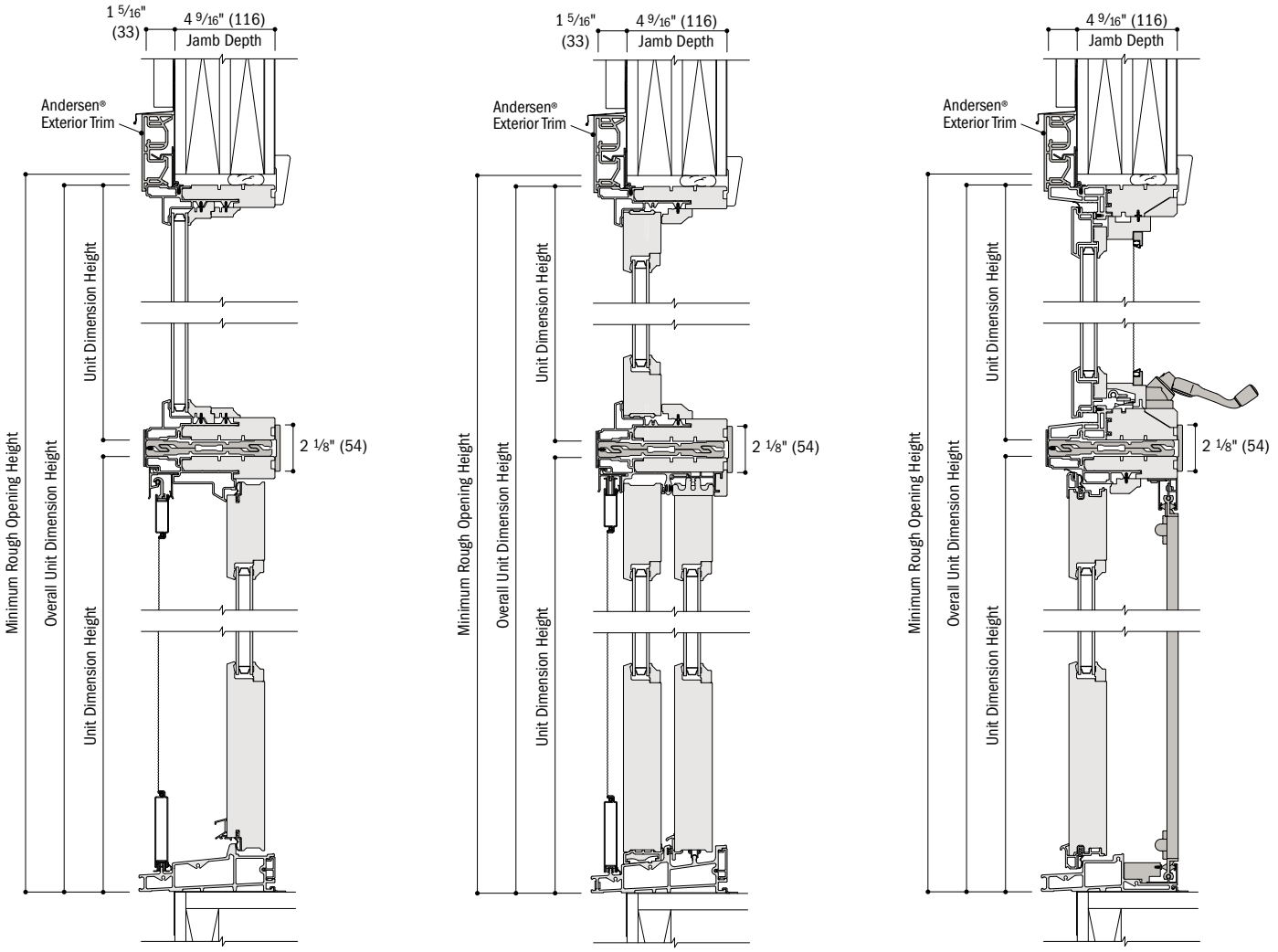

Direct-Set Transom
Over Hinged Inswing Patio Door

Sash-Set Transom
Over Gliding Patio Door

Venting Transom Window*
Over Hinged Outswing Patio Door

- Light-colored areas are parts included with doors, sidelights and/or transoms. Dark-colored areas are additional Andersen® parts required to complete assembly as shown.
- Dimensions in parentheses are in millimeters.
- **Minimum rough openings may need to be increased to allow for use of building wraps, flashing, sill panning, brackets, fasteners or other items. See installation information on pages 226-227.**
- Details are for illustration only and are not intended to represent product installation methods or materials. Refer to product installation instructions at andersenwindows.com.
- Structural performance of any combination is only as high as the lowest structural performance of any individual product or join in the combination.
- *Join venting transom windows over doors with traditional option only. Venting transom windows are not available with contemporary option.

Horizontal (stack) Easy Connect Fiberglass Joining Details

Scale 1 1/2" (38) = 1'-0" (305) – 1:8

Overall Transom/Door Dimension Height – Sum of individual transom/door heights plus 3/4" (19) per join.

Overall Sidelight Transom/Sidelight Dimension Height – Sum of individual sidelight transom/sidelight heights plus 3/4" (19) per join.

Overall Minimum Rough Opening Height – Overall dimension height plus 1/2" (13).

Products with traditional option shown. Details also apply to products with contemporary option. Venting transoms windows are only available in traditional option.

A structural header is required to separate patio door transoms and transom windows from four-panel gliding patio doors.

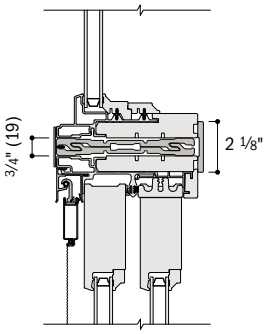

Direct-Set Transom Over Gliding Patio Door

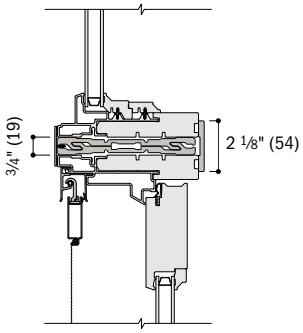

Direct-Set Transom Over Hinged Inswing Patio Door

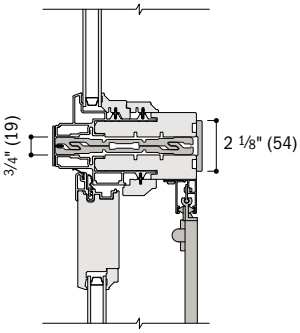

Direct-Set Transom Over Hinged Outswing Patio Door

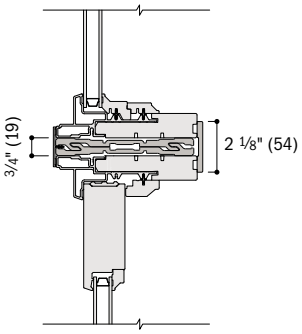

Direct-Set Transom Over Patio Door Sidelight

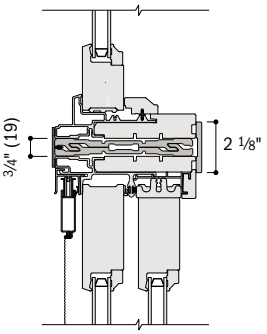

Sash-Set Transom Over Gliding Patio Door

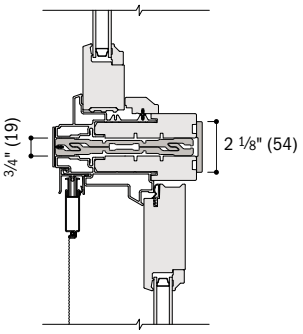

Sash-Set Transom Over Hinged Inswing Patio Door

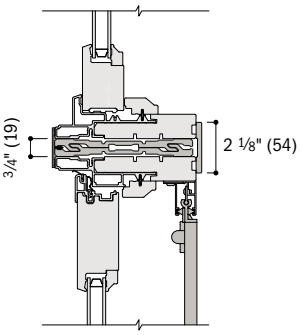

Sash-Set Transom Over Hinged Outswing Patio Door

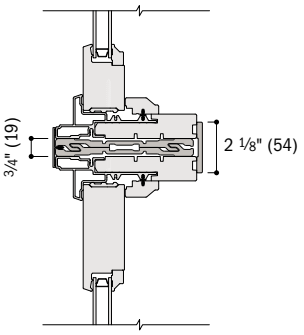

Sash-Set Sidelight Transom Over Patio Door Sidelight

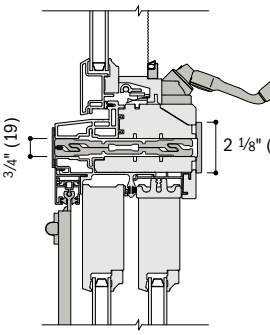

Venting Transom Window* Over Gliding Patio Door

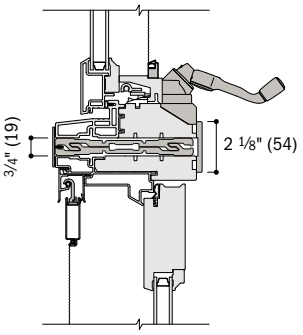

Venting Transom Window* Over Hinged Inswing Patio Door

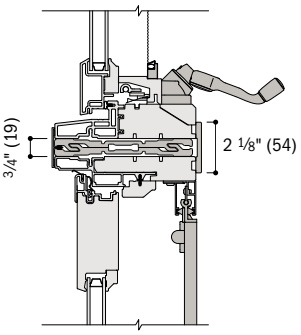

Venting Transom Window* Over Hinged Outswing Patio Door

For specialty windows over patio doors, see page 112. Formore information on joining, refer to the combination designs section starting on page 196.

- Light-colored areas are parts included with doors, sidelights and/or transoms. Dark-colored areas are additional Andersen® parts required to complete assembly as shown.
- Dimensions in parentheses are in millimeters.
- **Minimum rough openings may need to be increased to allow for use of building wraps, flashing, sill panning, brackets, fasteners or other items. See installation information on pages 226-227.**
- Details are for illustration only and are not intended to represent product installation methods or materials. Refer to product installation instructions at andersenwindows.com.
- Structural performance of any combination is only as high as the lowest structural performance of any individual product or join in the combination.

*Join venting transom windows over doors with traditional option only. Venting transom windows are not available with contemporary option.

Custom Sizes and Specification Formulas

A-Series custom-size patio doors, sidelights and transoms are available in 1/8" (3) increments between minimum and maximum widths and heights. Some restrictions apply. Contact your Andersen supplier.

Gliding Patio Doors

Dual-Pane & Triple-Pane

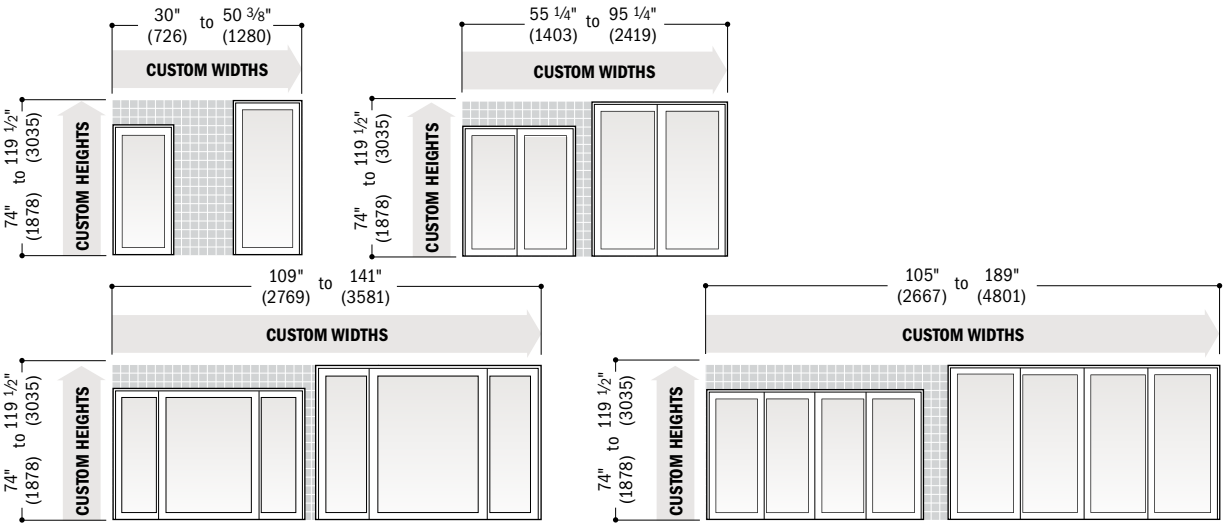

Clear Opening		Minimum R.O.		Unobst. Glass	
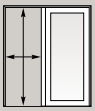 **Patio Doors** Traditional or Contemporary Panels	**Two-Panel** **Width** = (door width ÷ 2) - 8.368" (213) **Height** = door height - 3.927" (98) **Three-Panel, one panel open** **Width** = (door width ÷ 4) - 7.993" (203) **Height** = door height - 3.927" (100) **Four-Panel, two panels open** **Width** = (door width ÷ 2) - 15.458" (393) **Height** = door height - 3.927" (100)	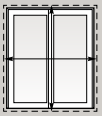 **Patio Doors** Traditional or Contemporary Panels	**Single-Panel** **Width** = door width + 3/4" (19) **Height** = door height + 1/2" (13) **Two-Panel** **Width** = door width + 3/4" (19) **Height** = door height + 1/2" (13) **Three-Panel** **Width** = door width + 1" (25) **Height** = door height + 1/2" (13) **Four-Panel** **Width** = door width + 1" (25) **Height** = door height + 1/2" (13)	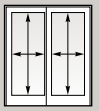 **Patio Doors** Traditional Panels	**Traditional Single-Panel** **Width** = door width − 11.22" (285) **Height** = door height − 16.06" (408) **Traditional Two-Panel** **Width** = door width − 17.00" (432) **Height** = door height − 16.06" (408) **Traditional Three-Panel** **Width** = door width − 22.78" (579) **Height** = door height − 16.06" (408) **Traditional Four-Panel** **Width** = door width − 11.22" (285) **Height** = door height − 16.06" (408)
				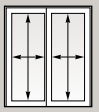 **Patio Doors** Contemporary Panels	**Contemporary Single-Panel** **Width** = door width − 11.22" (285) **Height** = door height − 11.90" (302) **Contemporary Two-Panel** **Width** = door width − 17.00" (432) **Height** = door height − 11.90" (302) **Contemporary Three-Panel** **Width** = door width − 22.78" (579) **Height** = door height − 11.90" (302) **Contemporary Four-Panel** **Width** = door width − 11.22" (285) **Height** = door height − 11.90" (302)

- Dimensions in parentheses are in millimeters.
- **Clear Opening** formulas provide dimensions for determining area available for egress. **Vent Opening** formulas provide dimensions for determining area available for passage of air. **Minimum R.O.** (minimum rough opening) formulas provide minimum rough opening width and height dimensions. **Unobst. Glass** (unobstructed glass) formulas provide dimensions for determining area available for passage of light.
- Custom minimum and maximum dimensions apply to patio doors with either traditional and contemporary panels. Contemporary panels shown.

Hinged Inswing Patio Doors

Dual-Pane & Triple-Pane

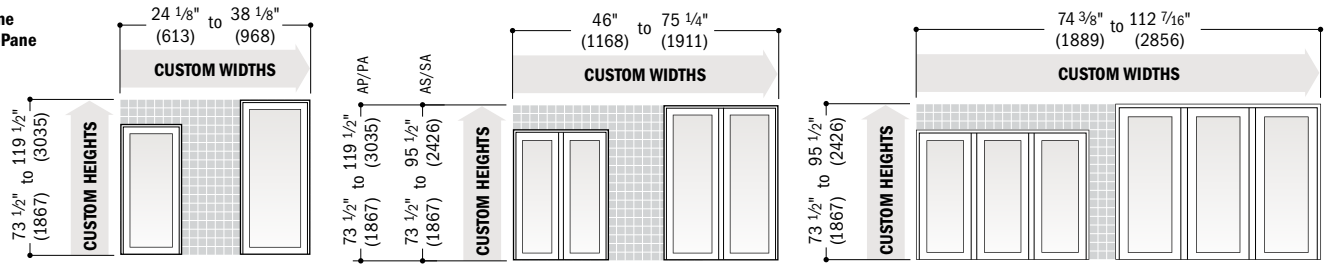

Clear Opening		Minimum R.O.		Unobst. Glass	
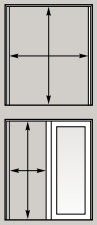 **Patio Doors** Traditional or Contemporary Panels	**Height** = door height - 4.232" (107) **Single-Panel** **Width** = door width - 5.799" (147) **Two-Panel, two panels open** **Width** = door width - 7.477" (190) **Two-Panel, one panel open** **Width** = (door width - 8.992" (228)) ÷ 2 **Three-Panel, one panel open** **Width** = (door width - 12.072" (307)) ÷ 3	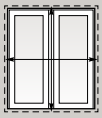 **Patio Doors** Traditional or Contemporary Panels	**Single-Panel** **Width** = door width + 3/4" (19) **Height** = door height + 1/2" (13) **Two-Panel** **Width** = door width + 3/4" (19) **Height** = door height + 1/2" (13) **Three-Panel** **Width** = door width + 3/4" (19) **Height** = door height + 1/2" (13)	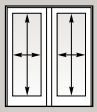 **Patio Doors** Traditional Panels 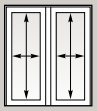 **Patio Doors** Contemporary Panels	**Traditional Single-Panel** **Width** = door width − 11.22" (285) **Height** = door height − 16.06" (408) **Traditional Two-Panel** **Width** = door width − 21.50" (546) **Height** = door height − 16.06" (408) **Traditional Three-Panel** **Width** = door width − 31.784" (807) **Height** = door height − 16.06" (408) **Contemporary Single-Panel** **Width** = door width − 11.22" (285) **Height** = door height − 11.90" (302) **Contemporary Two-Panel** **Width** = door width − 21.50" (546) **Height** = door height − 11.90" (302) **Contemporary Three-Panel** **Width** = door width − 31.784" (807) **Height** = door height − 11.90" (302)

Hinged Outswing Patio Doors

Dual-Pane & Triple-Pane

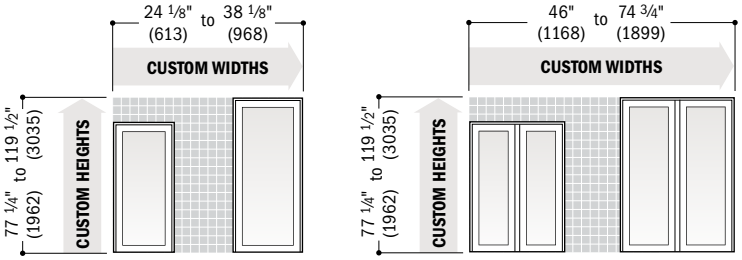

Clear Opening		Minimum R.O.		Unobst. Glass	
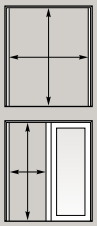 **Patio Doors** Traditional or Contemporary Panels	**Height** = door height - 3.418" (87) **Single-Panel** **Width** = door width - 5.04" (128) **Two-Panel, two panels open** **Width** = door width - 6.69" (170) **Two-Panel, one panel open** **Width** = (door width - 9.959" (253)) ÷ 2	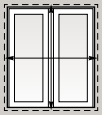 **Patio Doors** Traditional or Contemporary Panels	**Single-Panel** **Width** = door width + 3/4" (19) **Height** = door height + 1/2" (13) **Two-Panel** **Width** = door width + 3/4" (19) **Height** = door height + 1/2" (13)	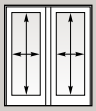 **Patio Doors** Traditional Panels 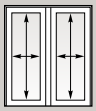 **Patio Doors** Contemporary Panels	**Traditional Single-Panel** **Width** = door width − 11.22" (285) **Height** = door height − 16.06" (408) **Traditional Two-Panel** **Width** = door width − 21.50" (546) **Height** = door height − 16.06" (408) **Contemporary Single-Panel** **Width** = door width − 11.22" (285) **Height** = door height − 11.90" (302) **Contemporary Two-Panel** **Width** = door width − 21.50" (546) **Height** = door height − 11.90" (302)

- Dimensions in parentheses are in millimeters.
- **Clear Opening** formulas provide dimensions for determining area available for egress. **Vent Opening** formulas provide dimensions for determining area available for passage of air. **Minimum R.O.** (minimum rough opening) formulas provide minimum rough opening width and height dimensions. **Unobst. Glass** (unobstructed glass) formulas provide dimensions for determining area available for passage of light.
- Custom minimum and maximum dimensions apply to patio doors with either traditional and contemporary panels. Contemporary panels shown.

Patio Door Sidelights

Dual-Pane & Triple-Pane

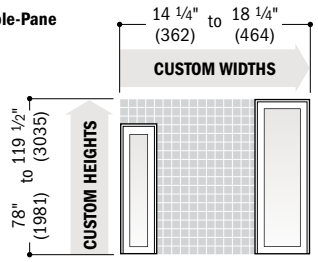

Minimum R.O.		Unobst. Glass	
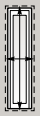 **Patio Door Sidelights** Traditional or Contemporary Panels	**Sidelight** **Width** = sidelight width + 3/4" (19) **Height** = sidelight height + 1/2" (13)	**Patio Door Sidelights** Traditional Panels **Patio Door Sidelights** Contemporary Panels	**Traditional Panel** **Width** = sidelight width − 7.84" (199) **Height** = sidelight height − 16.06" (408) **Contemporary Panel** **Width** = sidelight width − 7.84" (199) **Height** = sidelight height − 11.90" (302)

Patio Door Sidelight Transoms

Dual-Pane & Triple-Pane

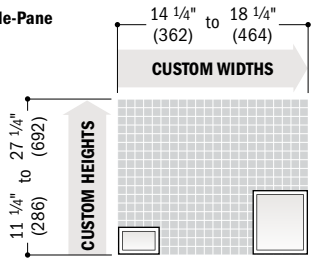

Minimum R.O.		Unobst. Glass	
Patio Door Transom Traditional or Contemporary	**Sash-Set Sidelight Transom** **Width** = transom width + 3/4" (19) **Height** = transom height + 3/4" (19) **Direct-Set Sidelight Transom** **Width** = transom width + 3/4" (19) **Height** = transom height + 3/4" (19)	**Patio Door Transom** Traditional or Contemporary	**Sash-Set Sidelight Transom** **Width** = transom width − 7.84" (199) **Height** = transom height − 7.84" (199) **Direct-Set Sidelight Transom** **Width** = transom width − 3.66" (93) **Height** = transom height − 3.66" (93)

- Dimensions in parentheses are in millimeters.
- **Minimum R.O.** (minimum rough opening) formulas provide minimum rough opening width and height dimensions. **Unobst. Glass** (unobstructed glass) formulas provide dimensions for determining area available for passage of light.
- Custom minimum and maximum dimensions apply to patio door sidelights with either traditional and contemporary panels. Contemporary panels shown.

Patio Door Transoms

Dual-Pane & Triple-Pane

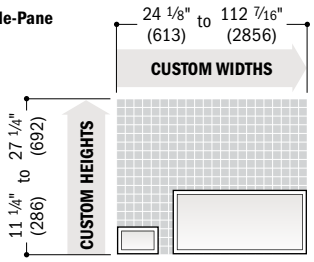

For custom sizes and specification formulas for venting transom windows, see page 69.

Minimum R.O.		Unobst. Glass	
Patio Door Sidelight Transom Traditional or Contemporary	**Direct-Set Transom** **Width** = transom width + 3/4" (19) **Height** = transom height + 3/4" (19) **Sash-Set Transom** **Width** = transom width + 3/4" (19) **Height** = transom height + 3/4" (19)	**Patio Door Sidelight Transom** Traditional or Contemporary	**Direct-Set Transom** **Width** = transom width − 3.66" (93) **Height** = transom height − 3.66" (93) **Sash-Set Transom** **Width** = transom width − 11.22" (285) **Height** = transom height − 7.84" (199)

Patio Door Twin and Triple Transoms

Dual-Pane & Triple-Pane

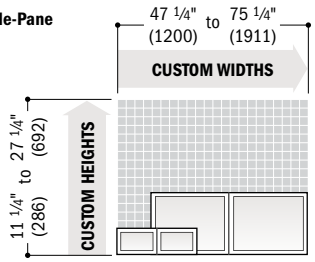

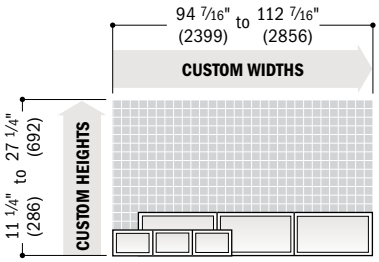

Minimum R.O.		Unobst. Glass	
Patio Door Transom Traditional or Contemporary	**Twin** **Width** = transom width + 3/4" (19) **Height** = transom height + 3/4" (19) **Triple** **Width** = transom width + 3/4" (19) **Height** = transom height + 3/4" (19)	**Patio Door Transom** Traditional or Contemporary	**Twin** **Width** = transom width − 21.5" (546) **Height** = transom height − 7.84" (199) **Triple** **Width** = transom width − 31.78" (807) **Height** = transom height − 7.84" (199)

Custom Size Patio Door Shipping Information

	DOOR PRODUCT TYPE & SIZE		FACTORY-ASSEMBLED	UNASSEMBLED with Assembled Frame Panels ship separately	UNASSEMBLED with Unassembled Frame Panels ship separately
8' TALL OR LESS	Single-Panel	Gliding	√		
	Single-Panel	Hinged	√		
	Two-Panel	Gliding	√		√
	Two-Panel	Hinged	√		
	Three- or Four-Panel	Gliding			√
	Three-Panel	Hinged	√		
OVER 8' TALL	Single-Panel	Gliding	√		
	Single-Panel	Hinged	√		
	Two-Panel	Gliding			√
	Two-Panel*	Hinged		√	
	Three- or Four-Panel	Gliding			√

*Two-panel hinged inswing patio doors over 8' (2438) tall are only available active/passive or passive/active (AP/PA).

- Dimensions in parentheses are in millimeters.
- **Minimum R.O.** (minimum rough opening) formulas provide minimum rough opening width and height dimensions. **Unobst. Glass** (unobstructed glass) formulas provide dimensions for determining area available for passage of light.

NOTES

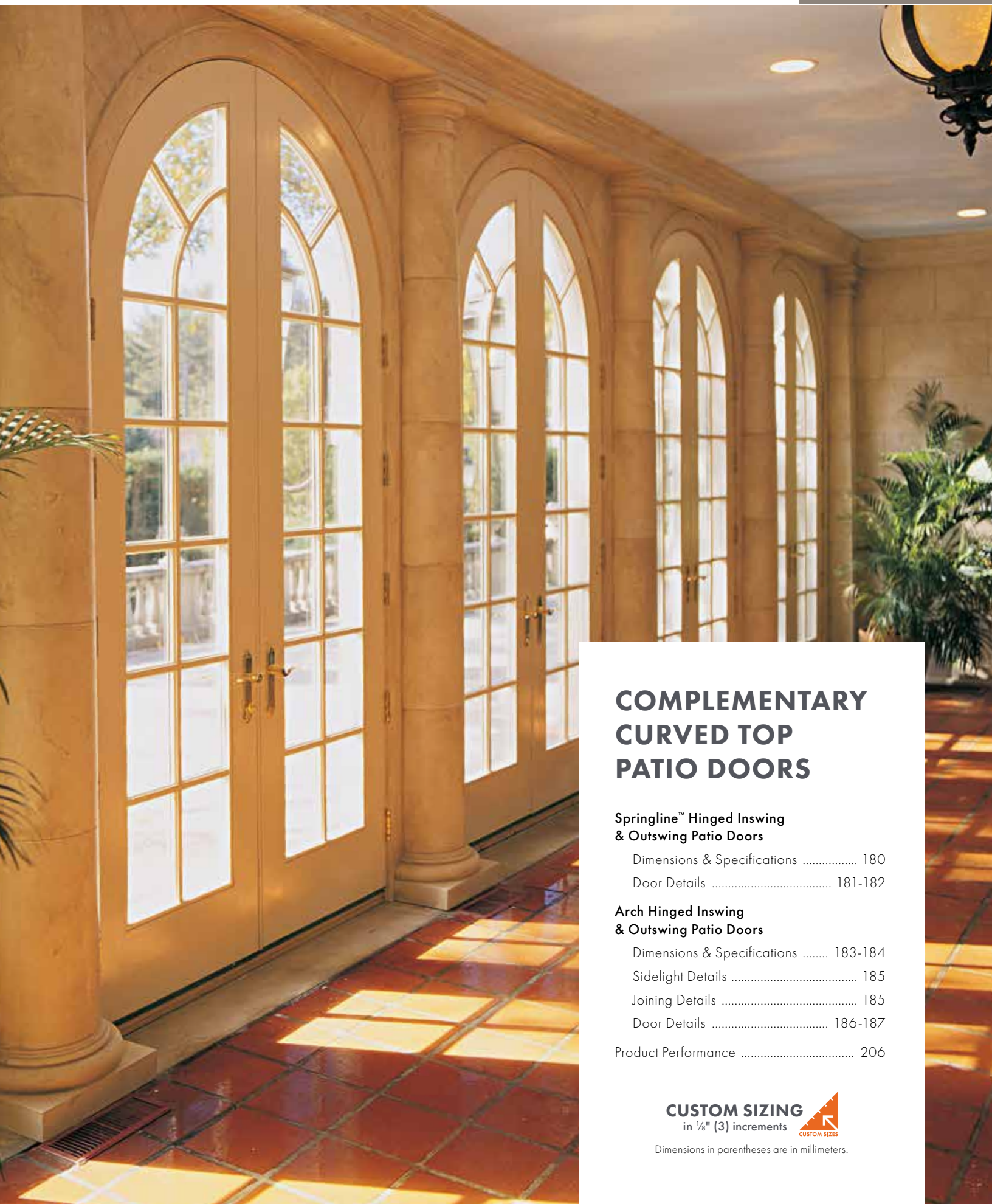

COMPLEMENTARY CURVED TOP PATIO DOORS

Springline™ Hinged Inswing & Outswing Patio Doors

Dimensions & Specifications 180
Door Details 181-182

Arch Hinged Inswing & Outswing Patio Doors

Dimensions & Specifications 183-184
Sidelight Details 185
Joining Details 185
Door Details 186-187

Product Performance 206

CUSTOM SIZING
in ⅛" (3) increments
CUSTOM SIZES

Dimensions in parentheses are in millimeters.

COMPLEMENTARY CURVED TOP PATIO DOORS

FEATURES

FRAME

A Heavy-duty extruded aluminum cladding protects the frame exterior, providing low-maintenance durability. Standard cladding finish meets the AAMA 2604 specification. An optional finish that meets the AAMA 2605 specification is also available.

Installation flange extends 1 ½" (38) around three sides of the unit to help properly position the unit in the opening. Installation clips are standard for increased structural anchoring to building members. Mounted around the frame perimeter, the clips rotate into position and can be bent into place against the framing members to suit all jamb conditions.

B Wood frame members are treated with a water-repellent wood preservative for long-lasting* protection and performance. Radii are made of laminated continuous veneers. Lineal components are engineered wood with a pine core.

C Extruded aluminum sill is thermally broken and available in a painted bronze or gray finish. Innovative sill design provides superior water management. Standard outswing sills have an oak cap. Maple or mahogany** is optional. Inswing sills have an interior wood trim strip to match the interior finish.

D One-piece compression weatherstrip at the frame sides and head protects against air and water infiltration. Flexible thermoplastic sweep is featured at the bottom of the panel on inswing units. Outswing doors also feature a polypropylene rain skirt at the panel sides and top for added protection.

PANEL

E Heavy-duty extruded aluminum cladding protects the panel exterior, providing low-maintenance durability.

F Panel interior surfaces are unfinished wood veneers. Available species are pine, maple, vertical grain Douglas fir, oak, mahogany,** alder, mixed grain Douglas fir, hickory, cherry, white oak and walnut. Available prefinished in all interior paint colors.

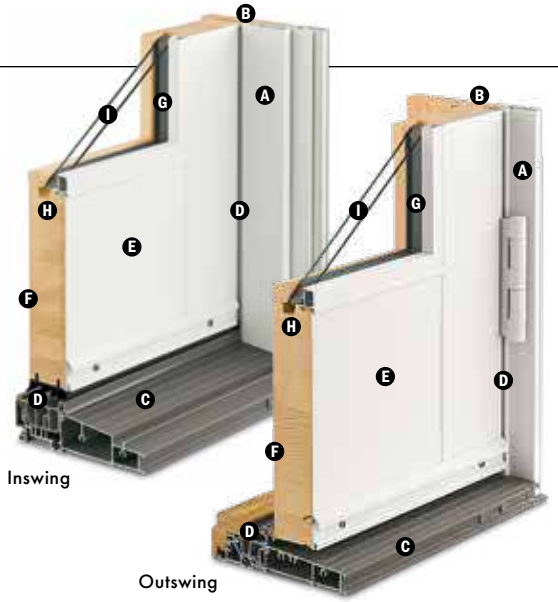

GLASS

G In addition to stainless steel glass spacers, black or white glass spacers are available to allow the spacer to blend in with the unit color.

H Silicone glazing bead combined with two-sided silicone tape provide superior weathertightness.

I High-Performance glass options include:

- Low-E4® tempered glass
- Low-E4 HeatLock® tempered glass
- Low-E4 SmartSun™ tempered glass
- Low-E4 SmartSun HeatLock tempered glass
- Low-E4 Sun tempered glass

Additional glass options are available. Contact your Andersen supplier.

A removable translucent film helps shield the glass from damage during delivery and construction, and simplifies finishing at the job site.

OPERATION

Inswing and outswing units are available. Choose left-hinged, right-hinged or stationary as viewed from the exterior.

HARDWARE

Multi-Point Locking System

The complementary hinged patio door has a multi-point locking system with a hook bolt above and below the center dead bolt. This system provides a weathertight seal and enhanced security.

Hinges

Adjustable hinges are standard on inswing doors and have ball-bearing pivots for smooth, frictionless movement. Feature easy horizontal and vertical adjustment, plus quick-release for easy panel removal. The release feature is ideal for transporting large units up stairs or to other hard-to-reach areas.

Ball-bearing hinges are standard on outswing doors and are available in finishes that coordinate with hardware trim sets. For units with a prefinished white interior, white finish hinges are standard. Also available in finishes that coordinate with hardware.

ACCESSORIES Sold Separately

FRAME

Extension Jambs

Inswing and outswing standard jamb depth is 4 9/16" (116). Inswing is also available in a 6 9/16" (167) jamb depth. Interior extension jambs are available in 1/16" (1.5) increments between 4 9/16" (116) and 7 1/8" (181). Additional dimensions are available. Contact your Andersen supplier for more information.

Interior extension jambs on inswing units will restrict the full opening of the door.

Casings

Curved interior casings are available in the same profiles as other Andersen® products. Curved exterior aluminum and wood casings are available in matching radii and a variety of profiles.

HARDWARE

Exterior Keyed Lock

A six-pin key cylinder lock is available for all patio doors in styles and finishes that coordinate with the hardware. This lock allows the door to be locked and unlocked from the exterior.

GRILLES

Grilles are available in a variety of configurations and widths.

ART GLASS

Decorative insulated art glass designs are available.

*Visit andersenwindows.com/warranty for details.
**Actual wood species is either Sapele or Sipo, both non-endangered species grown in Africa, with color and characteristics similar to Central American mahoganies.
Dimensions in parentheses are in millimeters.

EXTERIORS & INTERIORS

EXTERIOR COLORS

White | Canvas | Prairie Grass | Sandtone | Terratone | Cocoa Bean | Dark Bronze | Red Rock | Forest Green | Dove Gray | Black

For custom colors, contact your Andersen supplier.

INTERIOR WOOD SPECIES

Pine | Maple | Vertical Grain Douglas Fir | Oak | Mahogany* | Alder

Mixed Grain Douglas Fir | Hickory | Cherry | White Oak | Walnut

All wood interiors are unfinished unless a paint color is specified. Naturally occurring variations in grain, color and texture of wood make each door one of a kind.

INTERIOR PAINT COLORS

White | Birch Bark | Primed (for paint) | Anodized Silver

Also available in 11 exterior colors shown above and custom colors. Painted colors on pine, except anodized silver; anodized silver on maple only. Dark bronze and black also available on maple.

HARDWARE Sold Separately

YUMA®
Distressed Bronze
Distressed Nickel

ENCINO®
Distressed Bronze
Distressed Nickel

NEWBURY®
Antique Brass
Bright Brass
Oil Rubbed Bronze
Satin Nickel

ANVERS®
Bright Brass
Oil Rubbed Bronze
Satin Nickel

ALBANY
Black
Stone
White

TRIBECA®
Black
Stone
White

Bold name denotes finish shown.

HARDWARE FINISHES

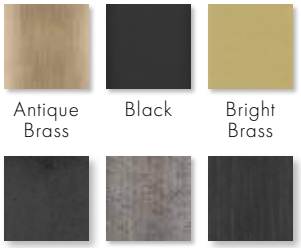

Antique Brass | Black | Bright Brass

Distressed Bronze | Distressed Nickel | Oil Rubbed Bronze

Satin Nickel | Stone | White

FSB® HARDWARE FOR HINGED PATIO DOORS

1035 | 1075 | 1076 | 1102**

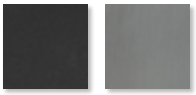

Black Anodized Aluminum | Satin Stainless Steel

*Actual wood species is either Sapele or Sipo, both non-endangered species grown in Africa, with color and characteristics similar to Central American mahoganies.

**FSB style 1102 is not available in black anodized aluminum.

Matching hinges available in most hardware finishes for inswing patio doors; excludes FSB hardware.

Mix and match interior and exterior style and finish options are available; excludes FSB hardware.

Bright brass and satin nickel finishes feature a 10-year limited warranty.

Albany and Tribeca hardware are zinc die-cast with powder-coated durable finish; Yuma, Encino, Newbury and Anvers are solid forged brass..

Distressed bronze and oil rubbed bronze are "living" finishes that will change with time and use.

Printing limitations prevent exact replication of colors and finishes. See your Andersen supplier for actual color and finish samples.

"FSB" is a registered trademark of Franz Schneider Brakel GmbH & Co.

COMPLEMENTARY CURVED TOP PATIO DOORS

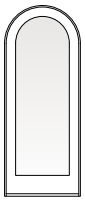

1 AHISDxx80

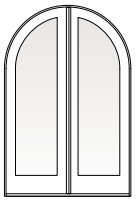

1 AHISDxx80**AP/PA**

Custom-size doors are available in 1/8" (3) increments.

Traditional panels are standard. Custom-designed and 3/4-light panels are also available. Stationary doors are also available (i.e., 3180**S** or 4080**SS**). Add **AHISD** to "Door Number" listed in table (i.e., **AHISD**3180).

Complementary Springline™ Hinged Inswing Patio Door Dimensions and Specifications

Door Number	Number of Panels Open*	Door Dimensions: Radius Inches/(mm)	Door Dimensions: Side Height Inches/(mm)	Door Dimensions: Width Inches/(mm)	Door Dimensions: Height Inches/(mm)	Min. Rough Opening: Width Inches/(mm)	Min. Rough Opening: Height Inches/(mm)	Clear Opening Area Sq. Ft./(m²)	Clear Opening Maximums: 90° Open Position Width Inches/(mm)	Clear Opening Maximums: Full Open Position Width Inches/(mm)	Clear Opening Maximums: Height Inches/(mm)	Glass Area Sq. Ft./(m²)	Vent Area Sq. Ft./(m²)	Overall Door Area Sq. Ft./(m²)
3180	1	18" (457)	77 1/2" (1969)	35 15/16" (913)	95 1/2" (2426)	37" (940)	96" (2438)	17.26 (1.60)	30 7/8" (784)	32 13/16" (833)	75 3/4" (1924)	13.28 (1.23)	20.27 (1.88)	22.88 (2.13)
3380	1	19" (483)	76 1/2" (1943)	37 15/16" (964)	95 1/2" (2426)	39" (991)	96" (2438)	18.07 (1.68)	32 7/8" (835)	34 13/16" (884)	74 3/4" (1899)	14.31 (1.33)	21.45 (1.99)	24.09 (2.24)
4080	2	23 5/8" (600)	71 7/8" (1826)	47 1/4" (1200)	95 1/2" (2426)	48" (1219)	96" (2438)	21.34 (1.98)	39 15/16" (1014)	43 13/16" (1113)	70 1/8" (1781)	13.27 (1.23)	26.72 (2.48)	29.67 (2.76)
4080	1	23 5/8" (600)	71 7/8" (1826)	47 1/4" (1200)	95 1/2" (2426)	48" (1219)	96" (2438)	10.17 (0.94)	18 15/16" (481)	20 7/8" (530)	70 1/8" (1781)	13.27 (1.23)	11.72 (1.09)	29.67 (2.76)
5080	2	29 5/8" (752)	65 7/8" (1673)	59 1/4" (1505)	95 1/2" (2426)	60" (1524)	96" (2438)	24.85 (2.31)	51 15/16" (1319)	55 13/16" (1418)	64 1/8" (1629)	19.14 (1.78)	33.54 (3.12)	36.68 (3.41)
5080	1	29 5/8" (752)	65 7/8" (1673)	59 1/4" (1505)	95 1/2" (2426)	60" (1524)	96" (2438)	11.97 (1.11)	24 15/16" (633)	26 7/8" (683)	64 1/8" (1629)	19.14 (1.78)	14.53 (1.35)	36.68 (3.41)
5480	2	31 5/8" (803)	63 7/8" (1622)	63 1/4" (1607)	95 1/2" (2426)	64" (1626)	96" (2438)	25.80 (2.40)	55 15/16" (1421)	59 13/16" (1519)	62 1/8" (1578)	21.05 (1.96)	35.77 (3.32)	38.97 (3.62)
5480	1	31 5/8" (803)	63 7/8" (1622)	63 1/4" (1607)	95 1/2" (2426)	64" (1626)	96" (2438)	12.46 (1.16)	26 15/16" (684)	28 7/8" (733)	62 1/8" (1578)	21.05 (1.96)	15.45 (1.44)	38.97 (3.62)
6080	2	35 5/8" (905)	59 7/8" (1521)	71 1/4" (1810)	95 1/2" (2426)	72" (1829)	96" (2438)	27.37 (2.54)	63 15/16" (1624)	67 13/16" (1722)	58 1/8" (1476)	24.79 (2.30)	40.15 (3.73)	43.47 (4.04)
6080	1	35 5/8" (905)	59 7/8" (1521)	71 1/4" (1810)	95 1/2" (2426)	72" (1829)	96" (2438)	13.27 (1.23)	30 15/16" (786)	32 7/8" (835)	58 1/8" (1476)	24.79 (2.30)	17.24 (1.60)	43.47 (4.04)
6480	2	37 5/8" (956)	57 7/8" (1470)	75 1/4" (1911)	95 1/2" (2426)	76" (1930)	96" (2438)	27.99 (2.60)	67 15/16" (1726)	71 13/16" (1824)	56 1/8" (1426)	26.63 (2.47)	42.30 (3.93)	45.69 (4.24)
6480	1	37 5/8" (956)	57 7/8" (1470)	75 1/4" (1911)	95 1/2" (2426)	76" (1930)	96" (2438)	13.59 (1.26)	32 15/16" (837)	34 7/8" (886)	56 1/8" (1426)	26.63 (2.47)	19.84 (1.84)	45.69 (4.24)

• "Door Dimension" always refers to outside frame-to-frame dimension.
• "**Minimum Rough Opening**" **dimensions may need to be increased to allow for use of building wraps, flashing, sill panning, brackets, fasteners or other items. See pages 226-227 for more details.**
• Dimensions in parentheses are in millimeters or square meters.
*For two-panel patio doors with one panel open, clear opening is based on active panel being open and passive panel being closed.

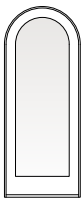

1 AOSDxx80

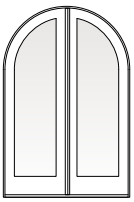

1 AOSDxx80**AP/PA**

Custom-size doors are available in 1/8" (3) increments.

Traditional panels are standard. Custom-designed and 3/4-light panels are also available. Stationary doors are also available (i.e., 3180**S** or 4080**SS**). Add **AOSD** to "Door Number" listed in table (i.e., **AOSD**3180).

Complementary Springline™ Hinged Outswing Patio Door Dimensions and Specifications

Door Number	Number of Panels Open*	Door Dimensions: Radius Inches/(mm)	Door Dimensions: Side Height Inches/(mm)	Door Dimensions: Width Inches/(mm)	Door Dimensions: Height Inches/(mm)	Min. Rough Opening: Width Inches/(mm)	Min. Rough Opening: Height Inches/(mm)	Clear Opening Area Sq. Ft./(m²)	Clear Opening Maximums: 90° Open Position Width Inches/(mm)	Clear Opening Maximums: Full Open Position Width Inches/(mm)	Clear Opening Maximums: Height Inches/(mm)	Glass Area Sq. Ft./(m²)	Vent Area Sq. Ft./(m²)	Overall Door Area Sq. Ft./(m²)
3180	1	18" (457)	77 1/2" (1969)	35 15/16" (913)	95 1/2" (2426)	37" (940)	96" (2438)	17.52 (1.63)	31 3/8" (797)	33 5/16" (846)	75 3/4" (1924)	13.28 (1.23)	20.53 (1.91)	22.88 (2.13)
3380	1	19" (483)	76 1/2" (1943)	37 15/16" (964)	95 1/2" (2426)	39" (991)	96" (2438)	18.33 (1.70)	33 3/8" (848)	35 5/16" (897)	74 3/4" (1899)	14.31 (1.33)	21.71 (2.02)	24.09 (2.24)
4080	2	23 5/8" (600)	71 7/8" (1826)	47 1/4" (1200)	95 1/2" (2426)	48" (1219)	96" (2438)	21.73 (2.02)	40 11/16" (1033)	44 5/8" (1133)	70 1/8" (1781)	13.27 (1.23)	27.12 (2.52)	29.67 (2.76)
4080	1	23 5/8" (600)	71 7/8" (1826)	47 1/4" (1200)	95 1/2" (2426)	48" (1219)	96" (2438)	10.35 (0.96)	19 1/4" (489)	21 1/4" (540)	70 1/8" (1781)	13.27 (1.23)	11.72 (1.09)	29.67 (2.76)
5080	2	29 5/8" (752)	65 7/8" (1673)	59 1/4" (1505)	95 1/2" (2426)	60" (1524)	96" (2438)	25.22 (2.34)	52 11/16" (1338)	56 5/8" (1438)	64 1/8" (1629)	19.14 (1.78)	33.90 (3.15)	36.68 (3.41)
5080	1	29 5/8" (752)	65 7/8" (1673)	59 1/4" (1505)	95 1/2" (2426)	60" (1524)	96" (2438)	12.13 (1.13)	25 1/4" (641)	27 1/4" (692)	64 1/8" (1629)	19.14 (1.78)	14.53 (1.35)	36.68 (3.41)
5480	2	31 5/8" (803)	63 7/8" (1622)	63 1/4" (1607)	95 1/2" (2426)	64" (1626)	96" (2438)	26.16 (2.43)	56 11/16" (1440)	60 5/8" (1540)	62 1/8" (1578)	21.05 (1.96)	36.12 (3.36)	38.97 (3.62)
5480	1	31 5/8" (803)	63 7/8" (1622)	63 1/4" (1607)	95 1/2" (2426)	64" (1626)	96" (2438)	12.62 (1.17)	27 1/4" (692)	29 1/4" (743)	62 1/8" (1578)	21.05 (1.96)	15.45 (1.44)	38.97 (3.62)
6080	2	35 5/8" (905)	59 7/8" (1521)	71 1/4" (1810)	95 1/2" (2426)	72" (1829)	96" (2438)	27.70 (2.57)	64 11/16" (1643)	68 5/8" (1743)	58 1/8" (1476)	24.79 (2.30)	40.48 (3.76)	43.47 (4.04)
6080	1	35 5/8" (905)	59 7/8" (1521)	71 1/4" (1810)	95 1/2" (2426)	72" (1829)	96" (2438)	13.42 (1.25)	31 1/4" (794)	33 1/4" (845)	58 1/8" (1476)	24.79 (2.30)	17.24 (1.60)	43.47 (4.04)
6480	2	37 5/8" (956)	57 7/8" (1470)	75 1/4" (1911)	95 1/2" (2426)	76" (1930)	96" (2438)	28.31 (2.63)	68 11/16" (1745)	72 5/8" (1845)	56 1/8" (1426)	26.63 (2.47)	42.62 (3.96)	45.69 (4.24)
6480	1	37 5/8" (956)	57 7/8" (1470)	75 1/4" (1911)	95 1/2" (2426)	76" (1930)	96" (2438)	13.74 (1.28)	33 1/4" (845)	35 1/4" (895)	56 1/8" (1426)	26.63 (2.47)	19.84 (1.84)	45.69 (4.24)

• "Door Dimension" always refers to outside frame-to-frame dimension.
• "**Minimum Rough Opening**" **dimensions may need to be increased to allow for use of building wraps, flashing, sill panning, brackets, fasteners or other items. See pages 226-227 for more details.**
• Dimensions in parentheses are in millimeters or square meters.
*For two-panel patio doors with one panel open, clear opening is based on active panel being open and passive panel being closed.

Complementary Springline™ Hinged Inswing Patio Door Details – 4 9/16" (116) Base Jamb Depth

Scale 1 1/2" (38) = 1'-0" (305) – 1:8

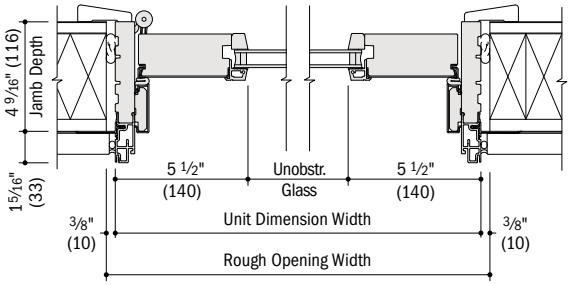

Horizontal Section

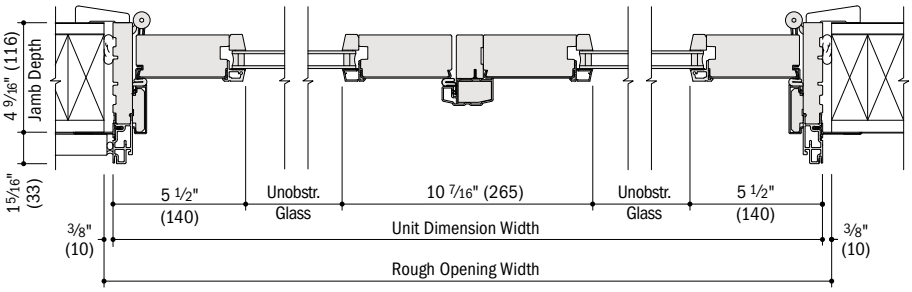

Horizontal Section
Two-Panel

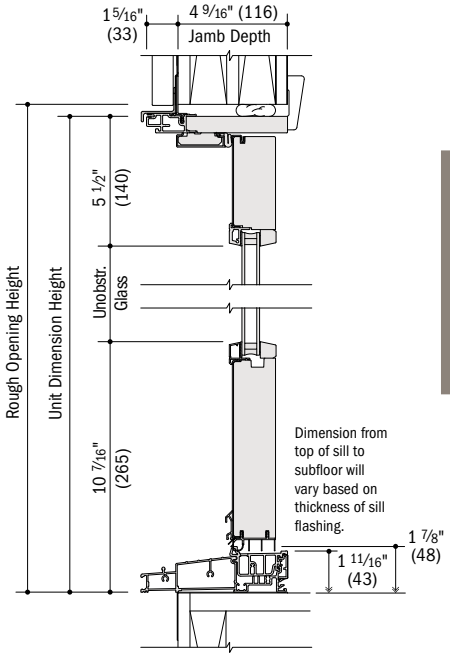

Vertical Section

Complementary Springline™ Hinged Inswing Patio Door Details – 6 9/16" (167) Base Jamb Depth

Scale 1 1/2" (38) = 1'-0" (305) – 1:8

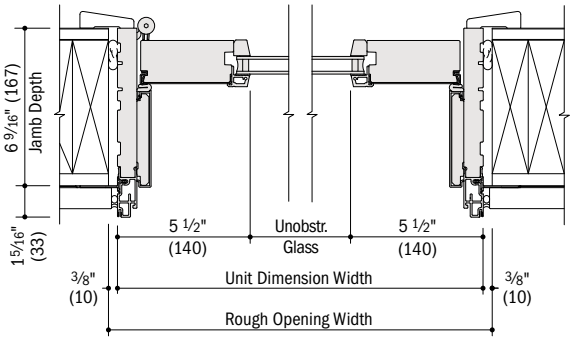

Horizontal Section

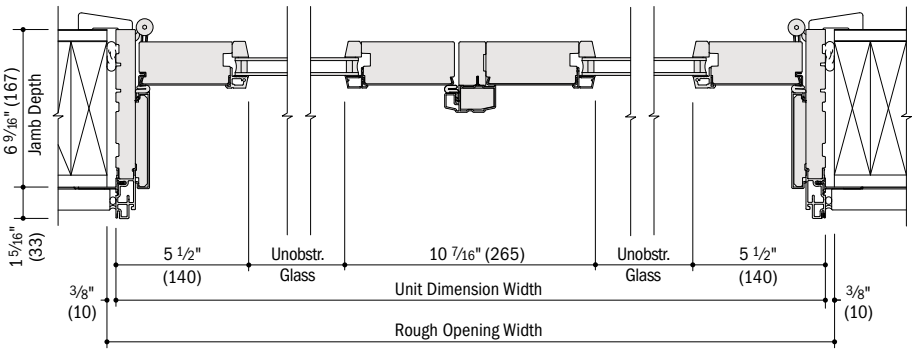

Horizontal Section
Two-Panel

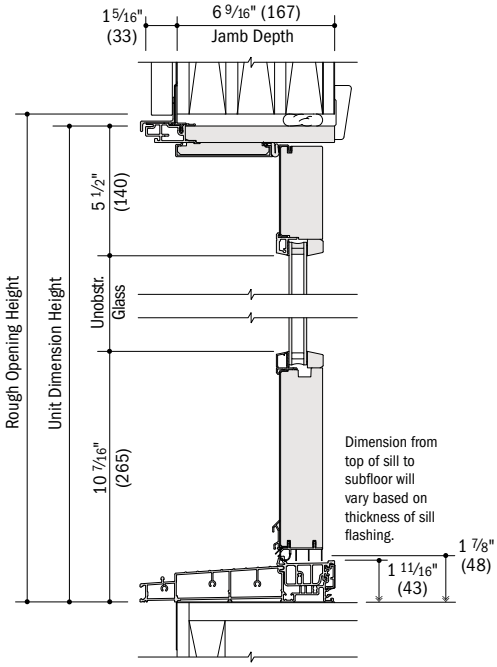

Vertical Section

- 4 9/16" (116) and 6 9/16" (167) overall jamb depth measurements are from back side of installation flange.
- Light-colored areas are parts included with door. Dark-colored areas are additional Andersen® parts required to complete door assembly as shown.
- **Minimum rough openings may need to be increased to allow for use of building wraps, flashing, sill panning, brackets, fasteners or other items. See installation information on pages 226-227.**
- Details are for illustration only and are not intended to represent product installation methods or materials. Refer to product installation guides at andersenwindows.com.
- Dimensions in parentheses are in millimeters.

Complementary Springline™ Hinged Outswing Patio Door Details

Scale 1 1/2" (38) = 1'-0" (305) — 1:8

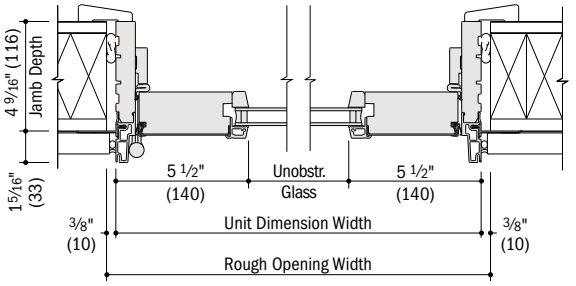

Horizontal Section

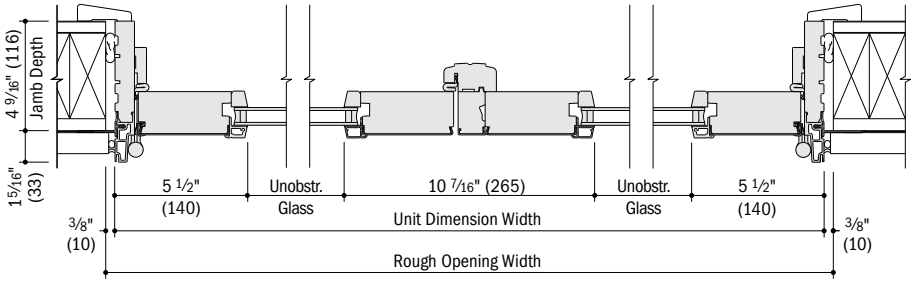

Horizontal Section
Two-Panel

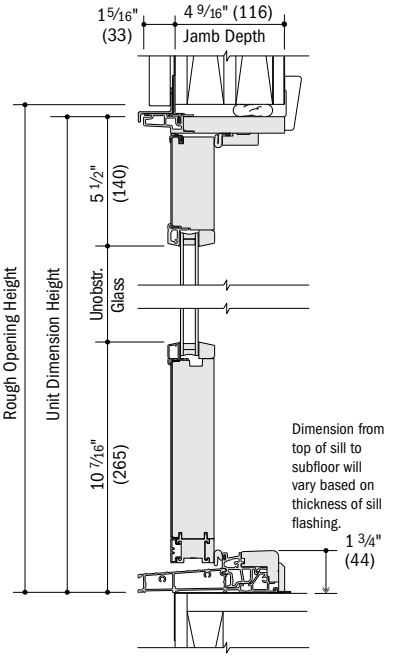

Vertical Section

- 4 9/16" (116) overall jamb depth measurements are from back side of installation flange.
- Light-colored areas are parts included with door. Dark-colored areas are additional Andersen® parts required to complete door assembly as shown.
- **Minimum rough openings may need to be increased to allow for use of building wraps, flashing, sill panning, brackets, fasteners or other items. See installation information on pages 226-227.**
- Details are for illustration only and are not intended to represent product installation methods or materials. Refer to product installation guides at andersenwindows.com.
- Dimensions in parentheses are in millimeters.

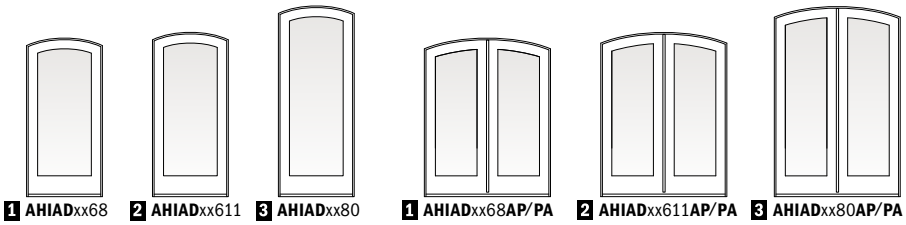

1 AHIADxx68 **2 AHIAD**xx611 **3 AHIAD**xx80 **1 AHIAD**xx68**AP/PA** **2 AHIAD**xx611**AP/PA** **3 AHIAD**xx80**AP/PA**

Custom-size doors are available in 1/8" (3) increments. Traditional panels are standard. Custom-designed and 3/4-light panels are also available. Stationary doors are also available (i.e., 2168**S** or 4068**SS**). Add **AHIAD** to "Door Number" listed in table (i.e., **AHIAD**2168).

Complementary Arch Hinged Inswing Patio Door Dimensions and Specifications

Door Number	Number of Panels Open*	Door Dimensions				Min. Rough Opening		Clear Opening Area Sq. Ft./(m²)	Clear Opening Maximums			Glass Area Sq. Ft./(m²)	Vent Area Sq. Ft./(m²)	Overall Door Area Sq. Ft./(m²)
		Radius Inches/(mm)	Side Height Inches/(mm)	Width Inches/(mm)	Height Inches/(mm)	Width Inches/(mm)	Height Inches/(mm)		90° Open Position Width Inches/(mm)	Full Open Position Width Inches/(mm)	Height Inches/(mm)			
2168	1	36" (914)	77 7/16" (1967)	23 15/16" (608)	79 1/2" (2019)	25" (635)	80" (2032)	10.79 (1.00)	18 7/8" (479)	20 13/16" (529)	74 11/16" (1897)	5.66 (0.53)	12.46 (1.16)	14.49 (1.35)
2768	1	48" (1219)	77 1/8" (1959)	29 15/16" (760)	79 1/2" (2019)	31" (787)	80" (2032)	13.84 (1.29)	24 7/8" (632)	26 13/16" (681)	74 5/16" (1888)	8.28 (0.77)	15.70 (1.46)	17.85 (1.66)
2968	1	48" (1219)	76 3/4" (1949)	31 15/16" (811)	79 1/2" (2019)	33" (838)	80" (2032)	14.81 (1.38)	26 7/8" (683)	28 13/16" (732)	74" (1880)	9.15 (0.85)	16.77 (1.56)	18.95 (1.76)
3168	1	48" (1219)	76" (1930)	35 15/16" (913)	79 1/2" (2019)	37" (940)	80" (2032)	16.71 (1.55)	30 7/8" (784)	32 13/16" (833)	73 5/16" (1862)	10.87 (1.01)	18.88 (1.75)	21.13 (1.96)
3368	1	48" (1219)	75 5/8" (1921)	37 15/16" (964)	79 1/2" (2019)	39" (991)	80" (2032)	17.86 (1.66)	32 7/8" (835)	34 13/16" (884)	73 7/8" (1876)	11.72 (1.09)	22.01 (2.04)	24.36 (2.26)
21611	1	36" (914)	80 5/16" (2040)	23 15/16" (608)	82 3/8" (2092)	25" (635)	83" (2108)	11.21 (1.04)	18 7/8" (479)	20 13/16" (529)	77 9/16" (1970)	5.93 (0.55)	14.39 (1.34)	16.65 (1.55)
27611	1	48" (1219)	80" (2032)	29 15/16" (760)	82 3/8" (2092)	31" (787)	83" (2108);	14.37 (1.33)	24 7/8" (632)	26 13/16" (681)	77 3/16" (1961)	8.68 (0.81)	18.17 (1.69)	20.55 (1.91)
29611	1	48" (1219)	79 5/8" (2022)	31 15/16" (811)	82 3/8" (2092)	33" (838)	83" (2108)	15.38 (1.43)	26 7/8" (683)	28 13/16" (732)	76 7/8" (1953)	9.58 (0.89)	19.41 (1.80)	21.83 (2.03)
31611	1	48" (1219)	78 7/8" (2003)	35 15/16" (913)	82 3/8" (2092)	37" (940)	83" (2108)	17.36 (1.61)	30 7/8" (784)	32 13/16" (833)	76 3/16" (1935)	11.39 (1.06)	21.89 (2.03)	24.37 (2.26)
33611	1	48" (1219)	78 1/2" (1994)	37 15/16" (964)	82 3/8" (2092)	39" (991)	83" (2108)	18.55 (1.72)	32 7/8" (835)	34 13/16" (884)	76 3/4" (1949)	12.28 (1.14)	25.19 (2.34)	27.78 (2.58)
2180	1	36" (914)	93 7/16" (2373)	23 15/16" (608)	95 1/2" (2426)	25" (635)	96" (2438)	13.11 (1.22)	18 7/8" (479)	20 13/16" (529)	90 11/16" (2303)	7.09 (0.66)	16.31 (1.52)	18.81 (1.75)
2780	1	48" (1219)	93 1/8" (2365)	29 15/16" (760)	95 1/2" (2426)	31" (787)	96" (2438)	16.82 (1.56)	24 7/8" (632)	26 13/16" (681)	90 5/16" (2294)	10.38 (0.96)	20.63 (1.92)	23.25 (2.16)
2980	1	48" (1219)	92 3/4" (2356)	31 15/16" (811)	95 1/2" (2426)	33" (838)	96" (2438)	18.01 (1.67)	26 7/8" (683)	28 13/16" (732)	90" (2286)	11.47 (1.07)	22.06 (2.05)	24.71 (2.30)
3180	1	48" (1219)	92" (2337)	35 15/16" (913)	95 1/2" (2426)	37" (940)	96" (2438)	20.35 (1.89)	30 7/8" (784)	32 13/16" (833)	89 5/16" (2269)	13.63 (1.27)	24.89 (2.31)	27.62 (2.57)
3380	1	48" (1219)	91 5/8" (2327)	37 15/16" (964)	95 1/2" (2426)	39" (991)	96" (2438)	21.73 (2.02)	32 7/8" (835)	34 13/16" (884)	89 7/8" (2283)	14.71 (1.37)	28.38 (2.64)	31.20 (2.90)
4068	2	48" (1219)	73 5/16" (1862)	47 1/4" (1200)	79 1/2" (2019)	48" (1219)	80" (2032)	21.56 (2.00)	39 15/16" (1014)	43 13/16" (1113)	70 7/8" (1800)	10.93 (1.02)	25.61 (2.38)	28.07 (2.61)
4068	1	48" (1219)	73 5/16" (1862)	47 1/4" (1200)	79 1/2" (2019)	48" (1219)	80" (2032)	10.27 (0.95)	18 15/16" (481)	20 7/8" (530)	70 7/8" (1800)	10.93 (1.02)	12.22 (1.14)	28.07 (2.61)
5068	2	96" (2438)	74 13/16" (1900)	59 1/4" (1505)	79 1/2" (2019)	60" (1524)	80" (2032)	27.95 (2.60)	51 15/16" (1319)	55 13/16" (1418)	72 1/8" (1832)	16.30 (1.51)	32.24 (3.00)	34.97 (3.25)
5068	1	96" (2438)	74 13/16" (1900)	59 1/4" (1505)	79 1/2" (2019)	60" (1524)	80" (2032)	13.46 (1.25)	24 15/16" (633)	26 7/8" (683)	72 1/8" (1832)	16.30 (1.51)	15.54 (1.44)	34.97 (3.25)
5468	2	96" (2438)	74 1/8" (1883)	63 1/4" (1607)	79 1/2" (2019)	64" (1626)	80" (2032)	29.70 (2.76)	55 15/16" (1421)	59 13/16" (1519)	71 1/2" (1816)	17.97 (1.67)	34.29 (3.19)	37.09 (3.45)
5468	1	96" (2438)	74 1/8" (1883)	63 1/4" (1607)	79 1/2" (2019)	64" (1626)	80" (2032)	14.34 (1.33)	26 15/16" (684)	28 7/8" (733)	71 1/2" (1816)	17.97 (1.67)	16.56 (1.54)	37.09 (3.45)
6068	2	96" (2438)	72 5/8" (1845)	71 1/4" (1810)	79 1/2" (2019)	72" (1829)	80" (2032)	32.99 (3.06)	63 15/16" (1624)	67 13/16" (1722)	70 1/16" (1780)	21.25 (1.97)	38.33 (3.56)	41.27 (3.83)
6068	1	96" (2438)	72 5/8" (1845)	71 1/4" (1810)	79 1/2" (2019)	72" (1829)	80" (2032)	16.00 (1.49)	30 15/16" (786)	32 7/8" (835)	70 1/16" (1780)	21.25 (1.97)	18.58 (1.73)	41.27 (3.83)
6468	2	96" (2438)	71 13/16" (1824)	75 1/4" (1911)	79 1/2" (2019)	76" (1930)	80" (2032)	34.53 (3.21)	67 15/16" (1726)	71 13/16" (1824)	69 1/4" (1759)	22.86 (2.12)	44.22 (4.11)	47.36 (4.40)
6468	1	96" (2438)	71 13/16" (1824)	75 1/4" (1911)	79 1/2" (2019)	76" (1930)	80" (2032)	16.77 (1.56)	32 15/16" (837)	34 7/8" (886)	69 1/4" (1759)	22.86 (2.12)	21.53 (2.00)	47.36 (4.40)
40611	2	48" (1219)	76 3/16" (1935)	47 1/4" (1200)	82 3/8" (2092)	48" (1219)	83" (2108)	22.44 (2.08)	39 15/16" (1014)	43 13/16" (1113)	73 3/4" (1873)	11.46 (1.06)	29.64 (2.75)	32.34 (3.00)
40611	1	48" (1219)	76 3/16" (1935)	47 1/4" (1200)	82 3/8" (2092)	48" (1219)	83" (2108)	10.69 (0.99)	18 15/16" (481)	20 7/8" (530)	73 3/4" (1873)	11.46 (1.06)	14.29 (1.33)	32.34 (3.00)
50611	2	96" (2438)	77 11/16" (1973)	59 1/4" (1505)	82 3/8" (2092)	60" (1524)	83" (2108)	29.07 (2.70)	51 15/16" (1319)	55 13/16" (1418)	75" (1905)	17.09 (1.59)	37.35 (3.47)	40.32 (3.75)
50611	1	96" (2438)	77 11/16" (1973)	59 1/4" (1505)	82 3/8" (2092)	60" (1524)	83" (2108)	14.00 (1.30)	24 15/16" (633)	26 7/8" (683)	75" (1905)	17.09 (1.59)	18.15 (1.69)	40.32 (3.75)
54611	2	96" (2438)	77" (1956)	63 1/4" (1607)	82 3/8" (2092)	64" (1626)	83" (2108)	30.89 (2.87)	55 15/16" (1421)	59 13/16" (1519)	74 3/8" (1889)	18.84 (1.75)	39.77 (3.69)	42.80 (3.98)
54611	1	96" (2438)	77" (1956)	63 1/4" (1607)	82 3/8" (2092)	64" (1626)	83" (2108)	14.91 (1.39)	26 15/16" (684)	28 7/8" (733)	74 3/8" (1889)	18.84 (1.75)	19.35 (1.80)	42.80 (3.98)
60611	2	96" (2438)	75 1/2" (1918)	71 1/4" (1810)	82 3/8" (2092)	72" (1829)	83" (2108)	34.35 (3.19)	63 15/16" (1624)	67 13/16" (1722)	72 15/16" (1853)	22.28 (2.07)	44.53 (4.14)	47.71 (4.43)
60611	1	96" (2438)	75 1/2" (1918)	71 1/4" (1810)	82 3/8" (2092)	72" (1829)	83" (2108)	16.65 (1.55)	30 15/16" (786)	32 7/8" (835)	72 15/16" (1853)	22.28 (2.07)	21.74 (2.02)	47.71 (4.43)
64611	2	96" (2438)	74 11/16" (1897)	75 1/4" (1911)	82 3/8" (2092)	76" (1930)	83" (2108)	35.97 (3.34)	67 15/16" (1726)	71 13/16" (1824)	72 1/8" (1832)	23.98 (2.23)	50.78 (4.72)	54.16 (5.03)
64611	1	96" (2438)	74 11/16" (1897)	75 1/4" (1911)	82 3/8" (2092)	76" (1930)	83" (2108)	17.47 (1.62)	32 15/16" (837)	34 7/8" (886)	72 1/8" (1832)	23.98 (2.23)	25.22 (2.34)	54.16 (5.03)
4080	2	48" (1219)	89 5/16" (2269)	47 1/4" (1200)	95 1/2" (2426)	48" (1219)	96" (2438)	26.43 (2.46)	39 15/16" (1014)	43 13/16" (1113)	86 7/8" (2207)	13.76 (1.28)	33.66 (3.13)	36.60 (3.40)
4080	1	48" (1219)	89 5/16" (2269)	47 1/4" (1200)	95 1/2" (2426)	48" (1219)	96" (2438)	12.59 (1.17)	18 15/16" (481)	20 7/8" (530)	86 7/8" (2207)	13.76 (1.28)	14.29 (1.33)	36.60 (3.40)
5080	2	96" (2438)	90 13/16" (2307)	59 1/4" (1505)	95 1/2" (2426)	60" (1524)	96" (2438)	34.16 (3.17)	51 15/16" (1319)	55 13/16" (1418)	88 1/8" (2238)	20.50 (1.90)	42.47 (3.95)	45.67 (4.24)
5080	1	96" (2438)	90 13/16" (2307)	59 1/4" (1505)	95 1/2" (2426)	60" (1524)	96" (2438)	16.45 (1.53)	24 15/16" (633)	26 7/8" (683)	88 1/8" (2238)	20.50 (1.90)	18.15 (1.69)	45.67 (4.24)
5480	2	96" (2438)	90 1/8" (2289)	63 1/4" (1607)	95 1/2" (2426)	64" (1626)	96" (2438)	36.34 (3.38)	55 15/16" (1421)	59 13/16" (1519)	87 1/2" (2223)	22.61 (2.10)	45.24 (4.20)	48.51 (4.51)
5480	1	96" (2438)	90 1/8" (2289)	63 1/4" (1607)	95 1/2" (2426)	64" (1626)	96" (2438)	17.55 (1.63)	26 15/16" (684)	28 7/8" (733)	87 1/2" (2223)	22.61 (2.10)	19.35 (1.80)	48.51 (4.51)
6080	2	96" (2438)	88 5/8" (2251)	71 1/4" (1810)	95 1/2" (2426)	72" (1829)	96" (2438)	40.53 (3.77)	63 15/16" (1624)	67 13/16" (1722)	86 1/16" (2186)	26.78 (2.49)	50.73 (4.71)	54.14 (5.03)
6080	1	96" (2438)	88 5/8" (2251)	71 1/4" (1810)	95 1/2" (2426)	72" (1829)	96" (2438)	19.65 (1.83)	30 15/16" (786)	32 7/8" (835)	86 1/16" (2186)	26.78 (2.49)	21.74 (2.02)	54.14 (5.03)
6480	2	96" (2438)	87 13/16" (2230)	75 1/4" (1911)	95 1/2" (2426)	76" (1930)	96" (2438)	42.51 (3.95)	67 15/16" (1726)	71 13/16" (1824)	85 1/4" (2165)	28.83 (2.68)	57.33 (5.33)	60.95 (5.66)
6480	1	96" (2438)	87 13/16" (2230)	75 1/4" (1911)	95 1/2" (2426)	76" (1930)	96" (2438)	20.65 (1.92)	32 15/16" (837)	34 7/8" (886)	85 1/4" (2165)	28.83 (2.68)	25.22 (2.34)	60.95 (5.66)

• "Door Dimension" always refers to outside frame-to-frame dimension.
• "**Minimum Rough Opening**" **dimensions may need to be increased to allow for use of building wraps, flashing, sill panning, brackets, fasteners or other items. See pages 226-227 for more details.**
• Dimensions in parentheses are in millimeters or square meters.
*For two-panel patio doors with one panel open, clear opening is based on active panel being open and passive panel being closed.

COMPLEMENTARY CURVED TOP PATIO DOORS

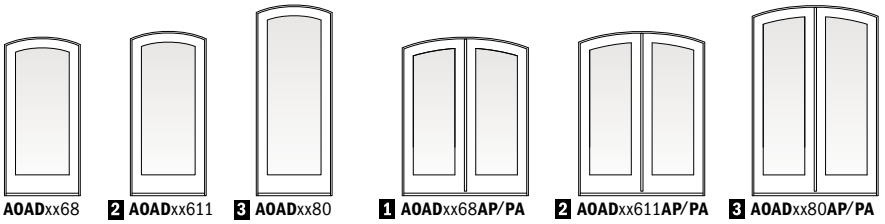

1 AOADxx68 **2 AOAD**xx611 **3 AOAD**xx80 **1 AOAD**xx68**AP/PA** **2 AOAD**xx611**AP/PA** **3 AOAD**xx80**AP/PA**

Custom-size doors are available in 1/8" (3) increments. Traditional panels are standard. Custom-designed and 3/4-light panels are also available. Stationary doors are also available (i.e., 2168**S** or 4068**SS**). Add **AOAD** to "Door Number" listed in table (i.e., **AOAD**2168).

Complementary Arch Hinged Outswing Patio Door Dimensions and Specifications

Door Number	Number of Panels Open*	Door Dimensions				Min. Rough Opening		Clear Opening Area Sq. Ft./(m²)	Clear Opening Maximums			Glass Area Sq. Ft./(m²)	Vent Area Sq. Ft./(m²)	Overall Door Area Sq. Ft./(m²)
		Radius Inches/(mm)	Side Height Inches/(mm)	Width Inches/(mm)	Height Inches/(mm)	Width Inches/(mm)	Height Inches/(mm)		90° Open Position Width Inches/(mm)	Full Open Position Width Inches/(mm)	Height Inches/(mm)			
2168	1	36" (914)	77 7/16" (1967)	23 15/16" (608)	79 1/2" (2019)	25" (635)	80" (2032)	11.06 (1.03)	19 3/8" (492)	21 5/16" (541)	74 3/4" (1899)	5.66 (0.53)	12.46 (1.16)	14.49 (1.35)
2768	1	48" (1219)	77 1/8" (1959)	29 15/16" (760)	79 1/2" (2019)	31" (787)	80" (2032)	14.11 (1.31)	25 3/8" (645)	27 5/16" (694)	74 3/8" (1889)	8.28 (0.77)	15.70 (1.46)	17.85 (1.66)
2968	1	48" (1219)	76 3/4" (1949)	31 15/16" (811)	79 1/2" (2019)	33" (838)	80" (2032)	15.08 (1.40)	27 3/8" (695)	29 5/16" (745)	74 1/16" (1881)	9.15 (0.85)	16.77 (1.56)	18.95 (1.76)
3168	1	48" (1219)	76" (1930)	35 15/16" (913)	79 1/2" (2019)	37" (940)	80" (2032)	16.97 (1.58)	31 3/8" (797)	33 5/16" (846)	73 3/8" (1864)	10.87 (1.01)	18.88 (1.75)	21.13 (1.96)
3368	1	48" (1219)	75 5/8" (1921)	37 15/16" (964)	79 1/2" (2019)	39" (991)	80" (2032)	17.90 (1.66)	33 3/8" (848)	35 5/16" (897)	73" (1854)	11.72 (1.09)	22.01 (2.04)	24.36 (2.26)
21611	1	36" (914)	80 5/16" (2040)	23 15/16" (608)	82 3/8" (2092)	25" (635)	83" (2108)	11.49 (1.07)	19 3/8" (492)	21 5/16" (541)	77 5/8" (1972)	5.93 (0.55)	14.39 (1.34)	16.65 (1.55)
27611	1	48" (1219)	80" (2032)	29 15/16" (760)	82 3/8" (2092)	31" (787)	83" (2108)	14.65 (1.36)	25 3/8" (645)	27 5/16" (694)	77 1/4" (1962)	8.68 (0.81)	18.17 (1.69)	20.55 (1.91)
29611	1	48" (1219)	79 5/8" (2022)	31 15/16" (811)	82 3/8" (2092)	33" (838)	83" (2108)	15.66 (1.45)	27 3/8" (695)	29 5/16" (745)	76 15/16" (1954)	9.58 (0.89)	19.41 (1.80)	21.83 (2.03)
31611	1	48" (1219)	78 7/8" (2003)	35 15/16" (913)	82 3/8" (2092)	37" (940)	83" (2108)	17.64 (1.64)	31 3/8" (797)	33 5/16" (846)	76 1/4" (1937)	11.39 (1.06)	21.89 (2.03)	24.37 (2.26)
33611	1	48" (1219)	78 1/2" (1994)	37 15/16" (964)	82 3/8" (2092)	39" (991)	83" (2108)	18.61 (1.73)	33 3/8" (848)	35 5/16" (897)	75 7/8" (1927)	12.28 (1.14)	25.19 (2.34)	27.78 (2.58)
2180	1	36" (914)	93 7/16" (2373)	23 15/16" (608)	95 1/2" (2426)	25" (635)	96" (2438)	13.43 (1.25)	19 3/8" (492)	21 5/16" (541)	90 3/4" (2305)	7.09 (0.66)	16.31 (1.52)	18.81 (1.75)
2780	1	48" (1219)	93 1/8" (2365)	29 15/16" (760)	95 1/2" (2426)	31" (787)	96" (2438)	17.14 (1.59)	25 3/8" (645)	27 5/16" (694)	90 3/8" (2296)	10.38 (0.96)	20.63 (1.92)	23.25 (2.16)
2980	1	48" (1219)	92 3/4" (2356)	31 15/16" (811)	95 1/2" (2426)	33" (838)	96" (2438)	18.33 (1.70)	27 3/8" (695)	29 5/16" (745)	90 1/16" (2288)	11.47 (1.07)	22.06 (2.05)	24.71 (2.30)
3180	1	48" (1219)	92" (2337)	35 15/16" (913)	95 1/2" (2426)	37" (940)	96" (2438)	20.68 (1.92)	31 3/8" (797)	33 5/16" (846)	89 3/8" (2270)	13.63 (1.27)	24.89 (2.31)	27.62 (2.57)
3380	1	48" (1219)	91 5/8" (2327)	37 15/16" (964)	95 1/2" (2426)	39" (991)	96" (2438)	21.83 (2.03)	33 3/8" (848)	35 5/16" (897)	89" (2261)	14.71 (1.37)	28.38 (2.64)	31.20 (2.90)
4068	2	48" (1219)	73 5/16" (1862)	47 1/4" (1200)	79 1/2" (2019)	48" (1219)	80" (2032)	21.93 (2.04)	40 11/16" (1033)	44 5/8" (1133)	70 3/4" (1797)	10.93 (1.02)	25.61 (2.38)	28.07 (2.61)
4068	1	48" (1219)	73 5/16" (1862)	47 1/4" (1200)	79 1/2" (2019)	48" (1219)	80" (2032)	10.44 (0.97)	19 1/4" (489)	21 1/4" (540)	70 3/4" (1797)	10.93 (1.02)	12.22 (1.14)	28.07 (2.61)
5068	2	96" (2438)	74 13/16" (1900)	59 1/4" (1505)	79 1/2" (2019)	60" (1524)	80" (2032)	28.36 (2.63)	52 11/16" (1338)	56 5/8" (1438)	72 1/8" (1832)	16.30 (1.51)	32.24 (3.00)	34.97 (3.25)
5068	1	96" (2438)	74 13/16" (1900)	59 1/4" (1505)	79 1/2" (2019)	60" (1524)	80" (2032)	13.65 (1.27)	25 1/4" (641)	27 1/4" (692)	72 1/8" (1832)	16.30 (1.51)	15.54 (1.44)	34.97 (3.25)
5468	2	96" (2438)	74 1/8" (1883)	63 1/4" (1607)	79 1/2" (2019)	64" (1626)	80" (2032)	30.08 (2.79)	56 11/16" (1440)	60 5/8" (1540)	71 7/16" (1815)	17.97 (1.67)	34.29 (3.19)	37.09 (3.45)
5468	1	96" (2438)	74 1/8" (1883)	63 1/4" (1607)	79 1/2" (2019)	64" (1626)	80" (2032)	14.51 (1.35)	27 1/4" (692)	29 1/4" (743)	71 7/16" (1815)	17.97 (1.67)	16.56 (1.54)	37.09 (3.45)
6068	2	96" (2438)	72 5/8" (1845)	71 1/4" (1810)	79 1/2" (2019)	72" (1829)	80" (2032)	33.36 (3.10)	64 11/16" (1643)	68 5/8" (1743)	70" (1778)	21.25 (1.97)	38.33 (3.56)	41.27 (3.83)
6068	1	96" (2438)	72 5/8" (1845)	71 1/4" (1810)	79 1/2" (2019)	72" (1829)	80" (2032)	16.16 (1.50)	31 1/4" (794)	33 1/4" (845)	70" (1778)	21.25 (1.97)	18.58 (1.73)	41.27 (3.83)
6468	2	96" (2438)	71 13/16" (1824)	75 1/4" (1911)	79 1/2" (2019)	76" (1930)	80" (2032)	34.89 (3.24)	68 11/16" (1745)	72 5/8" (1845)	69 3/16" (1757)	22.86 (2.12)	44.22 (4.11)	47.36 (4.40)
6468	1	96" (2438)	71 13/16" (1824)	75 1/4" (1911)	79 1/2" (2019)	76" (1930)	80" (2032)	16.94 (1.57)	33 1/4" (845)	35 1/4" (895)	69 3/16" (1757)	22.86 (2.12)	21.53 (2.00)	47.36 (4.40)
40611	2	48" (1219)	76 3/16" (1935)	47 1/4" (1200)	82 3/8" (2092)	48" (1219)	83" (2108)	22.82 (2.12)	40 11/16" (1033)	44 5/8" (1133)	73 5/8" (1870)	11.46 (1.06)	29.64 (2.75)	32.34 (3.00)
40611	1	48" (1219)	76 3/16" (1935)	47 1/4" (1200)	82 3/8" (2092)	48" (1219)	83" (2108)	10.86 (1.01)	19 1/4" (489)	21 1/4" (540)	73 5/8" (1870)	11.46 (1.06)	14.29 (1.33)	32.34 (3.00)
50611	2	96" (2438)	77 11/16" (1973)	59 1/4" (1505)	82 3/8" (2092)	60" (1524)	83" (2108)	29.49 (2.74)	52 11/16" (1338)	56 5/8" (1438)	75" (1905)	17.09 (1.59)	37.35 (3.47)	40.32 (3.75)
50611	1	96" (2438)	77 11/16" (1973)	59 1/4" (1505)	82 3/8" (2092)	60" (1524)	83" (2108)	14.19 (1.32)	25 1/4" (641)	27 1/4" (692)	75" (1905)	17.09 (1.59)	18.15 (1.69)	40.32 (3.75)
54611	2	96" (2438)	77" (1956)	63 1/4" (1607)	82 3/8" (2092)	64" (1626)	83" (2108)	31.29 (2.91)	56 11/16" (1440)	60 5/8" (1540)	74 5/16" (1888)	18.84 (1.75)	39.77 (3.69)	42.80 (3.98)
54611	1	96" (2438)	77" (1956)	63 1/4" (1607)	82 3/8" (2092)	64" (1626)	83" (2108)	15.09 (1.40)	27 1/4" (692)	29 1/4" (743)	74 5/16" (1888)	18.84 (1.75)	19.35 (1.80)	42.80 (3.98)
60611	2	96" (2438)	75 1/2" (1918)	71 1/4" (1810)	82 3/8" (2092)	72" (1829)	83" (2108)	34.73 (3.23)	64 11/16" (1643)	68 5/8" (1743)	72 7/8" (1851)	22.28 (2.07)	44.53 (4.14)	47.71 (4.43)
60611	1	96" (2438)	75 1/2" (1918)	71 1/4" (1810)	82 3/8" (2092)	72" (1829)	83" (2108)	16.83 (1.56)	31 1/4" (794)	33 1/4" (845)	72 7/8" (1851)	22.28 (2.07)	21.74 (2.02)	47.71 (4.43)
64611	2	96" (2438)	74 11/16" (1897)	75 1/4" (1911)	82 3/8" (2092)	76" (1930)	83" (2108)	36.34 (3.38)	68 11/16" (1745)	72 5/8" (1845)	72 1/16" (1830)	23.98 (2.23)	50.78 (4.72)	54.16 (5.03)
64611	1	96" (2438)	74 11/16" (1897)	75 1/4" (1911)	82 3/8" (2092)	76" (1930)	83" (2108)	17.64 (1.64)	33 1/4" (845)	35 1/4" (895)	72 1/16" (1830)	23.98 (2.23)	25.22 (2.34)	54.16 (5.03)
4080	2	48" (1219)	89 5/16" (2269)	47 1/4" (1200)	95 1/2" (2426)	48" (1219)	96" (2438)	26.88 (2.50)	40 11/16" (1033)	44 5/8" (1133)	86 3/4" (2203)	13.76 (1.28)	33.66 (3.13)	36.60 (3.40)
4080	1	48" (1219)	89 5/16" (2269)	47 1/4" (1200)	95 1/2" (2426)	48" (1219)	96" (2438)	12.80 (1.19)	19 1/4" (489)	21 1/4" (540)	86 3/4" (2203)	13.76 (1.28)	14.29 (1.33)	36.60 (3.40)
5080	2	96" (2438)	90 13/16" (2307)	59 1/4" (1505)	95 1/2" (2426)	60" (1524)	96" (2438)	34.65 (3.22)	52 11/16" (1338)	56 5/8" (1438)	88 1/8" (2238)	20.50 (1.90)	42.47 (3.95)	45.67 (4.24)
5080	1	96" (2438)	90 13/16" (2307)	59 1/4" (1505)	95 1/2" (2426)	60" (1524)	96" (2438)	16.68 (1.55)	25 1/4" (641)	27 1/4" (692)	88 1/8" (2238)	20.50 (1.90)	18.15 (1.69)	45.67 (4.24)
5480	2	96" (2438)	90 1/8" (2289)	63 1/4" (1607)	95 1/2" (2426)	64" (1626)	96" (2438)	36.81 (3.42)	56 11/16" (1440)	60 5/8" (1540)	87 7/16" (2221)	22.61 (2.10)	45.24 (4.20)	48.51 (4.51)
5480	1	96" (2438)	90 1/8" (2289)	63 1/4" (1607)	95 1/2" (2426)	64" (1626)	96" (2438)	17.76 (1.65)	27 1/4" (692)	29 1/4" (743)	87 7/16" (2221)	22.61 (2.10)	19.35 (1.80)	48.51 (4.51)
6080	2	96" (2438)	88 5/8" (2251)	71 1/4" (1810)	95 1/2" (2426)	72" (1829)	96" (2438)	40.98 (3.81)	64 11/16" (1643)	68 5/8" (1743)	86" (2184)	26.78 (2.49)	50.73 (4.71)	54.14 (5.03)
6080	1	96" (2438)	88 5/8" (2251)	71 1/4" (1810)	95 1/2" (2426)	72" (1829)	96" (2438)	19.86 (1.84)	31 1/4" (794)	33 1/4" (845)	86" (2184)	26.78 (2.49)	21.74 (2.02)	54.14 (5.03)
6480	2	96" (2438)	87 13/16" (2230)	75 1/4" (1911)	95 1/2" (2426)	76" (1930)	96" (2438)	42.96 (3.99)	68 11/16" (1745)	72 5/8" (1845)	85 3/16" (2164)	28.83 (2.68)	57.33 (5.33)	60.95 (5.66)
6480	1	96" (2438)	87 13/16" (2230)	75 1/4" (1911)	95 1/2" (2426)	76" (1930)	96" (2438)	20.85 (1.94)	33 1/4" (845)	35 1/4" (895)	85 3/16" (2164)	28.83 (2.68)	25.22 (2.34)	60.95 (5.66)

• "Door Dimension" always refers to outside frame-to-frame dimension.
• "**Minimum Rough Opening**" **dimensions may need to be increased to allow for use of building wraps, flashing, sill panning, brackets, fasteners or other items. See pages 226-227 for more details.**
• Dimensions in parentheses are in millimeters or square meters.
*For two-panel patio doors with one panel open, clear opening is based on active panel being open and passive panel being closed.

Complementary Arch Patio Door Sidelights

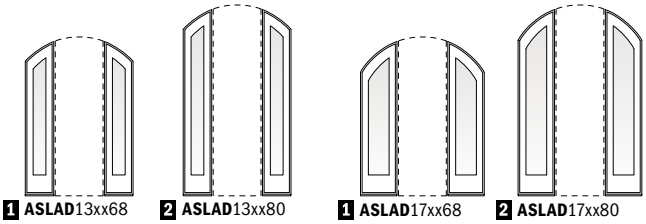

1 **ASLAD**13xx68 2 **ASLAD**13xx80 1 **ASLAD**17xx68 2 **ASLAD**17xx80

Custom sized in 1/8" (3) increments.

Standard sizes in two widths and heights. Contact your Andersen supplier for sidelight dimensions and specifications. Sash-set arch patio door sidelights, shown, are standard. Direct-set sidelights are available by special order.

Order Designation Description

Viewed from the exterior.

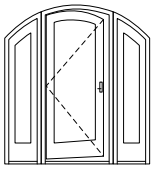

17 AHIAD 3168 A L

- 17: Flanking Unit Width
- AHIAD: Andersen® Arch Hinged Inswing Door
- 3168: Door Rough Opg.
- A: Active Panel
- L: Left Hinged

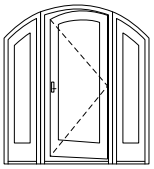

17 AHIAD 3168 A R

- 17: Flanking Unit Width
- AHIAD: Andersen Arch Hinged Inswing Door
- 3168: Door Rough Opg.
- A: Active Panel
- R: Right Hinged

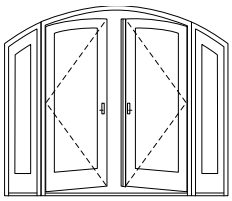

17 AHIAD 6480 A P L R

- 17: Flanking Unit Width
- AHIAD: Andersen Arch Hinged Inswing Door
- 6480: Door Rough Opg.
- A: Active Panel
- P: Passive Panel
- L: Left Hinged
- R: Right Hinged

Arch inswing patio doors (**AHIAD**) shown above; for arch outswing patio doors use **AOAD**. Outswing patio doors open outward to the exterior.

Complementary Arch Patio Door Sidelight Details

Scale 1 1/2" (38) = 1'-0" (305) – 1:8

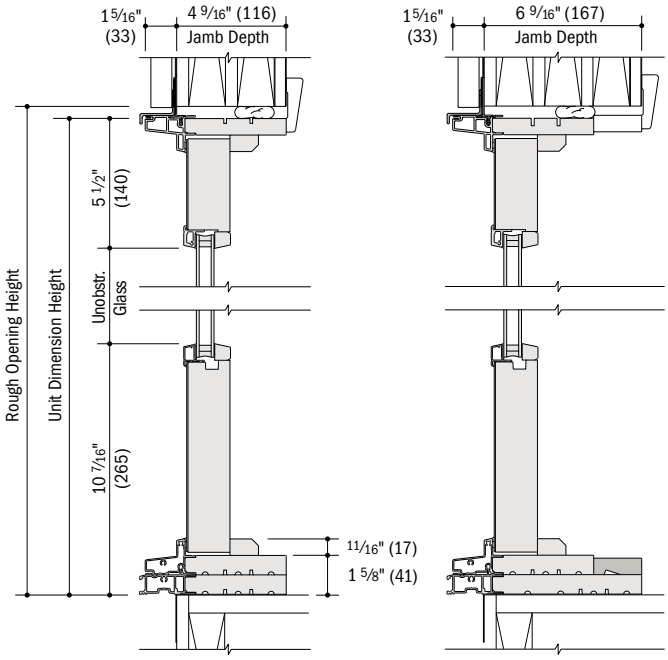

Vertical Sections

Vertical Joining Details

Scale 1 1/2" (38) = 1'-0" (305) – 1:8

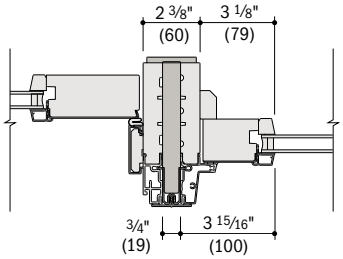

Complementary Arch Inswing Patio Door to Complementary Arch Patio Door Sidelight
4 9/16" (116) Base Jamb Depth

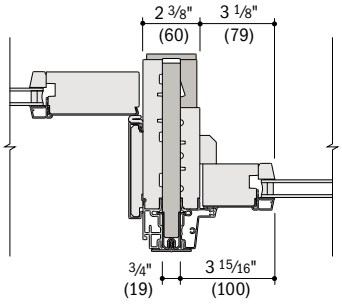

Complementary Arch Inswing Patio Door to Complementary Arch Patio Door Sidelight
6 9/16" (167) Base Jamb Depth

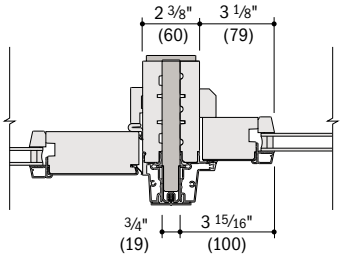

Complementary Arch Outswing Patio Door to Complementary Arch Patio Door Sidelight

- 4 9/16" (116) and 6 9/16" (167) overall jamb depth measurements are from back side of installation flange.
- Light-colored areas are parts included with window and/or door. Dark-colored areas are additional Andersen® parts required to complete window and/or door assembly as shown.
- **Minimum rough openings may need to be increased to allow for use of building wraps, flashing, sill panning, brackets, fasteners or other items. See installation information on pages 226-227.**
- Details are for illustration only and are not intended to represent product installation methods or materials. Refer to product installation guides at andersenwindows.com.
- Dimensions in parentheses are in millimeters.

COMPLEMENTARY CURVED TOP PATIO DOORS

Complementary Arch Hinged Inswing Patio Door Details – 4 9/16" (116) Base Jamb Depth

Scale 1 1/2" (38) = 1'-0" (305) – 1:8

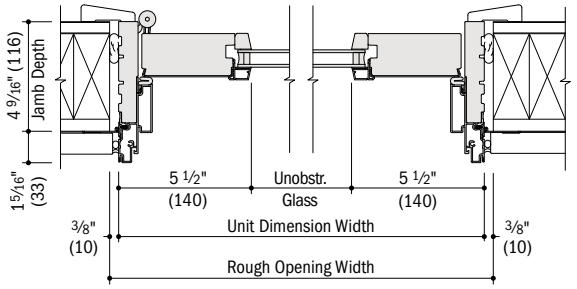

Horizontal Section

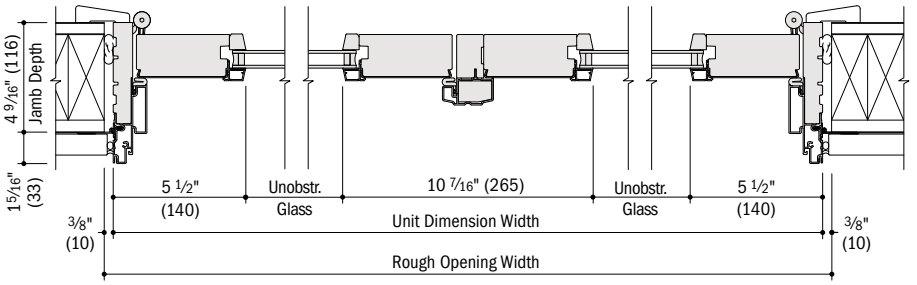

Horizontal Section

Two-Panel

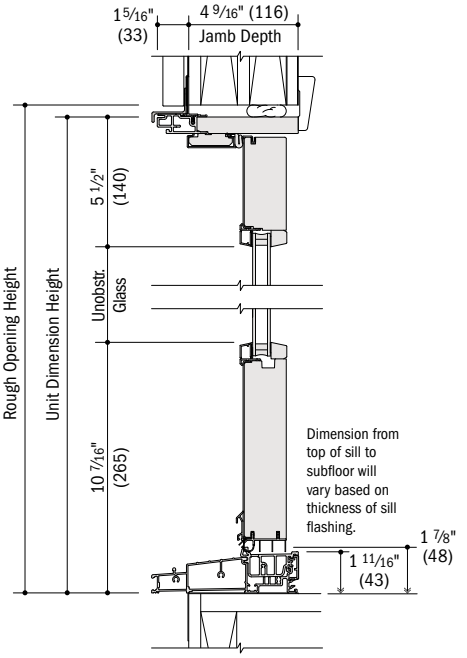

Vertical Section

Complementary Arch Hinged Inswing Patio Door Details – 6 9/16" (167) Base Jamb Depth

Scale 1 1/2" (38) = 1'-0" (305) – 1:8

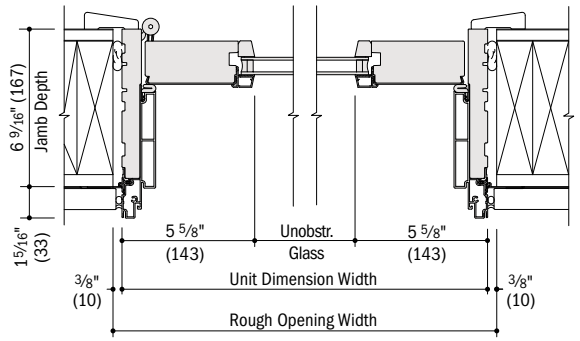

Horizontal Section

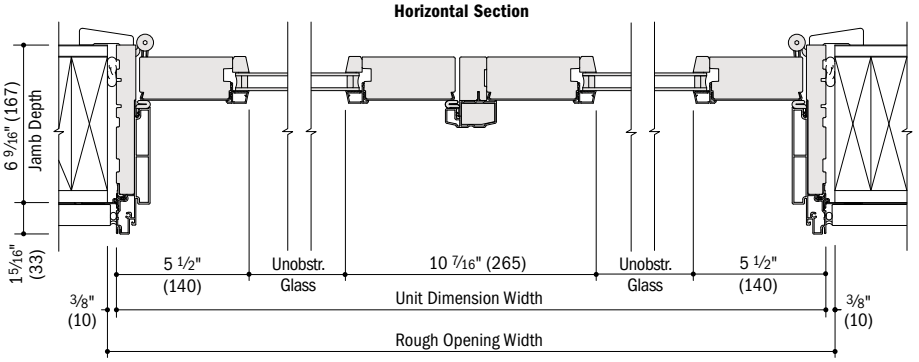

Horizontal Section

Two-Panel

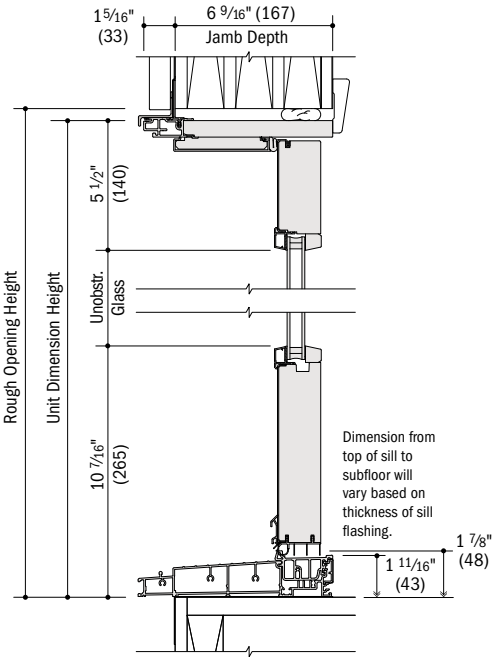

Vertical Section

- 4 9/16" (116) and 6 9/16" (167) overall jamb depth measurements are from back side of installation flange.
- Light-colored areas are parts included with door. Dark-colored areas are additional Andersen® parts required to complete door assembly as shown.
- **Minimum rough openings may need to be increased to allow for use of building wraps, flashing, sill panning, brackets, fasteners or other items. See installation information on pages 226-227.**
- Details are for illustration only and are not intended to represent product installation methods or materials. Refer to product installation guides at andersenwindows.com.
- Dimensions in parentheses are in millimeters.

Complementary Arch Hinged Outswing Patio Door Details

Scale 1 1/2" (38) = 1'-0" (305) – 1:8

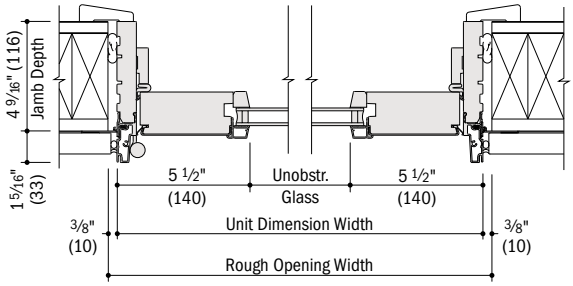

Horizontal Section

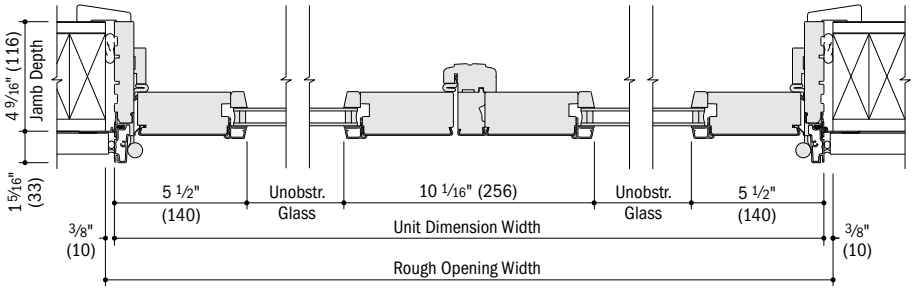

Horizontal Section

Two-Panel

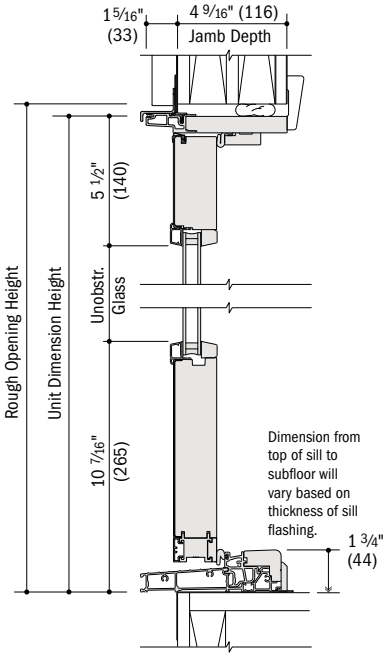

Vertical Section

- 4 9/16" (116) overall jamb depth measurement is from back side of installation flange.
- Light-colored areas are parts included with door. Dark-colored areas are additional Andersen® parts required to complete door assembly as shown.
- **Minimum rough openings may need to be increased to allow for use of building wraps, flashing, sill panning, brackets, fasteners or other items. See installation information on pages 226-227.**
- Details are for illustration only and are not intended to represent product installation methods or materials. Refer to product installation guides at andersenwindows.com.
- Dimensions in parentheses are in millimeters.

NOTES

EXTERIOR TRIM

Flat Casing 192
Brick Mould 193
Sill Nose 193
Decorative Drip Cap 194
Cornices 194
Mull Cover 194

CUSTOM SIZING
in ⅛" (3) increments

Dimensions in parentheses are in millimeters.

FEATURES

EXTERIOR TRIM SYSTEM

Easier Installation

- Installs independently of water management system
- No nail holes to fill
- No visible fasteners
- No painting

ENGINEERED WITH FIBREX®

Made of Fibrex® material that is an environmentally smart composite, containing 40% pre-consumer reclaimed wood fiber by weight.

ANDERSEN INNOVATION

EXTERIOR TRIM

A For exceptional long-lasting* performance, exterior trim is made from Fibrex material or high-density urethane with low-maintenance exterior finishes.

B Sill nose profile, made from Fibrex material, is placed at the sill for a traditional look.

C Trim is securely fastened to the home using factory-applied trim flange or field applied attachment strips.

D Trim surrounds are assembled with corner keys and stainless steel fasteners for stability and strength.

Profiles

Exterior trim is available in four profiles made from our Fibrex material. Profiles include 3 ½" (89) flat casing, 4 ½" (114) flat casing, 2" (51) brick mould and a sill nose for the bottom trim piece. See profiles and sill options on the next page.

Thick trim profiles overlap the window frame to create clean lines without visible sealant joints.

Drip Cap

Full-length, color-matched aluminum drip cap is included with kits and surrounds.

End Caps

Provide a clean appearance when joining two trim members.

Corner Keys

Provide tight alignment of corner joints.

Fasteners

Screws are made of high-quality stainless steel and provide corner joints with a secure, tight fit.

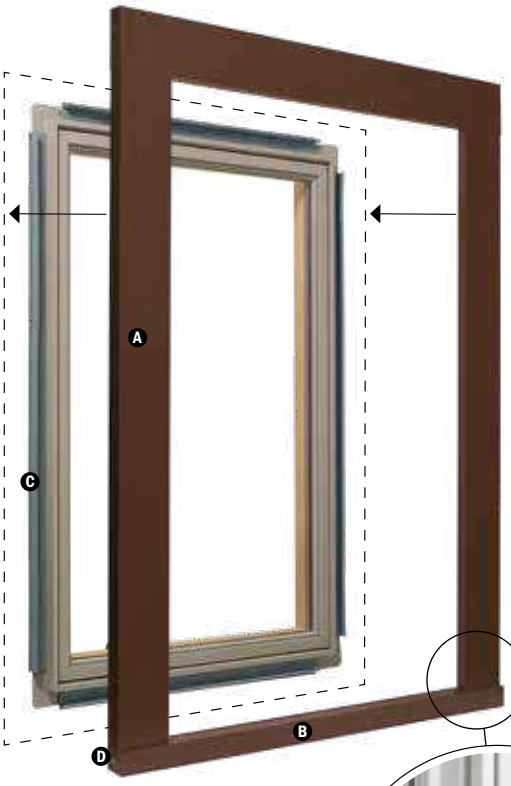

Cocoa bean trim with Sandtone window shown above. White trim with white window in detail shown at right.

Design a window and view exterior trim installation guides at **andersenwindows.com/exteriortrim**.

EXTERIOR TRIM COLORS

Head Trim Options

Three styles are available. All can be used above our flat casing and include an integrated installation flange. The decorative drip cap is made from our Fibrex material. Both the 2" (51) cornice and 3 ⅝" (92) cornice are made from highly durable urethane material. See head options on the next page.

Specialty Trim

Made of highly durable factory-finished urethane material for selected shapes. Contact your Andersen supplier for availability.

INSTALLATION OPTIONS

Preassembled Trim Surrounds

Factory-assembled surrounds install in seconds on A-Series windows with optional factory-applied exterior trim flange.

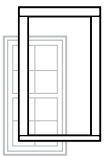

Precut Kits

Knock-down kits include precut and predrilled trim with all the necessary components for on-site assembly for windows and patio doors up to 12' (3658) in width or height.

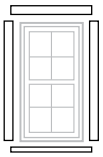

Individual Trim Components

13' (3962) factory-finished trim lineals, end caps, corner keys, fasteners, metal drip caps and field attachment strips allow for field fabrication and assembly.

*See the A-Series Limited Warranty for exterior trim applied to A-Series products. Visit andersenwindows.com/warranty for details.

Dimensions in parentheses are in millimeters.

Printing limitations prevent exact duplication of colors. See your Andersen supplier for actual color samples.

PROFILES

2" (51) Brick Mould in canvas with Sandtone window

3 ½" (89) or 4 ½" (114) Flat Casing in red rock with Sandtone window

3 ½" (89) or 4 ½" (114) Flat Casing in Terratone with Sandtone window

HEAD OPTIONS

Decorative Drip Cap over flat casing in forest green with Sandtone window

2" (51) Cornice over flat casing in prairie grass with Sandtone window

3 ⅝" (92) Cornice over flat casing in white with Sandtone window

SILL OPTIONS

Sill nose and brick mould in Terratone with white window

Sill nose and flat casing in Terratone with red rock window

3 ½" (89) or 4 ½" (114) Flat Casing in white with white window

ACCESSORIES

INSTALLATION

Fibrex® Trim Board

Available in the same 11 colors as our exterior trim, this solid cellular Fibrex trim board can be cut or ripped to size, and can be fastened using nails or screws. 3 ½" (89) x ¾" (19) thick in 10' (3048) lengths.

Coil Stock

Andersen aluminum coil stock allows you to form your own profiles in the field and can be ordered to match any of our 11 exterior trim colors. Made from .018" thick aluminum, coil stock is available in 24" (610) x 50' (15240) rolls. Color-matched 1 ¼" (32)-long stainless steel trim nails are also available and can be ordered in 1 lb/454 kg boxes.

TRIM COMBINATIONS

Mix and match trim to create a variety of combinations. Not all sill combinations are shown. Contact your Andersen supplier for more information.

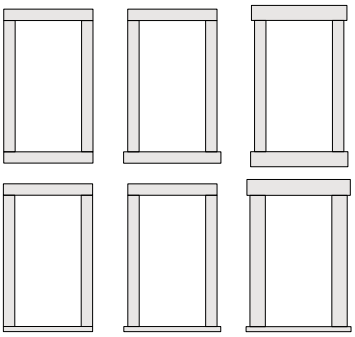

Flat Casing can be used on all four sides flush or extended at the head or sill. Combine 3 ½" (89) and 4 ½" (114) flat casing, or use with a flush or extended sill nose.

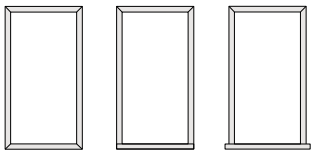

Brick Mould can be used on all four sides or with a flush or extended sill nose.

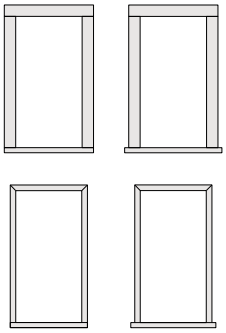

Sill Nose can be used with flat casing or brick mould. It can be applied flush or extended.

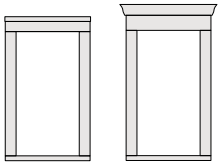

Decorative Drip Cap or **Cornice** can be used above flat casing at the head.

Dimensions in parentheses are in millimeters.

Window and Patio Door Attachment

Field-Applied Attachment Strip

Field-applied attachment strip fastens to framing through window or patio door installation flange and flashing tape with screws. Exterior trim connects securely to the field-applied attachment strip. Follow window and patio door installation guides for flashing instructions.

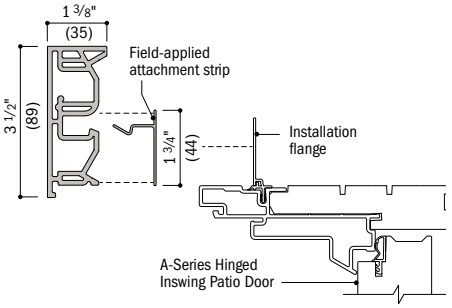

Factory-Applied Trim Flange

Factory-applied trim flanges are also available. Exterior trim connects securely to the trim flange already in place.

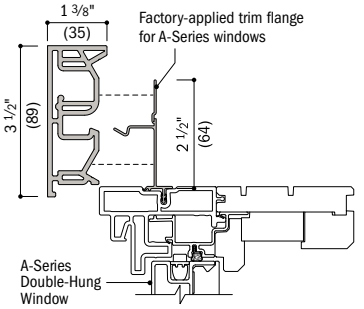

3 1/2" (89) Flat Casing and 4 1/2" (114) Flat Casing

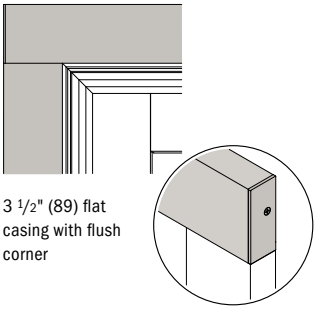

3 1/2" (89) flat casing with flush corner

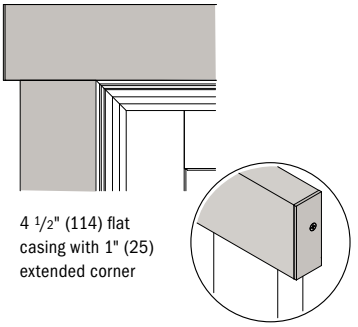

4 1/2" (114) flat casing with 1" (25) extended corner

End caps are used at corners for flat casing and are handed as viewed from the exterior.

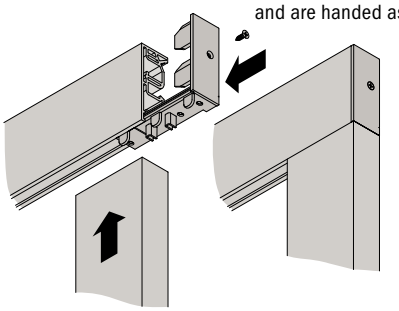

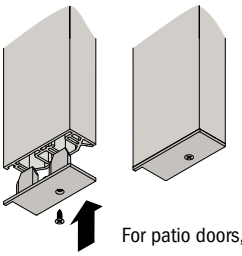

For patio doors, end caps are used at the sill.

Formula for dimension of window/door plus exterior trim:

Add 4 1/4" (108) per side for 4 1/2" (114) flat casing

Add 3 1/4" (83) per side for 3 1/2" (89) flat casing

Trim Details

Scale 3" (76) = 1'-0" (305) – 1:4

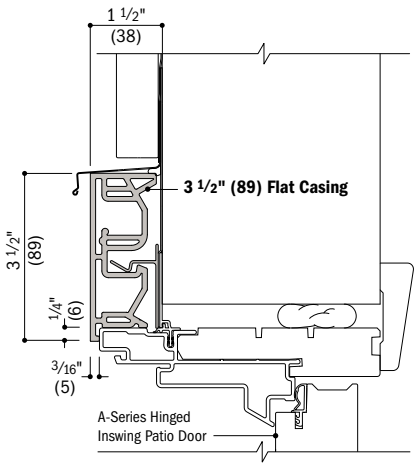

Vertical Section
A-Series Hinged Inswing Patio Door with 3 1/2" (89) Flat Casing

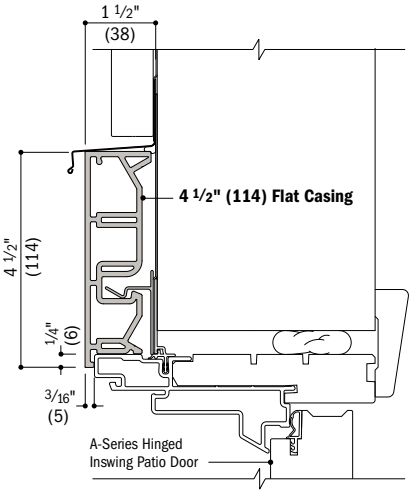

Vertical Section
A-Series Hinged Inswing Patio Door with 4 1/2" (114) Flat Casing

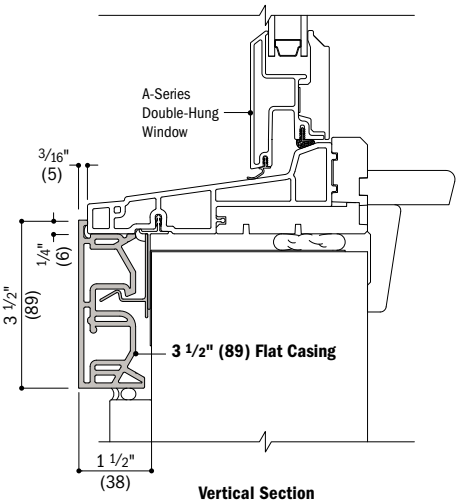

Vertical Section
A-Series Double-Hung Window with 3 1/2" (89) Flat Casing at Sill

- Typical trim combinations shown. Additional combinations may also be used. Some restrictions apply. Contact your Andersen supplier for more information.
- Dimensions in parentheses are in millimeters.
- Details are for illustration only and are not intended to represent product installation methods or materials. Refer to product installation instructions at andersenwindows.com.

Brick Mould

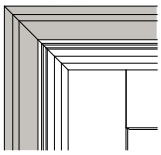

Brick mould with mitered corners

Formula for dimension of window/door plus exterior trim:

Add 1 3/4" (44) per side for brick mould

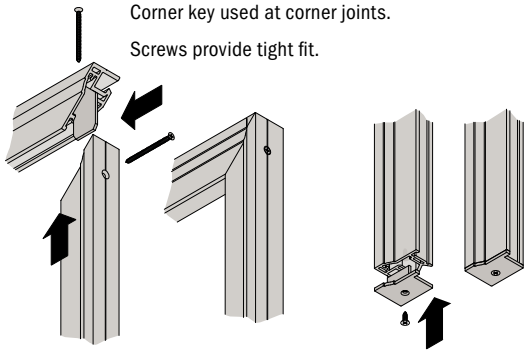

Corner key used at corner joints.

Screws provide tight fit.

For patio doors, end caps are used at the sill.

Trim Details

Scale 3" (76) = 1'-0" (305) – 1:4

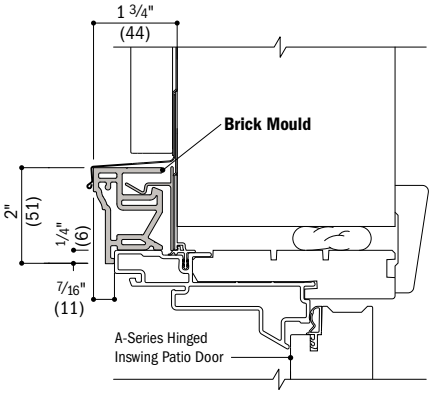

Vertical Section
A-Series Hinged Inswing Patio Door with Brick Mould

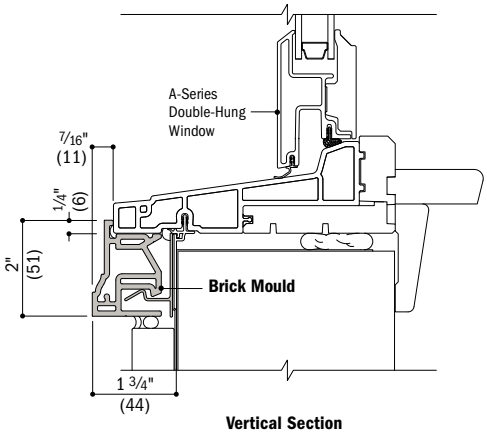

Vertical Section
A-Series Double-Hung Window with Brick Mould at Sill

Sill Nose

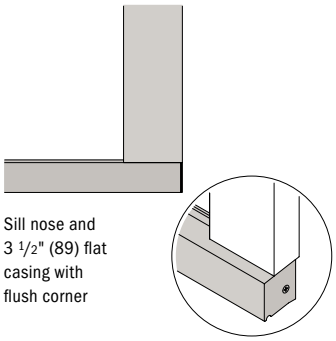

Sill nose and 3 1/2" (89) flat casing with flush corner

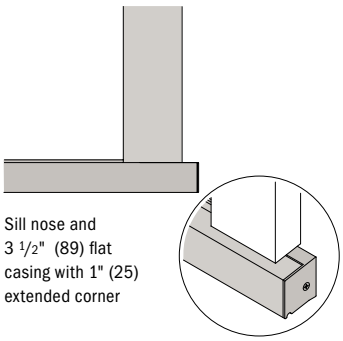

Sill nose and 3 1/2" (89) flat casing with 1" (25) extended corner

Formula for dimension of window plus exterior trim:

Add 1 15/16" (49) for sill nose

Trim Detail

Scale 3" (76) = 1'-0" (305) – 1:4

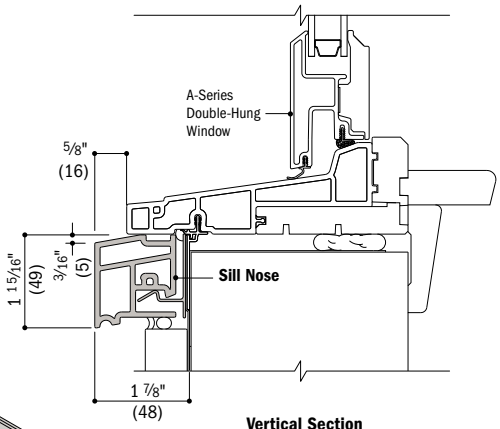

Vertical Section
A-Series Double-Hung Window with Sill Nose

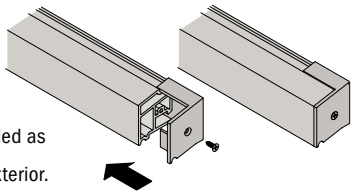

End caps are handed as viewed from the exterior.

- Typical trim combinations shown. Additional combinations may also be used. Some restrictions apply. Contact your Andersen supplier for more information.
- Dimensions in parentheses are in millimeters.
- Details are for illustration only and are not intended to represent product installation methods or materials. Refer to product installation instructions at andersenwindows.com.

Decorative Drip Cap

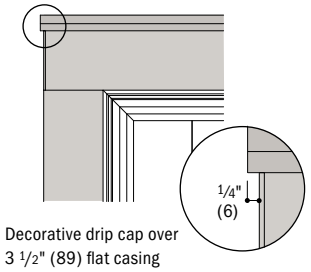

Decorative drip cap over
3 1/2" (89) flat casing

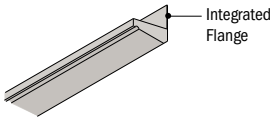

Cornices

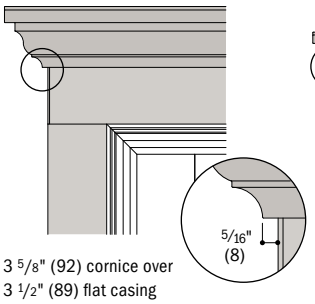

3 5/8" (92) cornice over
3 1/2" (89) flat casing

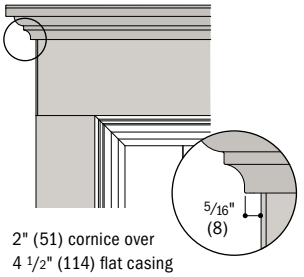

2" (51) cornice over
4 1/2" (114) flat casing

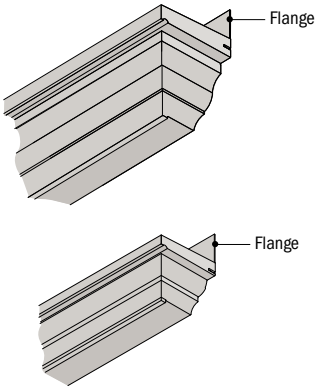

Trim Details

Scale 3" (76) = 1'-0" (305) – 1:4

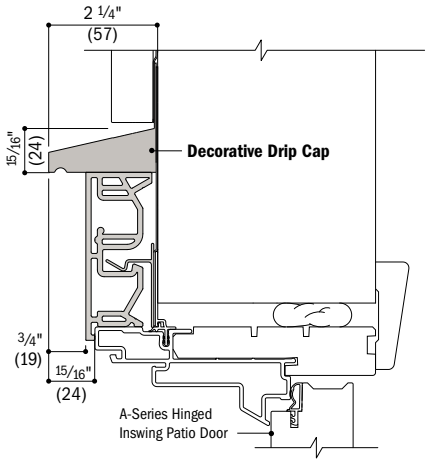

Vertical Section
A-Series Hinged Inswing Patio Door with
Decorative Drip Cap Over 3 1/2" (89) Flat Casing

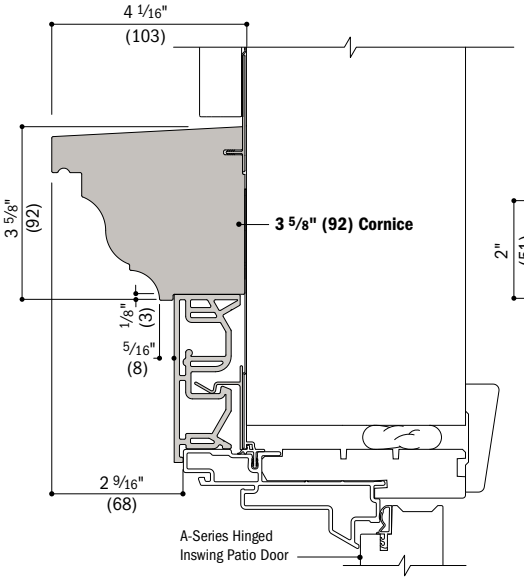

Vertical Section
A-Series Hinged Inswing Patio Door with
3 5/8" (92) Cornic Over 3 1/2" (89) Flat Casing

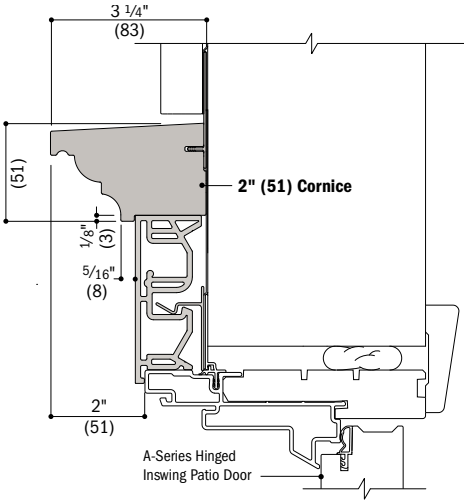

Vertical Section
A-Series Hinged Inswing Patio Door with
2" (51) Cornice Over 3 1/2" (89) Flat Casing

Mull Cover

3 5/8" (95) mull cover is available for installations where windows or patio doors have been installed into separate rough openings to obtain a joined appearance.

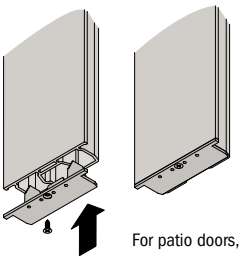

For patio doors, end caps are used at the sill.

Separate Rough Opening Detail

Scale 3" (76) = 1'-0" (305) – 1:4

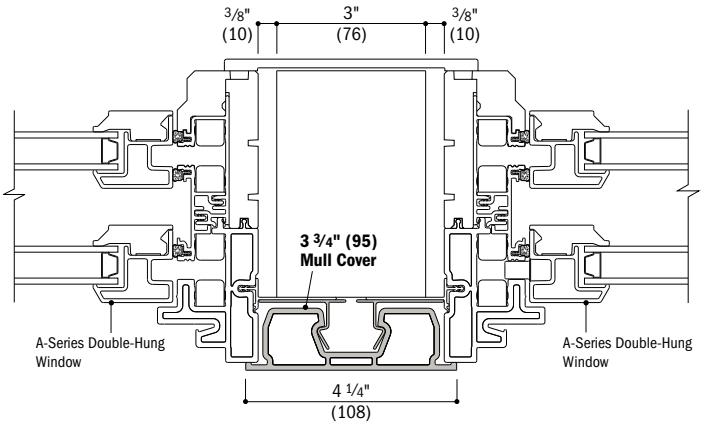

Horizontal Section
A-Series Double-Hung Windows and 3 3/4" (95) Mull Cover

- Typical trim combinations shown. Additional combinations may also be used. Some restrictions apply. Contact your Andersen supplier for more information.
- Dimensions in parentheses are in millimeters.
- Details are for illustration only and are not intended to represent product installation methods or materials. Refer to product installation instructions at andersenwindows.com.
- Consult with an architect or structural engineer regarding minimum requirements for structural support members between adjacent rough openings.

Andersen® windows and patio doors make it easy to create a wide variety of combination designs

Combination Types

Ribbons are horizontal window combinations (vertical joins) where opposite ends (head and sill) of individual windows are fastened to the building structure. Stacks are vertical window combinations (horizontal joins) where opposite sides (both side jambs) of individual windows are fastened to the building structure. One-way configurations or two-way configurations are used in combination designs.

One-Way

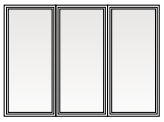

Ribbon Combination

Stack Combination

Two-Way

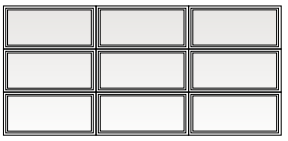

Multiple Ribbon/Stack Combination

Two-way combinations exist when multiple vertical stacks and horizontal ribbons are joined together. Unlike one-way combinations, the adjacent sides (head and sill, or both side jambs) of individual units are not necessarily fastened directly to the building structure. Two-way combinations are joined with both vertical and horizontal joining material, and may require reinforced joining materials and brackets depending on the local building code requirement for design wind load (measured in pounds per square foot, psf).

Determining Design Wind Load Performance

Proper combination design in conformance with local wind load requirements is vital to the success of your project. To make sure a combination is safe and that it complies with local building codes, the combination design wind load performance capacity must be determined. Correctly determining this performance capacity involves the following three steps:

STEP 1: Determine Building Code Requirement

Make sure you have the proper local codes and have identified specified compliance values. This calculated value (psf) will be used to determine if the combination will be acceptable (STEP 3).

STEP 2: Determine Product Performance

Compare product Design Pressure Rating data to the local building code (psf) requirement. This will show whether the individual units in a combination design are acceptable.

STEP 3: Determine Combination Performance

This step helps determine whether a given product, size, configuration and joining material type will meet the local building code design wind load requirement. To determine what joining material type to use (fiberglass, LVL or clips), compare the local building code design wind load requirement to the design wind load table value for a particular joining material on the following pages.

Andersen Joining Materials

For a successful installation, one engineered to provide the required design pressure, it is important Andersen joining materials and installation accessories be specified by a project architect or contractor. For one- and two-way combinations, Andersen offers a joining system to meet specified performance requirements. Patio door combinations are joined using fiberglass material. Window joining materials include fiberglass, Laminated Veneer Lumber (LVL) or clips. Each creates a joining system that enhances the look of Andersen products without sacrificing performance.

The addition of joining materials will affect the overall rough opening dimension; see page 226. **For all joining methods, read and follow product joining and installation instructions in their entirety. Visit andersenwindows.com for instructions.**

Exterior trim strips and trim strip end caps are included with each kit for finishing the exterior join. Interior casing is included with each window joining kit for finishing the join on the interior. Components used with each joining system will vary depending on products being joined. Check with your Andersen supplier for more information.

Reinforced joining material is used to create product alignment, positive joining and load transfer between Andersen windows and doors and the rough opening. They provide added strength capable of withstanding a greater range of wind load pressures. Non-reinforced joining material is used to create alignment and positive joining between windows. The structural performance of any combination is only as high as the lowest structural performance rating of any individual window or joining material in the combination.

Contact your Andersen supplier for specific performance and product recommendations.

Joining Materials

Easy Connect fiberglass joining material utilizes either ¾" (19) x 5 ¾" (146) fiberglass interlocking joining plates for 4 9/16" (116) jamb depths or ¾" (19) x 7 ¾" (197) fiberglass interlocking joining plates for higher performance for one-way and two-way joining, and is required for hinged inswing patio doors with 6 9/16" (167) jambs. For windows, the Easy Connect Joining System makes installation at the job site easier with smaller, factory-assembled sub-group combinations that join as they are installed in the rough opening. The innovative design eliminates the need to disassemble units prior to joining and provides higher performance. Also available for windows, fully joined combinations are factory assembled and arrive ready for installation in sizes up to 12' (3658) x 8' (2438) or 8' (2438) x 12' (3658). Joining kits for windows and patio doors include the necessary joining materials for individual units to be joined at the job site. Extension jamb kits are available for field-joined combinations. Extension jambs are available factory applied for factory-joined window combinations. In some situations, joining material may prohibit the application of perimeter extension jambs. For more information on fiberglass joining see page 20 or contact your Andersen supplier. Visit **andersenwindow.com/joining** to view an Easy Connect Joining System video.

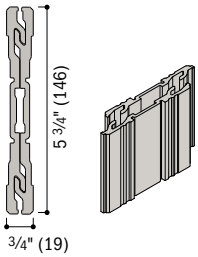

¾" (19) x 5 ¾" (146)
Easy Connect Fiberglass Joining Material
For 4 9/16" (116) base jamb depths.

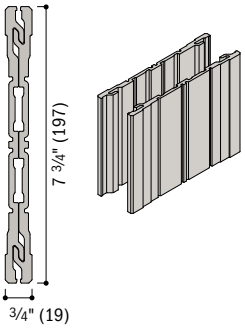

¾" (19) x 7 ¾" (197)
Easy Connect Fiberglass Joining Material
For higher performance for 1-way and 2-way joining.
Required for hinged inswing patio doors with 6 9/16" (167) or greater exterior extension jamb depths.

Laminated Veneer Lumber (LVL) joining materials with aluminum exterior trim receiver are used for factory-joined specialty-to-specialty window combinations only. Available for both 4 9/16" (116) and 6 9/16" (167) depths in lengths up to 10'-4" (3150).

Clips are mounted to the midpoint of the jambs being joined and are used for one-way (ribbon or stack) joining only. Clip joining includes a CPVC exterior trim receiver and foam insulation.

1-Way Clip Joining

A-Series Casement, Awning, Double-Hung, Picture, Transom, Specialty Windows*

Average Adjacent Window Dimension							
(A + B) ÷ 2 = **10'-0"** (3048)	63	42	32				
(A + B) ÷ 2 = **9'-6"** (2896)	63	42	32				
(A + B) ÷ 2 = **9'-0"** (2743)	63	42	32				
(A + B) ÷ 2 = **8'-6"** (2591)	63	42	32				
(A + B) ÷ 2 = **8'-0"** (2438)	63	42	32				
(A + B) ÷ 2 = **7'-6"** (2286)	63	42	32				
(A + B) ÷ 2 = **7'-0"** (2134)	63	42	32				
(A + B) ÷ 2 = **6'-6"** (1981)	63	42	32				
(A + B) ÷ 2 = **6'-0"** (1829)	63	42	32				
(A + B) ÷ 2 = **5'-6"** (1676)	63	42	33				
(A + B) ÷ 2 = **5'-0"** (1524)	63	43	34				
(A + B) ÷ 2 = **4'-6"** (1372)	65	45	35				
(A + B) ÷ 2 = **4'-0"** (1219)	67	47	37				
(A + B) ÷ 2 = **3'-6"** (1067)	70	51	41	31			
(A + B) ÷ 2 = **3'-0"** (914)	70	55	44	33			
(A + B) ÷ 2 = **2'-6"** (762)	70	64	52	39	33		
(A + B) ÷ 2 = **2'-0"** (610)	70	70	60	45	38	30	
(A + B) ÷ 2 = **1'-6"** (457)	70	70	70	60	50	40	34
C = (length of join)	**5'-6"** (1676)	**6'-0"** (1829)	**6'-6"** (1981)	**7'-0"** (2134)	**7'-6"** (2286)	**8'-0"** (2438)	**8'-6"** (2591)

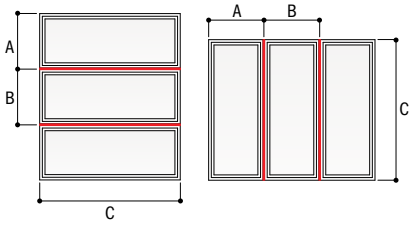

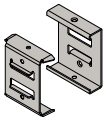

¾" (19) Joining Clips

- Numerical values in charts represent structural pressure only.
- Structural performance of any combination is only as high as the lowest structural performance of any individual unit or joining material in the combination.
- Andersen® products must be installed and anchored properly according to joining and installation instructions to meet rated structural performance. Refer to product joining and installation instructions at andersenwindows.com.
- Contact your Andersen supplier for joining windows to patio doors and for specific performance and product recommendations.
- Dimensions in parentheses are in millimeters.

*LVL joining material will be used for factory-joined specialty-to-specialty window combinations. See charts on pages 200-201.

1-Way Easy Connect Fiberglass Joining*

A-Series Casement, Awning, Double-Hung, Picture, Transom, Specialty Windows**

4 9/16" (116) Minimum Wall Depth

Average Adjacent Window Dimension													
(A + B) ÷ 2 = **12'-0"** (3658)	70	70	70	70	70	70	70	70	70	70	66	58	50
(A + B) ÷ 2 = **11'-6"** (3505)	70	70	70	70	70	70	70	70	70	70	66	58	50
(A + B) ÷ 2 = **11'-0"** (3353)	70	70	70	70	70	70	70	70	70	70	66	58	50
(A + B) ÷ 2 = **10'-6"** (3200)	70	70	70	70	70	70	70	70	70	70	66	58	50
(A + B) ÷ 2 = **10'-0"** (3048)	70	70	70	70	70	70	70	70	70	70	66	58	50
(A + B) ÷ 2 = **9'-6"** (2896)	70	70	70	70	70	70	70	70	70	70	66	58	50
(A + B) ÷ 2 = **9'-0"** (2743)	70	70	70	70	70	70	70	70	70	70	66	58	50
(A + B) ÷ 2 = **8'-6"** (2591)	70	70	70	70	70	70	70	70	70	70	66	58	50
(A + B) ÷ 2 = **8'-0"** (2438)	70	70	70	70	70	70	70	70	70	70	66	58	50
(A + B) ÷ 2 = **7'-6"** (2286)	70	70	70	70	70	70	70	70	70	70	66	58	50
(A + B) ÷ 2 = **7'-0"** (2134)	70	70	70	70	70	70	70	70	70	70	66	58	51
(A + B) ÷ 2 = **6'-6"** (1981)	70	70	70	70	70	70	70	70	70	70	67	59	52
(A + B) ÷ 2 = **6'-0"** (1829)	70	70	70	70	70	70	70	70	70	70	68	60	54
(A + B) ÷ 2 = **5'-6"** (1676)	70	70	70	70	70	70	70	70	70	70	69	62	56
(A + B) ÷ 2 = **5'-0"** (1524)	70	70	70	70	70	70	70	70	70	70	70	65	59
(A + B) ÷ 2 = **4'-6"** (1372)	70	70	70	70	70	70	70	70	70	70	70	69	63
(A + B) ÷ 2 = **4'-0"** (1219)	70	70	70	70	70	70	70	70	70	70	70	70	68
(A + B) ÷ 2 = **3'-6"** (1067)	70	70	70	70	70	70	70	70	70	70	70	70	70
(A + B) ÷ 2 = **3'-0"** (914)	70	70	70	70	70	70	70	70	70	70	70	70	70
(A + B) ÷ 2 = **2'-6"** (762)	70	70	70	70	70	70	70	70	70	70	70	70	70
(A + B) ÷ 2 = **2'-0"** (610)	70	70	70	70	70	70	70	70	70	70	70	70	70
(A + B) ÷ 2 = **1'-6"** (457)	70	70	70	70	70	70	70	70	70	70	70	70	70
C = (length of join)	**2'-0"** (610)	**2'-6"** (762)	**3'-0"** (914)	**3'-6"** (1067)	**4'-0"** (1219)	**4'-6"** (1372)	**5'-0"** (1524)	**5'-6"** (1676)	**6'-0"** (1829)	**6'-6"** (1981)	**7'-0"** (2134)	**7'-6"** (2286)	**8'-0"** (2438)

continued on next page

2-Way Easy Connect Fiberglass Joining*

A-Series Casement, Awning, Double-Hung, Picture, Transom, Specialty Windows**

4 9/16" (116) Minimum Wall Depth

Average Adjacent Window Dimension													
(A + B) ÷ 2 = **12'-0"** (3658)	68	54	45	38	34	30							
(A + B) ÷ 2 = **11'-6"** (3505)	70	56	47	40	35	31							
(A + B) ÷ 2 = **11'-0"** (3353)	70	59	49	42	37	33							
(A + B) ÷ 2 = **10'-6"** (3200)	70	62	51	44	38	34	31						
(A + B) ÷ 2 = **10'-0"** (3048)	70	65	54	46	40	36	32						
(A + B) ÷ 2 = **9'-6"** (2896)	70	68	57	49	43	38	34	31					
(A + B) ÷ 2 = **9'-0"** (2743)	70	70	60	51	45	40	36	33	30				
(A + B) ÷ 2 = **8'-6"** (2591)	70	70	64	54	48	42	38	35	32				
(A + B) ÷ 2 = **8'-0"** (2438)	70	70	68	58	51	45	40	37	34	31			
(A + B) ÷ 2 = **7'-6"** (2286)	70	70	70	62	54	48	43	39	36	33	31		
(A + B) ÷ 2 = **7'-0"** (2134)	70	70	70	66	58	51	46	42	38	35	33	31	
(A + B) ÷ 2 = **6'-6"** (1981)	70	70	70	70	62	55	50	45	41	38	35	33	31
(A + B) ÷ 2 = **6'-0"** (1829)	70	70	70	70	68	60	54	49	45	41	38	36	33
(A + B) ÷ 2 = **5'-6"** (1676)	70	70	70	70	70	66	59	54	49	45	42	39	36
(A + B) ÷ 2 = **5'-0"** (1524)	70	70	70	70	70	70	65	59	54	50	46	43	40
(A + B) ÷ 2 = **4'-6"** (1372)	70	70	70	70	70	70	70	66	60	55	51	48	45
(A + B) ÷ 2 = **4'-0"** (1219)	70	70	70	70	70	70	70	70	68	62	58	54	50
(A + B) ÷ 2 = **3'-6"** (1067)	70	70	70	70	70	70	70	70	70	70	66	62	57
(A + B) ÷ 2 = **3'-0"** (914)	70	70	70	70	70	70	70	70	70	70	70	70	67
(A + B) ÷ 2 = **2'-6"** (762)	70	70	70	70	70	70	70	70	70	70	70	70	70
(A + B) ÷ 2 = **2'-0"** (610)	70	70	70	70	70	70	70	70	70	70	70	70	70
(A + B) ÷ 2 = **1'-6"** (457)	70	70	70	70	70	70	70	70	70	70	70	70	70
C = (length of join)	**2'-0"** (610)	**2'-6"** (762)	**3'-0"** (914)	**3'-6"** (1067)	**4'-0"** (1219)	**4'-6"** (1372)	**5'-0"** (1524)	**5'-6"** (1676)	**6'-0"** (1829)	**6'-6"** (1981)	**7'-0"** (2134)	**7'-6"** (2286)	**8'-0"** (2438)

continued on next page

- Numerical values in charts represent structural pressure only.
- Structural performance of any combination is only as high as the lowest structural performance of any individual unit or joining material in the combination.
- Easy Connect and other fiberglass joins are certified up to PG70 when installed according to Andersen installation instructions.
- Andersen® products must be installed and anchored properly according to joining and installation instructions to meet rated structural performance. Refer to product joining and installation instructions at andersenwindows.com.
- Dimensions in parentheses are in millimeters.
- Contact your Andersen supplier for joining windows to patio doors and for specific performance and product recommendations.

*Fixed transom windows (ATF) can only be joined to venting transoms windows (ATV) vertically and double-hung windows (ADH) can only be joinined to double-hung windows (ADH) vertically. For "T" combinations not found in iQ+, contact your Andersen supplier.

**LVL joining material will be used for factory-joined specialty-to-specialty window combinations. See charts on pages 200-201.

1-Way Easy Connect Fiberglass Joining continued from previous page

42	35	30					
42	35	30					
42	35	30					
42	35	30					
42	35	30					
42	35	30					
42	35	30					
42	35	30					
42	36	31					
43	37	32					
44	38	33					
45	39	34	30				
47	41	36	31				
50	44	39	33				
54	47	42	36	31			
58	51	46	39	34			
62	57	50	43	37	32		
69	64	57	49	42	36	32	
70	70	66	56	48	42	37	32
70	70	70	67	58	50	44	38
70	70	70	70	70	62	54	48
70	70	70	70	70	70	70	63
8'-6" (2591)	**9'-0"** (2743)	**9'-6"** (2896)	**10'-0"** (3048)	**10'-6"** (3200)	**11'-0"** (3353)	**11'-6"** (3505)	**12'-0"** (3658)

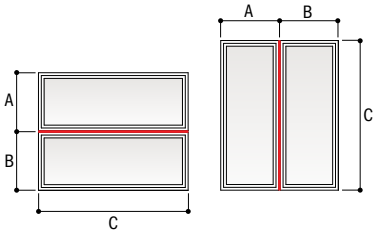

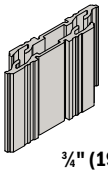

¾" (19) x 5 ¾" (146)
Easy Connect Fiberglass Joining Material
For 4 9/16" (116) base jamb depths.

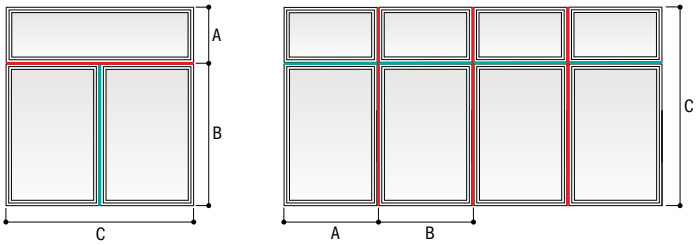

Red lines represent priority join (dimension C in table).

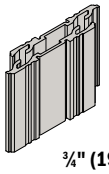

¾" (19) x 5 ¾" (146)
Easy Connect Fiberglass Joining Material
For 4 9/16" (116) base jamb depths.

2-Way Easy Connect Fiberglass Joining continued from previous page

32							
35	32						
39	35	31					
44	40	35	32				
51	45	41	37	33	30		
59	53	47	43	39	35	32	30
70	64	57	51	47	42	39	36
70	70	70	64	58	53	49	45
70	70	70	70	70	70	65	60
8'-6" (2591)	**9'-0"** (2743)	**9'-6"** (2896)	**10'-0"** (3048)	**10'-6"** (3200)	**11'-0"** (3353)	**11'-6"** (3505)	**12'-0"** (3658)

- Numerical values in charts represent structural pressure only.
- Structural performance of any combination is only as high as the lowest structural performance of any individual unit or joining material in the combination.
- Easy Connect and other fiberglass joins are certified up to PG70 when installed according to Andersen installation instructions.
- Andersen® products must be installed and anchored properly according to joining and installation instructions to meet rated structural performance. Refer to product joining and installation instructions at andersenwindows.com.
- Dimensions in parentheses are in millimeters.
- Contact your Andersen supplier for joining windows to patio doors and for specific performance and product recommendations.

*Fixed transom windows (ATF) can only be joined to venting transoms windows (ATV) vertically and double-hung windows (ADH) can only be joinined to double-hung windows (ADH) vertically. For "T" combinations not found in iQ+, contact your Andersen supplier.

**LVL joining material will be used for factory-joined specialty-to-specialty window combinations. See charts on pages 200-201.

1-Way LVL Joining

A-Series Factory-Joined Specialty Windows

4 9/16" (116) Minimum Wall Depth

Average Adjacent Window Dimension										
(A + B) ÷ 2 = **10'-0"** (3048)	70	70	70	55	44	33				
(A + B) ÷ 2 = **9'-6"** (2896)	70	70	70	55	44	33				
(A + B) ÷ 2 = **9'-0"** (2743)	70	70	70	55	44	33				
(A + B) ÷ 2 = **8'-6"** (2591)	70	70	70	55	44	33				
(A + B) ÷ 2 = **8'-0"** (2438)	70	70	70	55	44	33				
(A + B) ÷ 2 = **7'-6"** (2286)	70	70	70	55	44	33				
(A + B) ÷ 2 = **7'-0"** (2134)	70	70	70	55	44	33				
(A + B) ÷ 2 = **6'-6"** (1981)	70	70	70	56	45	34				
(A + B) ÷ 2 = **6'-0"** (1829)	70	70	70	56	45	35				
(A + B) ÷ 2 = **5'-6"** (1676)	70	70	70	58	47	36	30			
(A + B) ÷ 2 = **5'-0"** (1524)	70	70	70	60	49	38	32			
(A + B) ÷ 2 = **4'-6"** (1372)	70	70	70	64	52	40	34			
(A + B) ÷ 2 = **4'-0"** (1219)	70	70	70	67	55	43	36			
(A + B) ÷ 2 = **3'-6"** (1067)	70	70	70	70	61	48	41	33		
(A + B) ÷ 2 = **3'-0"** (914)	70	70	70	70	67	53	45	36	31	
(A + B) ÷ 2 = **2'-6"** (762)	70	70	70	70	70	62	53	43	37	31
(A + B) ÷ 2 = **2'-0"** (610)	70	70	70	70	70	70	62	50	44	36
(A + B) ÷ 2 = **1'-6"** (457)	70	70	70	70	70	70	70	67	59	49
C = (length of join)	**5'-6"** (1676)	**6'-0"** (1829)	**6'-6"** (1981)	**7'-0"** (2134)	**7'-6"** (2286)	**8'-0"** (2438)	**8'-6"** (2591)	**9'-0"** (2743)	**9'-6"** (2896)	**10'-0"** (3048)

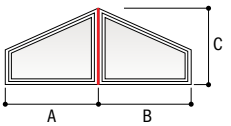

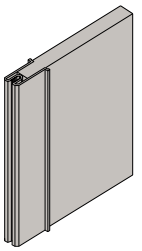

¾" (19) x 5 ¾" (146)
LVL Joining Material
For 4 9/16" (116) base jamb depths.

1-Way LVL Joining

A-Series Factory-Joined Specialty Windows

6 9/16" (167) Minimum Wall Depth

Average Adjacent Window Dimension										
(A + B) ÷ 2 = **10'-0"** (3048)	70	70	70	70	70	66	54	42	35	
(A + B) ÷ 2 = **9'-6"** (2896)	70	70	70	70	70	66	54	42	35	
(A + B) ÷ 2 = **9'-0"** (2743)	70	70	70	70	70	66	54	42	35	
(A + B) ÷ 2 = **8'-6"** (2591)	70	70	70	70	70	66	54	42	35	
(A + B) ÷ 2 = **8'-0"** (2438)	70	70	70	70	70	66	54	42	36	
(A + B) ÷ 2 = **7'-6"** (2286)	70	70	70	70	70	67	55	43	36	
(A + B) ÷ 2 = **7'-0"** (2134)	70	70	70	70	70	67	56	44	37	
(A + B) ÷ 2 = **6'-6"** (1981)	70	70	70	70	70	69	57	45	39	
(A + B) ÷ 2 = **6'-0"** (1829)	70	70	70	70	70	70	59	47	40	
(A + B) ÷ 2 = **5'-6"** (1676)	70	70	70	70	70	70	62	49	42	
(A + B) ÷ 2 = **5'-0"** (1524)	70	70	70	70	70	70	65	52	44	
(A + B) ÷ 2 = **4'-6"** (1372)	70	70	70	70	70	70	70	56	48	40
(A + B) ÷ 2 = **4'-0"** (1219)	70	70	70	70	70	70	70	60	52	42
(A + B) ÷ 2 = **3'-6"** (1067)	70	70	70	70	70	70	70	67	58	48
(A + B) ÷ 2 = **3'-0"** (914)	70	70	70	70	70	70	70	70	64	53
(A + B) ÷ 2 = **2'-6"** (762)	70	70	70	70	70	70	70	70	70	63
(A + B) ÷ 2 = **2'-0"** (610)	70	70	70	70	70	70	70	70	70	70
(A + B) ÷ 2 = **1'-6"** (457)	70	70	70	70	70	70	70	70	70	70
C = (length of join)	**5'-6"** (1676)	**6'-0"** (1829)	**6'-6"** (1981)	**7'-0"** (2134)	**7'-6"** (2286)	**8'-0"** (2438)	**8'-6"** (2591)	**9'-0"** (2743)	**9'-6"** (2896)	**10'-0"** (3048)

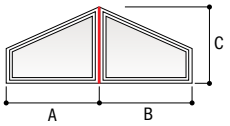

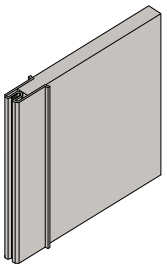

¾" (19) x 7 ¾" (197)
LVL Joining Material
For 6 9/16" (167) base jamb depths.

- Numerical values in charts represent structural pressure only.
- Structural performance of any combination is only as high as the lowest structural performance of any individual unit or joining material in the combination.
- Andersen® products must be installed and anchored properly according to joining and installation instructions to meet rated structural performance. Refer to product joining and installation instructions at andersenwindows.com.
- Dimensions in parentheses are in millimeters.
- Contact your Andersen supplier for joining windows to patio doors and for specific performance and product recommendations.

2-Way LVL Joining

A-Series Windows: Factory-Joined Specialty

4 9/16" (116) Minimum Wall Depth

Average Adjacent Window Dimension									
(A + B) ÷ 2 = **6'-6"** (1981)	42	31							
(A + B) ÷ 2 = **6'-0"** (1829)	45	33							
(A + B) ÷ 2 = **5'-6"** (1676)	50	37	30						
(A + B) ÷ 2 = **5'-0"** (1524)	54	40	32						
(A + B) ÷ 2 = **4'-6"** (1372)	61	45	37						
(A + B) ÷ 2 = **4'-0"** (1219)	67	49	40	31					
(A + B) ÷ 2 = **3'-6"** (1067)	70	58	47	36	31				
(A + B) ÷ 2 = **3'-0"** (914)	70	65	54	41	35				
(A + B) ÷ 2 = **2'-6"** (762)	70	70	66	51	43	34			
(A + B) ÷ 2 = **2'-0"** (610)	70	70	70	61	52	41	35		
(A + B) ÷ 2 = **1'-6"** (457)	70	70	70	70	70	57	49	40	35
C = (length of join)	**5'-6"** (1676)	**6'-0"** (1829)	**6'-6"** (1981)	**7'-0"** (2134)	**7'-6"** (2286)	**8'-0"** (2438)	**8'-6"** (2591)	**9'-0"** (2743)	**9'-6"** (2896)

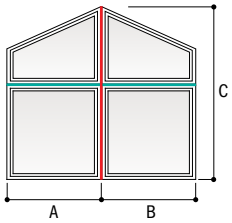

Red lines represent priority join (dimension C in table).

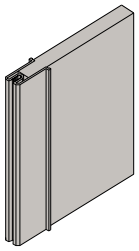

¾" (19) x 5 ¾" (146) LVL Joining Material
For 4 9/16" (116) base jamb depths.

2-Way LVL Joining

A-Series Windows: Factory-Joined Specialty

6 9/16" (167) Minimum Wall Depth

Average Adjacent Window Dimension										
(A + B) ÷ 2 = **10'-0"** (3048)	69	49	40	31						
(A + B) ÷ 2 = **9'-6"** (2896)	70	52	42	33						
(A + B) ÷ 2 = **9'-0"** (2743)	70	54	44	34						
(A + B) ÷ 2 = **8'-6"** (2591)	70	58	47	37	31					
(A + B) ÷ 2 = **8'-0"** (2438)	70	61	50	38	32					
(A + B) ÷ 2 = **7'-6"** (2286)	70	65	54	41	35					
(A + B) ÷ 2 = **7'-0"** (2134)	70	69	57	44	37					
(A + B) ÷ 2 = **6'-6"** (1981)	70	70	62	48	40	32				
(A + B) ÷ 2 = **6'-0"** (1829)	70	70	66	51	43	34	30			
(A + B) ÷ 2 = **5'-6"** (1676)	70	70	70	56	48	38	33			
(A + B) ÷ 2 = **5'-0"** (1524)	70	70	70	61	51	41	35			
(A + B) ÷ 2 = **4'-6"** (1372)	70	70	70	69	58	46	40	33		
(A + B) ÷ 2 = **4'-0"** (1219)	70	70	70	70	64	51	44	36	32	
(A + B) ÷ 2 = **3'-6"** (1067)	70	70	70	70	70	59	51	42	37	31
(A + B) ÷ 2 = **3'-0"** (914)	70	70	70	70	70	67	58	48	42	35
(A + B) ÷ 2 = **2'-6"** (762)	70	70	70	70	70	80	71	59	51	43
(A + B) ÷ 2 = **2'-0"** (610)	70	70	70	70	70	80	80	70	62	52
(A + B) ÷ 2 = **1'-6"** (457)	70	70	70	70	70	80	80	80	70	70
C = (length of join)	**5'-6"** (1676)	**6'-0"** (1829)	**6'-6"** (1981)	**7'-0"** (2134)	**7'-6"** (2286)	**8'-0"** (2438)	**8'-6"** (2591)	**9'-0"** (2743)	**9'-6"** (2896)	**10'-0"** (3048)

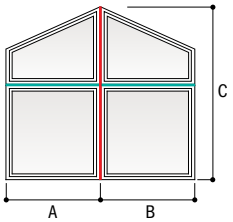

Red lines represent priority join (dimension C in table).

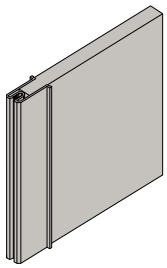

¾" (19) x 7 ¾" (197) LVL Joining Material
For 6 9/16" (167) base jamb depths.

- Numerical values in charts represent structural pressure only.
- Structural performance of any combination is only as high as the lowest structural performance of any individual unit or joining material in the combination.
- Andersen® products must be installed and anchored properly according to joining and installation instructions to meet rated structural performance. Refer to product joining and installation instructions at andersenwindows.com.
- Dimensions in parentheses are in millimeters.
- Contact your Andersen supplier for joining windows to patio doors and for specific performance and product recommendations.

1-Way Easy Connect Fiberglass Joining

A-Series Gliding and Hinged Patio Doors,* Sidelights and Transoms

4 9/16" (116) Minimum Wall Depth

Average Adjacent Window Dimension													
(A + B) ÷ 2 = **12'-0"** (3658)	70	70	70	70	70	70	70	70	70	70	70	70	67
(A + B) ÷ 2 = **11'-6"** (3505)	70	70	70	70	70	70	70	70	70	70	70	70	67
(A + B) ÷ 2 = **11'-0"** (3353)	70	70	70	70	70	70	70	70	70	70	70	70	67
(A + B) ÷ 2 = **10'-6"** (3200)	70	70	70	70	70	70	70	70	70	70	70	70	67
(A + B) ÷ 2 = **10'-0"** (3048)	70	70	70	70	70	70	70	70	70	70	70	70	67
(A + B) ÷ 2 = **9'-6"** (2896)	70	70	70	70	70	70	70	70	70	70	70	70	67
(A + B) ÷ 2 = **9'-0"** (2743)	70	70	70	70	70	70	70	70	70	70	70	70	67
(A + B) ÷ 2 = **8'-6"** (2591)	70	70	70	70	70	70	70	70	70	70	70	70	67
(A + B) ÷ 2 = **8'-0"** (2438)	70	70	70	70	70	70	70	70	70	70	70	70	67
(A + B) ÷ 2 = **7'-6"** (2286)	70	70	70	70	70	70	70	70	70	70	70	70	67
(A + B) ÷ 2 = **7'-0"** (2134)	70	70	70	70	70	70	70	70	70	70	70	70	68
(A + B) ÷ 2 = **6'-6"** (1981)	70	70	70	70	70	70	70	70	70	70	70	70	70
(A + B) ÷ 2 = **6'-0"** (1829)	70	70	70	70	70	70	70	70	70	70	70	70	70
(A + B) ÷ 2 = **5'-6"** (1676)	70	70	70	70	70	70	70	70	70	70	70	70	70
(A + B) ÷ 2 = **5'-0"** (1524)	70	70	70	70	70	70	70	70	70	70	70	70	70
(A + B) ÷ 2 = **4'-6"** (1372)	70	70	70	70	70	70	70	70	70	70	70	70	70
(A + B) ÷ 2 = **4'-0"** (1219)	70	70	70	70	70	70	70	70	70	70	70	70	70
(A + B) ÷ 2 = **3'-6"** (1067)	70	70	70	70	70	70	70	70	70	70	70	70	70
(A + B) ÷ 2 = **3'-0"** (914)	70	70	70	70	70	70	70	70	70	70	70	70	70
(A + B) ÷ 2 = **2'-6"** (762)	70	70	70	70	70	70	70	70	70	70	70	70	70
(A + B) ÷ 2 = **2'-0"** (610)	70	70	70	70	70	70	70	70	70	70	70	70	70
(A + B) ÷ 2 = **1'-6"** (457)	70	70	70	70	70	70	70	70	70	70	70	70	70
C = (length of join)	**2'-0"** (610)	**2'-6"** (762)	**3'-0"** (914)	**3'-6"** (1067)	**4'-0"** (1219)	**4'-6"** (1372)	**5'-0"** (1524)	**5'-6"** (1676)	**6'-0"** (1829)	**6'-6"** (1981)	**7'-0"** (2134)	**7'-6"** (2286)	**8'-0"** (2438)

continued on next page

1-Way Easy Connect Fiberglass Joining

A-Series Gliding and Hinged Patio Doors,* Sidelights and Transoms

6 9/16" (167) Minimum Wall Depth

Average Adjacent Window Dimension													
(A + B) ÷ 2 = **12'-0"** (3658)	70	70	70	70	70	70	70	70	70	70	70	70	70
(A + B) ÷ 2 = **11'-6"** (3505)	70	70	70	70	70	70	70	70	70	70	70	70	70
(A + B) ÷ 2 = **11'-0"** (3353)	70	70	70	70	70	70	70	70	70	70	70	70	70
(A + B) ÷ 2 = **10'-6"** (3200)	70	70	70	70	70	70	70	70	70	70	70	70	70
(A + B) ÷ 2 = **10'-0"** (3048)	70	70	70	70	70	70	70	70	70	70	70	70	70
(A + B) ÷ 2 = **9'-6"** (2896)	70	70	70	70	70	70	70	70	70	70	70	70	70
(A + B) ÷ 2 = **9'-0"** (2743)	70	70	70	70	70	70	70	70	70	70	70	70	70
(A + B) ÷ 2 = **8'-6"** (2591)	70	70	70	70	70	70	70	70	70	70	70	70	70
(A + B) ÷ 2 = **8'-0"** (2438)	70	70	70	70	70	70	70	70	70	70	70	70	70
(A + B) ÷ 2 = **7'-6"** (2286)	70	70	70	70	70	70	70	70	70	70	70	70	70
(A + B) ÷ 2 = **7'-0"** (2134)	70	70	70	70	70	70	70	70	70	70	70	70	70
(A + B) ÷ 2 = **6'-6"** (1981)	70	70	70	70	70	70	70	70	70	70	70	70	70
(A + B) ÷ 2 = **6'-0"** (1829)	70	70	70	70	70	70	70	70	70	70	70	70	70
(A + B) ÷ 2 = **5'-6"** (1676)	70	70	70	70	70	70	70	70	70	70	70	70	70
(A + B) ÷ 2 = **5'-0"** (1524)	70	70	70	70	70	70	70	70	70	70	70	70	70
(A + B) ÷ 2 = **4'-6"** (1372)	70	70	70	70	70	70	70	70	70	70	70	70	70
(A + B) ÷ 2 = **4'-0"** (1219)	70	70	70	70	70	70	70	70	70	70	70	70	70
(A + B) ÷ 2 = **3'-6"** (1067)	70	70	70	70	70	70	70	70	70	70	70	70	70
(A + B) ÷ 2 = **3'-0"** (914)	70	70	70	70	70	70	70	70	70	70	70	70	70
(A + B) ÷ 2 = **2'-6"** (762)	70	70	70	70	70	70	70	70	70	70	70	70	70
(A + B) ÷ 2 = **2'-0"** (610)	70	70	70	70	70	70	70	70	70	70	70	70	70
(A + B) ÷ 2 = **1'-6"** (457)	70	70	70	70	70	70	70	70	70	70	70	70	70
C = (length of join)	**2'-0"** (610)	**2'-6"** (762)	**3'-0"** (914)	**3'-6"** (1067)	**4'-0"** (1219)	**4'-6"** (1372)	**5'-0"** (1524)	**5'-6"** (1676)	**6'-0"** (1829)	**6'-6"** (1981)	**7'-0"** (2134)	**7'-6"** (2286)	**8'-0"** (2438)

continued on next page

- Numerical values in charts represent structural pressure only.
- Structural performance of any combination is only as high as the lowest structural performance of any individual unit or joining material in the combination.
- Easy Connect and other fiberglass joins are certified up to PG70 when installed according to Andersen installation instructions.
- Andersen® products must be installed and anchored properly according to joining and installation instructions to meet rated structural performance. Refer to product joining and installation instructions at andersenwindows.com.
- Dimensions in parentheses are in millimeters.
- Contact your Andersen supplier for joining windows to patio doors and for specific performance and product recommendations.
- Hinged inswing patio doors with a 6 9/16" (167) or greater exterior extension jamb depth require 7 3/4" (197) fiberglass joining material.

*Two-panel doors shown. Three- and four-panel doors similar with different overall A and B widths.

1-Way Easy Connect Fiberglass Joining continued from previous page

52	42	33	27	22			
52	42	33	27	22			
52	42	33	27	22			
52	42	33	27	22			
52	42	33	27	22			
52	42	33	27	23			
52	42	34	27	23			
52	42	34	28	23	20		
53	42	35	29	24	20		
53	43	35	29	25	21		
55	44	37	31	26	22		
56	46	38	32	27	23	20	
59	48	40	34	29	25	21	
62	51	43	36	31	26	23	20
66	55	46	39	33	28	25	21
70	59	50	42	36	31	27	24
70	65	55	47	40	35	30	26
70	70	62	53	45	39	34	30
70	70	70	61	52	45	39	34
70	70	70	70	62	54	47	41
70	70	70	70	70	67	58	51
70	70	70	70	70	70	70	68
8'-6" (2591)	**9'-0"** (2743)	**9'-6"** (2896)	**10'-0"** (3048)	**10'-6"** (3200)	**11'-0"** (3353)	**11'-6"** (3505)	**12'-0"** (3658)

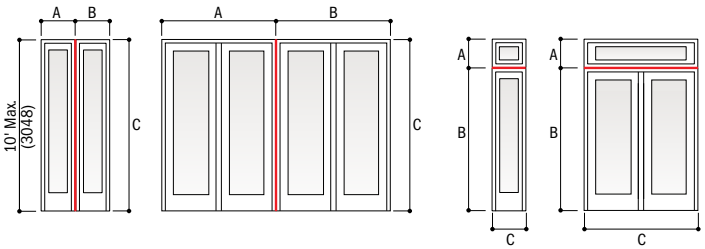

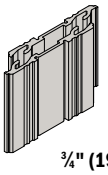

¾" (19) x 5 ¾" (146)
Easy Connect Fiberglass Joining Material
For 4 9/16" (116) base jamb depths.

When joining hinged patio doors, do not join hinge jamb to hinge jamb.

A structural header is required to separate patio door transoms and transom windows from 4-panel gliding patio doors.

1-Way Easy Connect Fiberglass Joining continued from previous page

70	64	58	52	47	39	33	28	23	20		
70	64	58	52	47	39	33	28	23	20		
70	64	58	52	47	39	33	28	23	20		
70	64	58	52	47	39	33	28	24	21		
70	64	58	52	47	40	34	29	24	21		
70	64	58	52	48	40	34	29	25	22		
70	64	58	53	48	41	35	30	25	22		
70	65	58	53	49	42	36	31	26	23	20	
70	65	59	54	50	43	37	32	27	24	21	
70	66	60	56	51	45	39	33	29	25	22	20
70	68	62	57	53	47	40	35	30	26	23	21
70	70	64	59	55	49	43	37	32	28	25	22
70	70	67	62	58	52	45	39	34	30	26	24
70	70	70	65	61	56	48	42	36	32	29	25
70	70	70	70	65	60	52	46	40	35	33	28
70	70	70	70	70	66	57	52	44	38	34	30
70	70	70	70	70	70	64	56	48	43	38	34
70	70	70	70	70	70	70	63	55	49	43	39
70	70	70	70	70	70	70	70	64	56	50	45
70	70	70	70	70	70	70	70	70	67	60	54
70	70	70	70	70	70	70	70	70	70	70	67
70	70	70	70	70	70	70	70	70	70	70	70
8'-6" (2591)	**9'-0"** (2743)	**9'-6"** (2896)	**10'-0"** (3048)	**10'-6"** (3200)	**11'-0"** (3353)	**11'-6"** (3505)	**12'-0"** (3658)	**12'-6"** (3658)	**13'-0"** (3658)	**13'-6"** (3658)	**14'-0"** (3658)

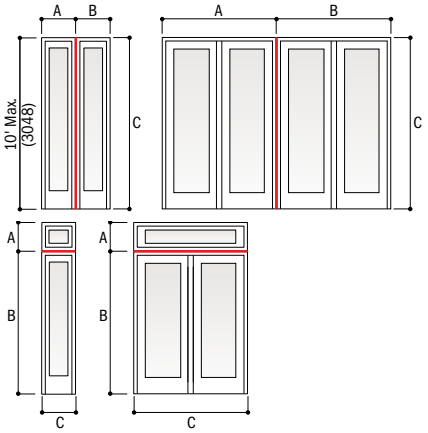

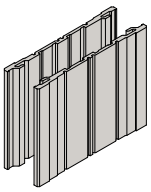

¾" (19) x 7 ¾" (197)
Easy Connect Fiberglass Joining Material
For higher performance for 1-way and 2-way joining. Required for hinged inswing patio doors with 6 9/16" (167) or greater exterior extension jamb depths.

When joining hinged patio doors, do not join hinge jamb to hinge jamb.

A structural header is required to separate patio door transoms and transom windows from 4-panel gliding patio doors.

- Numerical values in charts represent structural pressure only.
- Structural performance of any combination is only as high as the lowest structural performance of any individual unit or joining material in the combination.
- Easy Connect and other fiberglass joins are certified up to PG70 when installed according to Andersen installation instructions.
- Andersen® products must be installed and anchored properly according to joining and installation instructions to meet rated structural performance. Refer to product joining and installation instructions at andersenwindows.com.
- Dimensions in parentheses are in millimeters.
- Contact your Andersen supplier for joining windows to patio doors and for specific performance and product recommendations.
- Hinged inswing patio doors with a 6 9/16" (167) or greater exterior extension jamb depth require 7 ¾" (197) fiberglass joining material.

*Two-panel doors shown. Three- and four-panel doors similar with different overall A and B widths.

2-Way Easy Connect Fiberglass Joining

A-Series Gliding and Hinged Patio Doors,* Sidelights and Transoms

4 9/16" (116) Minimum Wall Depth

Average Adjacent Window Dimension													
(A + B) ÷ 2 = **12'-0"** (3658)	70	70	69	59	52	46	41	38	34	32	29	27	26
(A + B) ÷ 2 = **11'-6"** (3505)	70	70	70	62	54	48	43	39	36	33	31	29	27
(A + B) ÷ 2 = **11'-0"** (3353)	70	70	70	65	57	50	45	41	38	35	32	30	28
(A + B) ÷ 2 = **10'-6"** (3200)	70	70	70	68	59	53	47	43	39	36	34	31	29
(A + B) ÷ 2 = **10'-0"** (3048)	70	70	70	70	62	55	50	45	41	38	35	33	31
(A + B) ÷ 2 = **9'-6"** (2896)	70	70	70	70	66	58	52	48	44	40	37	35	32
(A + B) ÷ 2 = **9'-0"** (2743)	70	70	70	70	69	62	55	50	46	43	39	37	34
(A + B) ÷ 2 = **8'-6"** (2591)	70	70	70	70	70	65	59	53	49	45	42	39	36
(A + B) ÷ 2 = **8'-0"** (2438)	70	70	70	70	70	69	62	57	52	48	44	41	39
(A + B) ÷ 2 = **7'-6"** (2286)	70	70	70	70	70	70	67	60	55	51	47	44	41
(A + B) ÷ 2 = **7'-0"** (2134)	70	70	70	70	70	70	70	65	59	55	51	47	44
(A + B) ÷ 2 = **6'-6"** (1981)	70	70	70	70	70	70	70	70	64	59	55	51	48
(A + B) ÷ 2 = **6'-0"** (1829)	70	70	70	70	70	70	70	70	69	64	59	55	52
(A + B) ÷ 2 = **5'-6"** (1676)	70	70	70	70	70	70	70	70	70	70	65	60	56
(A + B) ÷ 2 = **5'-0"** (1524)	70	70	70	70	70	70	70	70	70	70	70	67	62
(A + B) ÷ 2 = **4'-6"** (1372)	70	70	70	70	70	70	70	70	70	70	70	70	69
(A + B) ÷ 2 = **4'-0"** (1219)	70	70	70	70	70	70	70	70	70	70	70	70	70
(A + B) ÷ 2 = **3'-6"** (1067)	70	70	70	70	70	70	70	70	70	70	70	70	70
(A + B) ÷ 2 = **3'-0"** (914)	70	70	70	70	70	70	70	70	70	70	70	70	70
(A + B) ÷ 2 = **2'-6"** (762)	70	70	70	70	70	70	70	70	70	70	70	70	70
(A + B) ÷ 2 = **2'-0"** (610)	70	70	70	70	70	70	70	70	70	70	70	70	70
(A + B) ÷ 2 = **1'-6"** (457)	70	70	70	70	70	70	70	70	70	70	70	70	70
C = (length of join)	**2'-0"** (610)	**2'-6"** (762)	**3'-0"** (914)	**3'-6"** (1067)	**4'-0"** (1219)	**4'-6"** (1372)	**5'-0"** (1524)	**5'-6"** (1676)	**6'-0"** (1829)	**6'-6"** (1981)	**7'-0"** (2134)	**7'-6"** (2286)	**8'-0"** (2438)

continued on next page

2-Way Easy Connect Fiberglass Joining

A-Series Gliding and Hinged Patio Doors,* Sidelights and Transoms

6 9/16" (167) Minimum Wall Depth

Average Adjacent Window Dimension													
(A + B) ÷ 2 = **12'-0"** (3658)	70	70	69	59	52	46	41	38	34	32	29	27	26
(A + B) ÷ 2 = **11'-6"** (3505)	70	70	70	62	54	48	43	39	36	35	31	29	27
(A + B) ÷ 2 = **11'-0"** (3353)	70	70	70	65	57	50	45	41	38	35	32	30	28
(A + B) ÷ 2 = **10'-6"** (3200)	70	70	70	68	59	53	47	43	39	36	34	31	29
(A + B) ÷ 2 = **10'-0"** (3048)	70	70	70	70	62	55	50	45	41	38	35	33	31
(A + B) ÷ 2 = **9'-6"** (2896)	70	70	70	70	66	58	52	48	44	40	37	35	33
(A + B) ÷ 2 = **9'-0"** (2743)	70	70	70	70	69	62	55	50	46	43	39	37	34
(A + B) ÷ 2 = **8'-6"** (2591)	70	70	70	70	70	65	59	53	49	45	42	39	37
(A + B) ÷ 2 = **8'-0"** (2438)	70	70	70	70	70	69	62	57	52	48	44	41	39
(A + B) ÷ 2 = **7'-6"** (2286)	70	70	70	70	70	70	67	60	55	51	47	44	41
(A + B) ÷ 2 = **7'-0"** (2134)	70	70	70	70	70	70	70	65	59	55	51	47	44
(A + B) ÷ 2 = **6'-6"** (1981)	70	70	70	70	70	70	70	70	64	59	56	51	48
(A + B) ÷ 2 = **6'-0"** (1829)	70	70	70	70	70	70	70	70	69	64	59	55	52
(A + B) ÷ 2 = **5'-6"** (1676)	70	70	70	70	70	70	70	70	70	70	62	60	57
(A + B) ÷ 2 = **5'-0"** (1524)	70	70	70	70	70	70	70	70	70	70	70	67	62
(A + B) ÷ 2 = **4'-6"** (1372)	70	70	70	70	70	70	70	70	70	70	70	70	69
(A + B) ÷ 2 = **4'-0"** (1219)	70	70	70	70	70	70	70	70	70	70	70	70	70
(A + B) ÷ 2 = **3'-6"** (1067)	70	70	70	70	70	70	70	70	70	70	70	70	70
(A + B) ÷ 2 = **3'-0"** (914)	70	70	70	70	70	70	70	70	70	70	70	70	70
(A + B) ÷ 2 = **2'-6"** (762)	70	70	70	70	70	70	70	70	70	70	70	70	70
(A + B) ÷ 2 = **2'-0"** (610)	70	70	70	70	70	70	70	70	70	70	70	70	70
(A + B) ÷ 2 = **1'-6"** (457)	70	70	70	70	70	70	70	70	70	70	70	70	70
C = (length of join)	**2'-0"** (610)	**2'-6"** (762)	**3'-0"** (914)	**3'-6"** (1067)	**4'-0"** (1219)	**4'-6"** (1372)	**5'-0"** (1524)	**5'-6"** (1676)	**6'-0"** (1829)	**6'-6"** (1981)	**7'-0"** (2134)	**7'-6"** (2286)	**8'-0"** (2438)

continued on next page

- Numerical values in charts represent structural pressure only.
- Structural performance of any combination is only as high as the lowest structural performance of any individual unit or joining material in the combination.
- Easy Connect and other fiberglass joins are certified up to PG70 when installed according to Andersen installation instructions.
- Andersen® products must be installed and anchored properly according to joining and installation instructions to meet rated structural performance. Refer to product joining and installation instructions at andersenwindows.com.
- Dimensions in parentheses are in millimeters.
- Contact your Andersen supplier for joining windows to patio doors and for specific performance and product recommendations.
- Hinged inswing patio doors with a 6 9/16" (167) or greater exterior extension jamb depth require 7 3/4" (197) fiberglass joining material.

*Two-panel doors shown. Three- and four-panel doors similar with different overall A and B widths.

2-Way Easy Connect Fiberglass Joining continued from previous page

23	20						
24	21						
25	22	20					
26	23	21					
27	24	22	20				
29	26	23	21				
30	27	24	22	20			
32	29	26	23	21			
34	30	27	25	22	20		
36	32	29	26	24	22	20	
39	35	31	28	25	23	21	
42	38	34	30	27	25	23	21
46	41	36	33	30	27	25	23
50	44	40	36	33	30	27	25
55	49	44	40	36	33	30	27
61	54	49	44	40	36	33	30
69	61	55	50	45	41	37	34
70	54	63	57	51	47	43	39
70	70	70	66	60	55	50	46
70	70	70	70	70	66	60	55
70	70	70	70	70	70	70	69
70	70	70	70	70	70	70	70
8'-6" (2591)	**9'-0"** (2743)	**9'-6"** (2896)	**10'-0"** (3048)	**10'-6"** (3200)	**11'-0"** (3353)	**11'-6"** (3505)	**12'-0"** (3658)

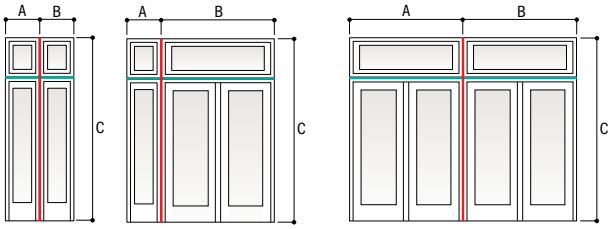

Red lines represent priority join (dimension C in table).

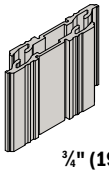

¾" (19) x 5 ¾" (146)
Easy Connect Fiberglass Joining Material
For 4 9/16" (116) base jamb depths.

When joining hinged patio doors, do not join hinge jamb to hinge jamb.

A structural header is required to separate patio door transoms and transom windows from 4-panel gliding patio doors.

2-Way Easy Connect Fiberglass Joining continued from previous page

24	23	22	20								
25	24	23	21	20							
26	25	24	22	21	20						
28	26	25	23	22	21	20					
29	27	26	25	23	22	21	20				
31	29	27	26	25	24	23	22				
32	31	29	27	26	25	24	23	21			
34	32	31	29	28	26	25	24	22	21		
37	34	33	31	29	28	27	26	24	22	20	
39	37	35	33	31	30	29	27	25	23	22	20
42	39	37	35	34	32	31	29	27	25	23	22
45	43	40	38	36	35	33	32	29	27	25	23
49	46	44	41	39	38	36	34	32	29	27	26
53	50	48	45	43	41	39	38	35	32	30	28
59	55	52	50	47	45	43	42	38	35	33	30
65	62	58	55	53	50	48	46	43	39	37	34
70	69	66	62	59	57	54	52	48	44	41	38
70	70	70	70	68	65	62	59	55	51	47	44
70	70	70	70	70	70	70	69	64	59	55	51
70	70	70	70	70	70	70	70	70	70	66	61
70	70	70	70	70	70	70	70	70	70	70	70
70	70	70	70	70	70	70	70	70	70	70	70
8'-6" (2591)	**9'-0"** (2743)	**9'-6"** (2896)	**10'-0"** (3048)	**10'-6"** (3200)	**11'-0"** (3353)	**11'-6"** (3505)	**12'-0"** (3658)	**12'-6"** (3658)	**13'-0"** (3658)	**13'-6"** (3658)	**14'-0"** (3658)

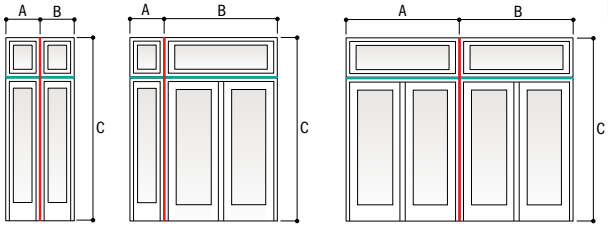

Red lines represent priority join (dimension C in table).

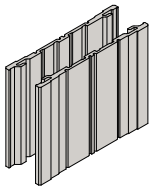

¾" (19) x 7 ¾" (197)
Easy Connect Fiberglass Joining Material
For higher performance for 1-way and 2-way joining. Required for hinged inswing patio doors with 6 9/16" (167) or greater exterior extension jamb depths.

When joining hinged patio doors, do not join hinge jamb to hinge jamb.

A structural header is required to separate patio door transoms and transom windows from 4-panel gliding patio doors.

- Numerical values in charts represent structural pressure only.
- Structural performance of any combination is only as high as the lowest structural performance of any individual unit or joining material in the combination.
- Easy Connect and other fiberglass joins are certified up to PG70 when installed according to Andersen installation instructions.
- Andersen® products must be installed and anchored properly according to joining and installation instructions to meet rated structural performance. Refer to product joining and installation instructions at andersenwindows.com.
- Dimensions in parentheses are in millimeters.
- Contact your Andersen supplier for joining windows to patio doors and for specific performance and product recommendations.
- Hinged inswing patio doors with a 6 9/16" (167) or greater exterior extension jamb depth require 7 ¾" (197) fiberglass joining material.

*Two-panel doors shown. Three- and four-panel doors similar with different overall A and B widths.

Andersen® Window and Patio Door Altitude Limits – Dual-Pane Glass

The chart below gives the altitude limit in feet for most A-Series products in this guide. If the installation of a given product is at an altitude greater than that shown in this chart, a capillary breather tube must be ordered. Be aware that the use of a capillary breather tube eliminates argon gas blend fill and will result in a slightly lower thermal performance (approximately 0.02 increase in window U-Factor). For NFRC certified total unit performance on units with capillary breather tubes for higher altitude applications, please visit **andersenwindows.com/nfrc**.

The use of dual-pane insulating glass at altitudes higher than its rating will result in severe glass distortion, increased glass breakage potential and a risk of seal failure. Smaller windows are most affected by altitude changes. An increase in altitude results in a decrease in atmospheric pressure. A sealed insulating glass unit attempts to combat this change by increasing its volume to reduce its pressure. One way to increase its volume is by glass deflection. A smaller window is stiffer and does not deflect as much as a larger window; therefore, it cannot relieve the pressure as readily. Thus the load applied to the glass is greater, resulting in a greater risk for breakage. Another way the window tries to increase its volume is by increasing the edge area; i.e., the seal area. The increased pressure applied to the edge seal load for smaller windows is therefore greater, increasing the chance for seal failure.

Product	3,000	4,000	5,000	6,000	7,000	8,000	9,000	10,000
A-Series Casement Windows		ACW1820 ACW1824 ACW1828 ACW1830 ACW1834 ACW1838 ACW1840 ACW1844 ACW1848 ACW1850 ACW1854 ACW1858 ACW1860 ACW2020 ACW2024 ACW2028 ACW2030 ACW2034 ACW2420	ACW2038 ACW2040 ACW2044 ACW2048 ACW2050 ACW2054 ACW2058 ACW2060 ACW2424 ACW2428 ACW2430 ACW2434 ACW2438 ACW2440 ACW2624 ACW2824	ACW2444 ACW2448 ACW24250 ACW2454 ACW2458 ACW2460 ACW2628 ACW2630 ACW2634 ACW2638 ACW2640 ACW2644 ACW2660 ACW2828 ACW21028 ACW3028	ACW2648 ACW2650 ACW2654 ACW2658 ACW2830 ACW2834 ACW2838 ACW2840 ACW2844 ACW2848 ACW2854 ACW2858 ACW2860 ACW21030 ACW21034 ACW21038 ACW21040 ACW21044 ACW21048 ACW21050	ACW2850 ACW21054 ACW21058 ACW21060 ACW3030 ACW3034 ACW3038 ACW3040 ACW3044 ACW3048 ACW3050 ACW3054 ACW3058 ACW3060		
A-Series Awning Windows		AAN1814 AAN2014 AAN2414 AAN2614 AAN2814 AAN21014 AAN3014 AAN3214 AAN3414 AAN3814 AAN4014 AAN4414 AAN4814 AAN5014 AAN5414 AAN5814 AAN6014 AAN1818 AAN2018 AAN2418 AAN2618 AAN2818 AAN21018 AAN3018 AAN3218 AAN3418 AAN3818 AAN4018 AAN4418 AAN4818 AAN5018 AAN5418 AAN5818 AAN6018 AAN18110 AAN1820 AAN1824 AAN1828 AAN1830 AAN20110 AAN24110 AAN26110 AAN28110 AAN210110 AAN30110 AAN32110 AAN34110 AAN38110 AAN40110 AAN44110 AAN48110 AAN50110 AAN54110 AAN58110 AAN60110 AAN2020 AAN2420 AAN2620 AAN2820 AAN21020 AAN3220 AAN2024 AAN2028 AAN2030	AAN3420 AAN3820 AAN4020 AAN4420 AAN4820 AAN5020 AAN5420 AAN5820 AAN6020 AAN2424 AAN2624 AAN2824 AAN21024 AAN3024 AAN3224 AAN3424 AAN3824 AAN2428 AAN2430	AAN4024 AAN4424 AAN4824 AAN5024 AAN5424 AAN5824 AAN6024 AAN2628 AAN2630 AAN2828 AAN21028 AAN3028 AAN3228 AAN3428 AAN3828 AAN4028 AAN4428	AAN4828 AAN5028 AAN5428 AAN5828 AAN6028 AAN2830 AAN21030	AAN3030 AAN3230 AAN3430 AAN3830 AAN4030 AAN4430 AAN4830 AAN5030 AAN5830 AAN6030	AAN5430	
A-Series Double-Hung Windows		ADH1830 ADH1834 ADH1838 ADH1840 ADH1844 ADH1848 ADH1850 ADH1854 ADH1858 ADH1860 ADH1864 ADH1868 ADH1874 ADH1880 ADH2030 ADH2034 ADH2038 ADH2040 ADH2048 ADH2050 ADH2054 ADH2058 ADH2060 ADH2064 ADH2430 ADH2434 ADH2438 ADH2630 ADH2634 ADH2638 ADH2830 ADH2834 ADH2838 ADH21030 ADH21034 ADH21038 ADH3030 ADH3034 ADH3038 ADH3230 ADH3234 ADH3238 ADH3430 ADH3434 ADH3438 ADH3830 ADH3834 ADH4030 ADH4034	ADH2068 ADH2074 ADH2080 ADH2440 ADH2444 ADH2448 ADH2450 ADH2454 ADH2458 ADH2460 ADH2464 ADH2468 ADH2474 ADH2640 ADH2644 ADH2840 ADH2844 ADH21040 ADH21044 ADH3040 ADH3044 ADH2840 ADH2844 ADH21040 ADH21044 ADH3040 ADH3044 ADH3240 ADH3244 ADH3440 ADH3444 ADH3838 ADH3840 ADH3844 ADH4038 ADH4040 ADH4044	ADH2480 ADH2648 ADH2650 ADH2654 ADH2658 ADH2660 ADH2664 ADH2668 ADH2674 ADH2680 ADH2848 ADH21048 ADH3048 ADH3248 ADH3448 ADH3848 ADH4048	ADH2850 ADH2854 ADH2858 ADH2860 ADH2864 ADH2868 ADH2874 ADH2880 ADH21050 ADH21054 ADH21058 ADH21060 ADH21064 ADH21068 ADH21074 ADH21080 ADH3050 ADH3054 ADH3250 ADH3450 ADH3454 ADH3850 ADH3854 ADH4050 ADH4054	ADH3058 ADH3060 ADH3064 ADH3068 ADH3074 ADH3080 ADH3258 ADH3260 ADH3264 ADH3268 ADH3274 ADH3280 ADH3458 ADH3460 ADH3858 ADH3860 ADH4058 ADH4060	ADH3464 ADH3468 ADH3474 ADH3480 ADH3864 ADH4064	ADH3868 ADH3874 ADH3880 ADH4068 ADH4074 ADH4080
A-Series Picture Windows		APW1420 APW1424 APW1428 APW1430 APW1434 APW1438 APW1440 APW1448 APW1450 APW1454 APW1458 APW1460 APW1464 APW1468 APW1474 APW1480 APW1820 APW1824 APW1828 APW1830 APW1834 APW1838 APW1840 APW1844 APW1848 APW1850 APW1854 APW1858 APW1860 APW2020 APW2024 APW2028 APW2030 APW2034 APW2038 APW1868 APW1874 APW1880 APW2020 APW2420 APW2620 APW2820 APW21020 APW3020 APW3220	APW3420 APW3820 APW4020 APW4420 APW4820 APW5020 APW5420 APW5820 APW6020 APW6420 APW6820 APW7020 APW7420 APW7820 APW8020 APW2024 APW2028 APW2030 APW2034 APW2038 APW2040 APW2044 APW2048 APW2050 APW2054 APW2058 APW2060 APW2064 APW2068 APW2074 APW2080 APW2424 APW2624 APW2824 APW21024 APW3024 APW3224 APW3424 APW3824 APW4024	APW4424 APW4824 APW5024 APW5424 APW5824 APW6024 APW6424 APW6824 APW7024 APW7424 APW7824 APW8024 APW2428 APW2430 APW2434 APW2438 APW2440 APW2460 APW2464 APW2468 APW2474 APW2480 APW2628 APW2630 APW2634 APW2638 APW2640 APW2644	APW2444 APW2448 APW2450 APW2454 APW2458 APW2648 APW2650 APW2654 APW2658 APW2660 APW2664 APW2668 APW2674 APW2680 APW2828 APW21028 APW3028 APW3228 APW3428 APW3828 APW4028 APW4428 APW4828 APW6028 APW6428 APW6828 APW7028 APW7428 APW7828 APW8028 APW2830 APW2834 APW2838 APW2840 APW2844 APW2848 APW2854 APW2858 APW2860 APW2864 APW2868 APW2874 APW2880	APW5028 APW5428 APW5828 APW2850 APW21030 APW21034 APW21038 APW21040 APW21044 APW21048 APW21050 APW21054 APW21058 APW21060 APW21064 APW21068 APW21074 APW21080 APW3030 APW3230 APW3430 APW3830 APW4030 APW4430 APW4830 APW5030 APW5430 APW6030 APW6430 APW6830 APW7030 APW7430 APW7830 APW8030 APW3034 APW3038 APW3040 APW3044 APW3048 APW3050 APW3054	APW5830 APW3058 APW3060 APW3064 APW3068 APW3074 APW3080 APW3234 APW3238 APW3240 APW3244 APW3248 APW3250 APW3254 APW3258 APW3260 APW3264 APW3268 APW3274 APW3280 APW3434 APW3834 APW4034 APW4434 APW4834 APW5034 APW5434 APW5834 APW3438 APW3440 APW3444 APW3448 APW3450 APW3454 APW3458 APW3460	APW6034 APW6434 APW6834 APW7034 APW7434 APW7834 APW8034 APW3464 APW3468 APW3474 APW3480 APW3838 APW4038 APW4438 APW4838 APW5038 APW5438 APW5838 APW6038 APW6438 APW6838 APW7038 APW7438 APW7838 APW8038 APW3840 APW3844 APW3848 APW3850 APW3854 APW3858 APW3860 APW3864 APW3868 APW3874 APW3880 APW4040 APW4440 APW4840 APW5040 APW5440 APW5840 APW6040 APW6440 APW6840 APW7040 APW7440 APW7840 APW8040 APW4044 APW4048 APW4050 APW4054 APW4058 APW4060 APW4064 APW4068 APW4074 APW4080 APW4444 APW4448 APW4450 APW4454 APW4458 APW4460 APW4464 APW4468 APW4474 APW4480 APW4844 APW4848 APW4850 APW4854 APW4858 APW4860 APW4864	APW4868 APW4874 APW4880 APW5044 APW5048 APW5050 APW5054 APW5058 APW5060 APW5064 APW5068 APW5074 APW5080 APW5444 APW5448 APW5450 APW5458 APW5460 APW5464 APW5468 APW5474 APW5844 APW5848 APW5850 APW5854 APW5858 APW5860 APW5864 APW5868 APW6044 APW6048 APW6050 APW6054 APW6058 APW6060 APW6064 APW6068 APW6444	APW6448 APW6450 APW6454 APW6458 APW6460 APW6844 APW6848 APW6850 APW6854 APW6858 APW6860 APW7044 APW7048 APW7050 APW7054 APW7058 APW7060 APW7444 APW7448 APW7450 APW7454 APW7458 APW7460 APW7844 APW7848 APW7850 APW7854 APW7858 APW7860 APW8044 APW8048 APW8050 APW8054 APW8058 APW8060

continued on next page

•Deflection of glass will occur on units with larger glass areas. If interior/exterior grilles are used on double-hung windows, gliding windows or gliding patio doors, some interference may occur, affecting operation of these units.
•Altitude limits for patio doors shown in two-panel configurations. These limits also qualify for same size panels used in single or multiple panel configurations.
•Contact your Andersen supplier for altitude limits for custom-sized windows and doors.

Andersen® Window and Patio Door Altitude Limits – Dual-Pane Glass *(continued)*

Product	3,000	4,000				5,000		6,000		7,000		8,000	9,000	10,000
A-Series Fixed Transom Windows	ATF8010 ATF8014	ATF1410 ATF1810 ATF2010 ATF2410 ATF2610 ATF2810 ATF210210 ATF3010 ATF3210 ATF3410 ATF3810 ATF4010 ATF4410 ATF4810 ATF5010 ATF5410 ATF5810 ATF6010 ATF6410 ATF6810 ATF7010 ATF7410 ATF7810 ATF1414 ATF1416 ATF1418 ATF1420 ATF1422 ATF1424 ATF1426	ATF1428 ATF1430 ATF1434 ATF1814 ATF2014 ATF2414 ATF2614 ATF2814 ATF21014 ATF3014 ATF3214 ATF3414 ATF4014 ATF4414 ATF4814 ATF5014 ATF5414 ATF5814 ATF6014 ATF6414 ATF6814 ATF7014 ATF7414 ATF7814 ATF1816 ATF2016 ATF2416 ATF2616	ATF21016 ATF3016 ATF3216 ATF3416 ATF3816 ATF4016 ATF4416 ATF4816 ATF5016 ATF5416 ATF5816 ATF6016 ATF6416 ATF6816 ATF7016 ATF7416 ATF7816 ATF8016 ATF1818 ATF18110 ATF1820 ATF1822 ATF1824 ATF1826 ATF1828 ATF1830 ATF1834 ATF2018 ATF2418 ATF2618	ATF2818 ATF21018 ATF3018 ATF3218 ATF3418 ATF3818 ATF4018 ATF4418 ATF4818 ATF5018 ATF5418 ATF5818 ATF6018 ATF6418 ATF6818 ATF7018 ATF7418 ATF7818 ATF8018 ATF20110 ATF24110 ATF26110 ATF28110 ATF210110 ATF30110 ATF32110 ATF74110 ATF78110	ATF34110 ATF38110 ATF40110 ATF44110 ATF48110 ATF50110 ATF54110 ATF58110 ATF60110 ATF64110 ATF68110 ATF70110 ATF80110 ATF2020 ATF2022 ATF2024 ATF2026 ATF2028 ATF2030 ATF2034 ATF2420 ATF2620 ATF2820 ATF21020 ATF3020 ATF3220	ATF3420 ATF3820 ATF4020 ATF4420 ATF4820 ATF5020 ATF5420 ATF5820 ATF6020 ATF6420 ATF6820 ATF7020 ATF7420 ATF7820 ATF8020 ATF2422 ATF2622 ATF2822 ATF3022 ATF3222 ATF3422 ATF3822 ATF7422 ATF7822	ATF4022 ATF4422 ATF4822 ATF5022 ATF5422 ATF5822 ATF6022 ATF6422 ATF6822 ATF7022 ATF8022 ATF2424 ATF2426 ATF2428 ATF2430 ATF2434 ATF2624 ATF2824 ATF21024 ATF3024 ATF3224 ATF3424	ATF3824 ATF4024 ATF6024 ATF6424 ATF6824 ATF7024 ATF7424 ATF7824 ATF8024 ATF2626 ATF2628 ATF2630 ATF2634 ATF2826 ATF21026 ATF3026 ATF3226 ATF3426 ATF3826 ATF4026 ATF4426	ATF4424 ATF4824 ATF5024 ATF5424 ATF5824 ATF4826 ATF5026 ATF5426 ATF5826 ATF6026 ATF6426 ATF6826 ATF7026 ATF7426 ATF7826 ATF8026 ATF2828 ATF2830	ATF2834 ATF21028 ATF3028 ATF3228 ATF3428 ATF3828 ATF4028 ATF4428 ATF4828 ATF5428 ATF5828 ATF6028 ATF6428 ATF6828 ATF7028 ATF7428 ATF7828 ATF8028	ATF5028 ATF21030 ATF21034 ATF3030 ATF3230 ATF3430 ATF3830 ATF4030 ATF4430 ATF4830 ATF5030 ATF5430 ATF3034	ATF5830 ATF6030 ATF6430 ATF6830 ATF7030 ATF7430 ATF7830 ATF8030 ATF3234 ATF3434 ATF3834 ATF4034 ATF4434 ATF4834 ATF5034 ATF5434 ATF5834 ATF6034	ATF6434 ATF6834 ATF7034 ATF7434 ATF7834 ATF8034
A-Series Venting Transom Windows		ATV1814 ATV2014 ATV2214 ATV2414 ATV2614 ATV2814 ATV21014 ATV3014 ATV3214 ATV3414 ATV3814 ATV4014 ATV4414 ATV4814 ATV5014 ATV5414 ATV5814 ATV6014 ATV1816 ATV2016 ATV2216 ATV2416 ATV2616	ATV2816 ATV21016 ATV3016 ATV3216 ATV3416 ATV3816 ATV4016 ATV4416 ATV4816 ATV5016 ATV5416 ATV5816 ATV6016 ATV1818 ATV18110 ATV1820 ATV1822 ATV1824 ATV1826 ATV1828 ATV2018 ATV2218 ATV2418	ATV2618 ATV2818 ATV21018 ATV3018 ATV3218 ATV3418 ATV3818 ATV4018 ATV4418 ATV4818 ATV5018 ATV5418 ATV5818 ATV6018 ATV20110 ATV22110 ATV24110 ATV26110 ATV28110 ATV210110 ATV30110 ATV32110 ATV34110	ATV38110 ATV40110 ATV44110 ATV48110 ATV50110 ATV54110 ATV58110 ATV60110 ATV2020 ATV2022 ATV2024 ATV2026 ATV2028 ATV2420 ATV2620 ATV2820 ATV21020 ATV3020 ATV3220 ATV3420	ATV3820 ATV4020 ATV4420 ATV4820 ATV5020 ATV5420 ATV5820 ATV6020 ATV2422 ATV2622 ATV2822 ATV21022 ATV3022 ATV3222 ATV3422 ATV3822 ATV4022	ATV4422 ATV4822 ATV5022 ATV5422 ATV5822 ATV6022 ATV2424 ATV2426 ATV2428 ATV2624 ATV2824 ATV21024 ATV3024 ATV3224 ATV3424 ATV3824 ATV4024	ATV4424 ATV4824 ATV5024 ATV5424 ATV5824 ATV6024 ATV2626 ATV2628 ATV2826	ATV21026 ATV3026 ATV3226 ATV3426 ATV3826 ATV4026 ATV4426 ATV5826 ATV6026	ATV4826 ATV5026 ATV5426 ATV2828 ATV21028 ATV3028 ATV3228 ATV3428	ATV3828 ATV4028 ATV4428 ATV4828 ATV5428 ATV5828 ATV6028	ATV5028		

Product	3,000	4,000					5,000		6,000	7,000
A-Series Patio Door Transoms Sash-Set	FWTD-1-81110 FWTD-1-9610 FWTD-1-81114 FWTD-1-9614	FWTD-1-2110 FWTD-1-2710 FWTD-1-2910 FWTD-1-3110 FWTD-1-3310 FWTD-2-4010 FWTD-2-5010 FWTD-2-5410 FWTD-2-6010 FWTD-2-6410 FWTD-3-7110 FWTD-3-81110 FWTD-3-9610 FWTD-1-4010 FWTD-1-5010 FWTD-1-5410 FWTD-1-6010	FWTD-1-6410 FWTD-1-7010 FWTD-1-71110 FWTD-1-8010 FWTD-1-2114 FWTD-1-2714 FWTD-1-2914 FWTD-1-3114 FWTD-1-3314 FWTD-2-4014 FWTD-2-5014 FWTD-2-5414 FWTD-2-6014 FWTD-2-6414 FWTD-3-7114 FWTD-3-81114 FWTD-3-9614	FWTD-1-4014 FWTD-1-5014 FWTD-1-5414 FWTD-1-6014 FWTD-1-6414 FWTD-1-7014 FWTD-1-71114 FWTD-1-8014 FWTD-1-2118 FWTD-1-2718 FWTD-1-2918 FWTD-1-3118 FWTD-1-3318 FWTD-2-4018 FWTD-2-5018 FWTD-2-5418 FWTD-2-6018	FWTD-2-6418 FWTD-3-7118 FWTD-3-81118 FWTD-3-9618 FWTD-1-4018 FWTD-1-5018 FWTD-1-5418 FWTD-1-6018 FWTD-1-6418 FWTD-1-7018 FWTD-1-71118 FWTD-1-8018 FWTD-1-81118 FWTD-1-9618 FWTD-1-2120 FWTD-1-2720 FWTD-1-2920	FWTD-1-3120 FWTD-1-3320 FWTD-2-4020 FWTD-2-5020 FWTD-2-5420 FWTD-2-6020 FWTD-2-6420 FWTD-3-7120 FWTD-3-81120 FWTD-3-9620 FWTD-1-5420 FWTD-1-6020 FWTD-1-6420 FWTD-1-7020 FWTD-1-2124 FWTD-2-4024	FWTD-1-4020 FWTD1-15020 FWTD-1-71120 FWTD-1-8020 FWTD-1-81120 FWTD-1-9620 FWTD-1-2724 FWTD-1-2924 FWTD-1-3124 FWTD-1-3324 FWTD-2-5024	FWTD-2-5424 FWTD-2-6024 FWTD-2-6424 FWTD-3-7124 FWTD-3-81124 FWTD-3-9624 FWTD-1-4024 FWTD-1-5024 FWTD-1-5424 FWTD-1-6024	FWTD-1-6424 FWTD-1-7024 FWTD-1-71124 FWTD-1-8024 FWTD-1-81124 FWTD-1-9624	
A-Series Patio Door Transoms Direct-Set	FWTDS81110 FWTDS9610	FWTDS2110 FWTDS2710 FWTDS2910 FWTDS3110 FWTDS3310 FWTDS4010 FWTDS5010 FWTDS5410 FWTDS6010	FWTDS6410 FWTDS7010 FWTDS71110 FWTDS8010 FWTDS2114 FWTDS2714 FWTDS2914 FWTDS3114 FWTDS3314	FWTDS4014 FWTDS5014 FWTDS5414 FWTDS6014 FWTDS6414 FWTDS7014 FWTDS71114 FWTDS8014 FWTDS81114	FWTDS9614 FWTDS2118 FWTDS2718 FWTDS2918 FWTDS5018 FWTDS5418 FWTDS6018 FWTDS6418		FWTDS3118 FWTDS3318 FWTDS4018 FWTDS7018 FWTDS71118 FWTDS8018 FWTDS81118 FWTDS9618 FWTDS2120	FWTDS2720 FWTDS2920 FWTDS3120 FWTDS3320 FWTDS4020 FWTDS5020 FWTDS5420 FWTDS2124	FWTDS6020 FWTDS6420 FWTDS7020 FWTDS71120 FWTDS8020 FWTDS81120 FWTDS9620 FWTDS2724 FWTDS2924 FWTDS3124	FWTDS3324 FWTDS4024 FWTDS5024 FWTDS5424 FWTDS6024 FWTDS6424 FWTDS7024 FWTDS71124 FWTDS8024 FWTDS81124
A-Series Patio Door Sidelight Transoms		FWSLTD-1-1310 FWSLTD-1-1710 FWSLTD-1-1314 FWSLTD-1-1714 FWSLTD-1-1318	FWSLTD-1-1718 FWSLTD-1-1320 FWSLTD-1-1720 FWSLTD-1-1324 FWSLTD-1-1724	FWSTDS1310 FWSTDS1710 FWSTDS1314 FWSTDS1714 FWSTDS1318	FWSTDS1718 FWSTDS1320 FWSTDS1720 FWSTDS1324 FWSTDS1724					
A-Series Patio Door Sidelights							FWSLD1368 FWSLD13611 FWSLD1380	FWSLD1768 FWSLD17611 FWSLD1780		

Product	8,000	10,000					
A-Series Patio Doors	FWHID2168 FWHID21611 FWHID2180 FWOD2168 FWOD21611 FWOD2180	FWGD2968 FWGD29611 FWGD2980 FWGD3368 FWGD33611 FWGD3380 FWGD3968	FWGD39611 FWGD3980 FWGD4368 FWGD43611 FWGD4380 FWGD-3-91068 FWGD-3-910611	FWGD-3-91080 FWGD-3-111068 FWGD-3-1110611 FWGD-3-111080 FWHID2768 FWHID27611 FWHID2780	FWHID2968 FWHID29611 FWHID2980 FWHID3168 FWHID31611 FWHID3180 FWHID3368	FWHID33611 FWHID3380 FWOD2768 FWOD27611 FWOD2780 FWOD2968 FWOD29611	FWOD2980 FWOD3168 FWOD31611 FWOD3180 FWOD3368 FWOD33611 FWOD3380

•Deflection of glass will occur on units with larger glass areas. If interior/exterior grilles are used on double-hung windows, gliding windows or gliding patio doors, some interference may occur, affecting operation of these units.
•Altitude limits for patio doors shown in two-panel configurations. These limits also qualify for same size panels used in single or multiple panel configurations.
•**Contact your Andersen supplier for altitude limits for custom-sized windows and doors.**

Andersen® Window and Patio Door Altitude Limits – Triple-Pane Glass

The chart below gives the altitude limit in feet for most A-Series products in this guide. If the installation of a given product is at an altitude greater than that shown in this chart, a capillary breather tube must be ordered. Be aware that the use of a capillary breather tube eliminates argon gas blend fill and will result in a slightly lower thermal performance (approximately 0.02 increase in window U-Factor). For NFRC certified total unit performance on units with capillary breather tubes for higher altitude applications, please visit **andersenwindows.com/nfrc**.

The use of triple-pane insulating glass at altitudes higher than its rating will result in severe glass distortion, increased glass breakage potential and a risk of seal failure. Smaller windows are most affected by altitude changes. An increase in altitude results in a decrease in atmospheric pressure. A sealed insulating glass unit attempts to combat this change by increasing its volume to reduce its pressure. One way to increase its volume is by glass deflection. A smaller window is stiffer and does not deflect as much as a larger window; therefore, it cannot relieve the pressure as readily. Thus the load applied to the glass is greater, resulting in a greater risk for breakage. Another way the window tries to increase its volume is by increasing the edge area; i.e., the seal area. The increased pressure applied to the edge seal load for smaller windows is therefore greater, increasing the chance for seal failure.

Product	3,000	4,000				5,000		6,000			7,000		8,000		9,000		10,000	
A-Series Casement Windows		ACW1820	ACW1848	ACW2028	ACW2054	ACW2428	ACW2628	ACW2648	ACW2840	ACW21048	ACW2850	ACW3034	ACW3058					
		ACW1824	ACW1850	ACW2030	ACW2058	ACW2430	ACW2630	ACW2650	ACW2844	ACW21050	ACW2854	ACW3038	ACW3060					
		ACW1828	ACW1854	ACW2034	ACW2060	ACW2434	ACW2634	ACW2654	ACW2848	ACW3030	ACW2858	ACW3040						
		ACW1830	ACW1858	ACW2038	ACW2424	ACW2438	ACW2638	ACW2658	ACW21030	ACW21044	ACW2860	ACW3044						
		ACW1834	ACW1860	ACW2040	ACW2624	ACW2440	ACW2640	ACW2660	ACW21034	ACW21048	ACW21054	ACW3048						
		ACW1838	ACW2020	ACW2044	ACW2824	ACW2448	ACW2644	ACW2830	ACW21038	ACW21050	ACW21058	ACW3050						
		ACW1840	ACW2420	ACW2048		ACW2450	ACW2828	ACW2834	ACW21040	ACW3030	ACW21060	ACW3054						
		ACW1844	ACW2024	ACW2050		ACW2454	ACW21028	ACW2838	ACW21044									
						ACW2458	ACW3028											
						ACW2460												
A-Series Awning Windows	AAN1814	AAN1818	AAN18110	AAN50110	AAN5420	AAN4024	AAN2630	AAN4828	AAN3230				AAN5430					
	AAN2014	AAN2018	AAN1820	AAN54110	AAN5820	AAN4424	AAN2828	AAN5028	AAN3430				AAN5830					
	AAN2414	AAN2418	AAN1824	AAN58110	AAN6020	AAN4824	AAN21028	AAN5428	AAN3830				AAN6030					
	AAN2614	AAN2618	AAN1828	AAN60110	AAN2024	AAN5024	AAN3028	AAN5828	AAN4030									
	AAN2814	AAN2818	AAN1830	AAN2020	AAN2028	AAN5424	AAN3228	AAN6028	AAN4430									
	AAN21014	AAN21018	AAN20110	AAN2420	AAN2030	AAN5824	AAN3428	AAN2830	AAN4830									
	AAN3014	AAN3018	AAN24110	AAN2620	AAN2424	AAN6024	AAN3828	AAN21030	AAN5030									
	AAN3214	AAN3218	AAN26110	AAN2820	AAN2624	AAN2428	AAN4028	AAN3030										
	AAN3414	AAN3418	AAN28110	AAN21020	AAN2824	AAN2430	AAN4428											
	AAN3814	AAN3818	AAN210110	AAN3020	AAN21024	AAN2628												
	AAN4014	AAN4018	AAN30110	AAN3220	AAN3024													
	AAN4414	AAN4418	AAN32110	AAN3420	AAN3224													
	AAN4814	AAN4818	AAN34110	AAN3820	AAN3424													
	AAN5014	AAN5018	AAN38110	AAN4020	AAN3824													
	AAN5414	AAN5418	AAN40110	AAN4420														
	AAN5814	AAN5818	AAN44110	AAN4820														
	AAN6014	AAN6018	AAN48110	AAN5020														
A-Series Double-Hung Windows		ADH1830	ADH2630	ADH3834	ADH2838	ADH4040	ADH4044	ADH2850	ADH4050		ADH3058	ADH4058	ADH3464	ADH3864	ADH3874		ADH4074	
		ADH1834	ADH2830	ADH4034	ADH21038	ADH2444	ADH2648	ADH2854	ADH21054		ADH3060	ADH3260	ADH3468	ADH4064	ADH3880		ADH4080	
		ADH1838	ADH21030	ADH2038	ADH3038	ADH2448	ADH2650	ADH2858	ADH21058		ADH3064	ADH3264	ADH3474	ADH3868				
		ADH1840	ADH3030	ADH2040	ADH3238	ADH2450	ADH2654	ADH2860	ADH21060		ADH3068	ADH3268	ADH3480	ADH4068				
		ADH1844	ADH3230	ADH2044	ADH3438	ADH2454	ADH2658	ADH2864	ADH21064		ADH3074	ADH3274						
		ADH1848	ADH3430	ADH2048	ADH3838	ADH2458	ADH2660	ADH2868	ADH21068		ADH3080	ADH3280						
		ADH1850	ADH3830	ADH2050	ADH4038	ADH2460	ADH2664	ADH2874	ADH21074		ADH3258	ADH3460						
		ADH1854	ADH4030	ADH2054	ADH2440	ADH2464	ADH2668	ADH2880	ADH21080		ADH3458	ADH3860						
		ADH1858	ADH2034	ADH2058	ADH2640	ADH2468	ADH2674	ADH21050	ADH3054		ADH3858	ADH4060						
		ADH1860	ADH2434	ADH2060	ADH2840	ADH2474	ADH2680	ADH3050	ADH3254									
		ADH1864	ADH2634	ADH2064	ADH21040	ADH2480	ADH2848	ADH3250	ADH3454									
		ADH1868	ADH2834	ADH2068	ADH3040	ADH2644	ADH21048	ADH3450	ADH3854									
		ADH1874	ADH21034	ADH2074	ADH3240	ADH2844	ADH3048	ADH3850	ADH4054									
		ADH1880	ADH3034	ADH2080	ADH3440	ADH21044	ADH3248											
		ADH2030	ADH3234	ADH2438	ADH3840	ADH3044	ADH3448											
		ADH2430	ADH3434	ADH2638		ADH3244	ADH3848											
						ADH3444	ADH4048											
						ADH3844												
		3,000		4,000														
A-Series Picture Windows	APW1414	APW1458	APW1834	APW2020	APW2048	APW4424	APW2658	APW5028	APW21070		APW5830	APW3438	APW6434	APW3868	APW4040	APW5444	APW4448	APW6458
	APW1814	APW1460	APW1838	APW2420	APW2050	APW4824	APW2660	APW5428	APW21074		APW6030	APW3440	APW6834	APW7440	APW4440	APW5844	APW4450	APW6858
	APW2014	APW1464	APW1840	APW2620	APW2054	APW5024	APW2664	APW5828	APW3030		APW6430	APW3444	APW3464	APW7840	APW4840	APW6044	APW4454	APW7058
	APW2414	APW1468	APW1844	APW2820	APW2058	APW5424	APW2668	APW6028	APW3230		APW6830	APW3448	APW3468	APW8040	APW5040	APW6444	APW4458	APW7458
	APW2614	APW1470	APW1848	APW21020	APW2060	APW5824	APW2670	APW6428	APW3430		APW7030	APW3450	APW3838	APW4078	APW5440	APW6844	APW4460	APW7858
	APW2814	APW1474	APW1850	APW3020	APW2064	APW6024	APW2674	APW6828	APW3830		APW3058	APW3454	APW4038	APW4080	APW5840	APW8044	APW4464	APW8058
	APW21014	APW1478	APW1854	APW3220	APW2068	APW6424	APW2678	APW7028	APW4030		APW3060	APW3458	APW4438	APW4470	APW6040	APW6050	APW4468	APW5460
	APW3014	APW1480	APW1858	APW3420	APW2070	APW6824	APW2680	APW7428	APW4430		APW3064	APW3460	APW4838	APW4474	APW6440	APW6450	APW4848	APW5860
	APW3214	APW1818	APW1860	APW3820	APW2074	APW7024	APW2828	APW7828	APW4830		APW3068	APW3470	APW5038	APW4478	APW6840	APW6850	APW5048	APW6060
	APW3414	APW2018	APW1864	APW4020	APW2078	APW7424	APW21028	APW2850	APW5030		APW3070	APW3474	APW5438	APW4480	APW4044	APW7050	APW5448	APW6460
	APW3814	APW2218	APW1868	APW4420	APW2080	APW7824	APW3028	APW2854	APW5430		APW3260	APW3478	APW5838	APW6448	APW4048	APW7450	APW5848	APW6860
	APW4014	APW2418	APW1870	APW4820	APW2424	APW2444	APW3228	APW2858	APW3034		APW3264	APW3480	APW6038	APW6848	APW4050	APW7850	APW6048	APW7060
	APW4414	APW2618	APW1874	APW5020	APW2624	APW2448	APW3428	APW2860	APW3038		APW3268	APW7038	APW6438	APW7048	APW4054	APW8050	APW4850	APW7460
	APW4814	APW2818	APW1878	APW5420	APW2824	APW2450	APW3828	APW2864	APW3040		APW3434	APW7438	APW6838	APW7448	APW4058	APW5060	APW4854	APW7860
	APW5014	APW21018	APW1880	APW5820	APW21024	APW2454	APW4028	APW2868	APW3044		APW3834	APW7838	APW3840	APW7848	APW4060	APW5064	APW4858	APW8060
	APW5414	APW3018	APW20110	APW6020	APW3024	APW2458	APW4428	APW2870	APW3048		APW4034	APW8038	APW3844	APW8048	APW4064	APW5068	APW4860	APW5464
	APW5814	APW3218	APW24110	APW6420	APW3224	APW2460	APW4828	APW2874	APW3050		APW4434	APW3870	APW3848	APW4864	APW4068	APW5070	APW5050	APW5864
	APW6014	APW3418	APW26110	APW6820	APW3424	APW2464	APW2830	APW2878	APW3054		APW4834	APW3874	APW3850	APW4868	APW4070	APW5074	APW5450	APW6064
	APW6414	APW3818	APW28110	APW7020	APW3824	APW2468	APW2834	APW2880	APW3234		APW5034	APW3878	APW3854	APW4870	APW4444	APW5078	APW5850	APW5468
	APW6814	APW4018	APW30110	APW7420	APW4024	APW2470	APW2838	APW21030	APW3238		APW5434	APW3880	APW3858	APW4874	APW4844	APW5080	APW5054	APW5868
	APW7014	APW4418	APW32110	APW7820	APW8024	APW2474	APW2840	APW21034	APW3240		APW5834	APW7040	APW3860	APW4878	APW5044		APW5058	APW6068
	APW7414	APW4818	APW34110	APW2024	APW2428	APW2478	APW2844	APW21038	APW3244		APW6034	APW4074	APW3864	APW4880			APW5454	APW5470
	APW7814	APW5018	APW38110	APW2028	APW2430	APW2480	APW2848	APW21040	APW3248		APW7034	APW7044					APW5854	APW5870
	APW8014	APW5418	APW40110	APW2030	APW2434	APW2628	APW21078	APW21044	APW3250		APW7434	APW7444					APW6054	APW6070
	APW1418	APW5818	APW44110	APW2034	APW2438	APW2630	APW21080	APW21048	APW3254		APW7834	APW7844					APW6454	APW5474
	APW14110	APW6018	APW48110	APW2038	APW2440	APW2634	APW7430	APW21050	APW3258		APW8034						APW6854	APW5874
	APW1420	APW6418	APW50110	APW2040	APW8028	APW2638	APW7830	APW21054	APW3270								APW7054	APW6074
	APW1424	APW6818	APW54110	APW2044		APW2640	APW8030	APW21058	APW3274								APW7454	APW5478
	APW1428	APW7018	APW58110			APW2644	APW3074	APW21060	APW3278								APW7854	APW5878
	APW1430	APW7418	APW60110			APW2648	APW3078	APW21064	APW3280								APW8054	APW6078
	APW1434	APW7818	APW64110			APW2650	APW3080	APW21068									APW5458	APW5480
	APW1438	APW8018	APW68110			APW2654											APW5858	APW5880
	APW1440	APW18110	APW70110														APW6058	APW6080
	APW1444	APW1820	APW74110															
	APW1448	APW1824	APW78110															
	APW1450	APW1828	APW80110															
	APW1454	APW1830	APW8020															

continued on next page

•Deflection of glass will occur on units with larger glass areas. If interior/exterior grilles are used on double-hung windows, gliding windows or gliding patio doors, some interference may occur, affecting operation of these units.
•Altitude limits for patio doors shown in two-panel configurations. These limits also qualify for same size panels used in single or multiple panel configurations.
•Contact your Andersen supplier for altitude limits for custom-sized windows and doors.

Andersen® Window and Patio Door Altitude Limits – Triple-Pane Glass *(continued)*

Product	3,000	4,000	5,000	6,000	7,000	8,000	9,000	10,000
A-Series Fixed Transom Windows	ATF1410 ATF1810 ATF2010 ATF2410 ATF2610 ATF2810 ATF21010 ATF3010 ATF3210 ATF3410 ATF3810 ATF4010 ATF4410 ATF4810 ATF5010 ATF5410 ATF5810 ATF6010 ATF6410 ATF6810 ATF7010 ATF7410 ATF7810 ATF8010 ATF1414 ATF1814 ATF2014 ATF2414 ATF2614 ATF2814 ATF21014 ATF3014 ATF3214 ATF3414 ATF3814 ATF4014 ATF4414 ATF4814 ATF5014 ATF5414 ATF5814 ATF6014 ATF6414 ATF6814 ATF7014 ATF7414 ATF7814 ATF8014 ATF1416 ATF1418 ATF14110 ATF1420 ATF1422 ATF1424 ATF1426 ATF1428 ATF1430 ATF1434 ATF1438 ATF1440 ATF1444 ATF1448 ATF1450 ATF1454 ATF1458 ATF1460 ATF1464 ATF1468 ATF1470 ATF1474 ATF1478 ATF1480 ATF1816 ATF2016 ATF2416 ATF2616 ATF2816 ATF21016 ATF3016 ATF3216 ATF3416 ATF3816 ATF4016 ATF4416 ATF4816 ATF5016 ATF5416 ATF5816 ATF6016 ATF6416 ATF6816 ATF7016 ATF7416 ATF7816 ATF8016 ATF1818 ATF2018 ATF2418 ATF2618 ATF2818 ATF21018 ATF3018 ATF3218 ATF3418 ATF3818 ATF4018 ATF4418 ATF4818 ATF5018 ATF1820 ATF1822 ATF1824 ATF1826 ATF1828 ATF1830 ATF1834 ATF1838 ATF1840 ATF1844 ATF1848 ATF1850 ATF1854 ATF1858 ATF1860 ATF1864 ATF1868 ATF1870 ATF1874 ATF1878 ATF1880 ATF8020	ATF20110 ATF24110 ATF26110 ATF28110 ATF210110 ATF30110 ATF32110 ATF34110 ATF38110 ATF40110 ATF44110 ATF48110 ATF50110 ATF54110 ATF58110 ATF60110 ATF64110 ATF68110 ATF70110 ATF74110 ATF78110 ATF80110 ATF2020 ATF2420 ATF2620 ATF2820 ATF21020 ATF3020 ATF3220 ATF3420 ATF3820 ATF4020 ATF4420 ATF4820 ATF5020 ATF5420 ATF5820 ATF6020 ATF6420 ATF6820 ATF7020 ATF7420 ATF7820 ATF8020 ATF2022 ATF2024 ATF2026 ATF2028 ATF2040 ATF2044 ATF2048 ATF2050 ATF2054 ATF2058 ATF2060 ATF2064 ATF2068 ATF2070 ATF2074 ATF2078 ATF2080 ATF2422 ATF2622 ATF2822 ATF2022 ATF2222 ATF2422 ATF2622 ATF2822 ATF3022 ATF3222 ATF3422 ATF3622 ATF3822 ATF4022 ATF4222 ATF4422 ATF4622 ATF4822 ATF5022 ATF5222 ATF5422 ATF5622 ATF5822 ATF6022 ATF6222 ATF6422 ATF6622 ATF6822 ATF7022 ATF7222 ATF7422 ATF7622 ATF7822 ATF8022 ATF2424 ATF2624 ATF2824 ATF21024 ATF3024 ATF3224 ATF3424 ATF3824 ATF4024 ATF4224 ATF4424 ATF4824 ATF5024 ATF5224 ATF5424 ATF5824 ATF6024 ATF6224 ATF6424 ATF6824 ATF7024 ATF7224 ATF7424 ATF7824 ATF8024 ATF2426 ATF2626 ATF2826 ATF21026 ATF3026 ATF3226 ATF3426 ATF3826 ATF4026 ATF4226 ATF4426 ATF4826 ATF5026 ATF5226 ATF5426 ATF5826 ATF6026 ATF6226 ATF6426 ATF6826 ATF7026 ATF7226 ATF7426 ATF7826 ATF8026 ATF2428 ATF2628 ATF2828 ATF21028 ATF3028 ATF3228 ATF3428 ATF3828 ATF4028 ATF4228 ATF4428 ATF4828 ATF5028 ATF5228 ATF5428 ATF5828 ATF6028 ATF6228 ATF6428 ATF6828 ATF7028 ATF7228 ATF7428 ATF7828 ATF8028 ATF2430 ATF2630 ATF2830 ATF21030 ATF3030 ATF3230 ATF3430 ATF3830 ATF4030 ATF4230 ATF4430 ATF4830 ATF5030 ATF5230 ATF5430 ATF5830 ATF6030 ATF6230 ATF6430 ATF6830 ATF7030 ATF7230 ATF7430 ATF7830 ATF8030 ATF2432 ATF2632 ATF2832 ATF21032 ATF3032 ATF3232 ATF3432 ATF3832 ATF4032 ATF4232 ATF4432 ATF4832 ATF5032 ATF5232 ATF5432 ATF5832 ATF6032 ATF6232 ATF6432 ATF6832 ATF7032 ATF7232 ATF7432 ATF7832 ATF8032 ATF2434 ATF2634 ATF2834 ATF21034 ATF3034 ATF3234 ATF3434 ATF3834 ATF4034 ATF4234 ATF4434 ATF4834 ATF5034 ATF5234 ATF5434 ATF5834 ATF6034 ATF6234 ATF6434 ATF6834 ATF7034 ATF7234 ATF7434 ATF7834 ATF8034 ATF2436 ATF2636 ATF2836 ATF21036 ATF3036 ATF3236 ATF3436 ATF3836 ATF4036 ATF4236 ATF4436 ATF4836 ATF5036 ATF5236 ATF5436 ATF5836 ATF6036 ATF6236 ATF6436 ATF6836 ATF7036 ATF7236 ATF7436 ATF7836 ATF8036 ATF2438 ATF2638 ATF2838 ATF21038 ATF3038 ATF3238 ATF3438 ATF3838 ATF4038 ATF4238 ATF4438 ATF4838 ATF5038 ATF5238 ATF5438 ATF5838 ATF6038 ATF6238 ATF6438 ATF6838 ATF7038 ATF7238 ATF7438 ATF7838 ATF8038 ATF2440 ATF2640 ATF2840 ATF21040 ATF3040 ATF3240 ATF3440 ATF3840 ATF4040 ATF4240 ATF4440 ATF4840 ATF5040 ATF5240 ATF5440 ATF5840 ATF6040 ATF6240 ATF6440 ATF6840 ATF7040 ATF7240 ATF7440 ATF7840 ATF8040 ATF2442 ATF2642 ATF2842 ATF21042 ATF3042 ATF3242 ATF3442 ATF3842 ATF4042 ATF4242 ATF4442 ATF4842 ATF5042 ATF5242 ATF5442 ATF5842 ATF6042 ATF6242 ATF6442 ATF6842 ATF7042 ATF7242 ATF7442 ATF7842 ATF8042 ATF2444 ATF2644 ATF2844 ATF21044 ATF3044 ATF3244 ATF3444 ATF3844 ATF4044 ATF4244 ATF4444 ATF4844 ATF5044 ATF5244 ATF5444 ATF5844 ATF6044 ATF6244 ATF6444 ATF6844 ATF7044 ATF7244 ATF7444 ATF7844 ATF8044 ATF2446 ATF2646 ATF2846 ATF21046 ATF3046 ATF3246 ATF3446 ATF3846 ATF4046 ATF4246 ATF4446 ATF4846 ATF5046 ATF5246 ATF5446 ATF5846 ATF6046 ATF6246 ATF6446 ATF6846 ATF7046 ATF7246 ATF7446 ATF7846 ATF8046 ATF2448 ATF2648 ATF2848 ATF21048 ATF3048 ATF3248 ATF3448 ATF3848 ATF4048 ATF4248 ATF4448 ATF4848 ATF5048 ATF5248 ATF5448 ATF5848 ATF6048 ATF6248 ATF6448 ATF6848 ATF7048 ATF7248 ATF7448 ATF7848 ATF8048 ATF2450 ATF2650 ATF2850 ATF21050 ATF3050 ATF3250 ATF3450 ATF3850 ATF4050 ATF4250 ATF4450 ATF4850 ATF5050 ATF5250 ATF5450 ATF5850 ATF6050 ATF6250 ATF6450 ATF6850 ATF7050 ATF7250 ATF7450 ATF7850 ATF8050 ATF2452 ATF2652 ATF2852 ATF21052 ATF3052 ATF3252 ATF3452 ATF3852 ATF4052 ATF4252 ATF4452 ATF4852 ATF5052 ATF5252 ATF5452 ATF5852 ATF6052 ATF6252 ATF6452 ATF6852 ATF7052 ATF7252 ATF7452 ATF7852 ATF2454 ATF2654 ATF2854 ATF21054 ATF3054 ATF3254 ATF3454 ATF3854 ATF4054 ATF4254 ATF4454 ATF4854 ATF5054 ATF5254 ATF5454 ATF5854 ATF6054 ATF6254 ATF6454 ATF6854 ATF7054 ATF7254 ATF7454 ATF7854 ATF2456 ATF2656 ATF2856 ATF21056 ATF3056 ATF3256 ATF3456 ATF3856 ATF4056 ATF4256 ATF4456 ATF4856 ATF5056 ATF5256 ATF5456 ATF5856 ATF6056 ATF6256 ATF6456 ATF6856 ATF7056 ATF7256 ATF7456 ATF7856 ATF2458 ATF2658 ATF2858 ATF21058 ATF3058 ATF3258 ATF3458 ATF3858 ATF4058 ATF4258 ATF4458 ATF4858 ATF5058 ATF5258 ATF5458 ATF5858 ATF6058 ATF6258 ATF6458 ATF6858 ATF7058 ATF7258 ATF7458 ATF7858 ATF2460 ATF2660 ATF2860 ATF21060 ATF3060 ATF3260 ATF3460 ATF3860 ATF4060 ATF4260 ATF4460 ATF4860 ATF5060 ATF5260 ATF5460 ATF5860 ATF6060 ATF6260 ATF6460 ATF6860 ATF7060 ATF7260 ATF7460 ATF7860 ATF2462 ATF2662 ATF2862 ATF21062 ATF3062 ATF3262 ATF3462 ATF3862 ATF4062 ATF4262 ATF4462 ATF4862 ATF5062 ATF5262 ATF5462 ATF5862 ATF6062 ATF6262 ATF6462 ATF6862 ATF7062 ATF7262 ATF7462 ATF7862 ATF2464 ATF2664 ATF2864 ATF21064 ATF3064 ATF3264 ATF3464 ATF3864 ATF4064 ATF4264 ATF4464 ATF4864 ATF5064 ATF5264 ATF5464 ATF5864 ATF6064 ATF6264 ATF6464 ATF6864 ATF7064 ATF7264 ATF7464 ATF7864 ATF2466 ATF2666 ATF2866 ATF21066 ATF3066 ATF3266 ATF3466 ATF3866 ATF4066 ATF4266 ATF4466 ATF4866 ATF5066 ATF5266 ATF5466 ATF5866 ATF6066 ATF6266 ATF6466 ATF6866 ATF7066 ATF7266 ATF7466 ATF7866 ATF2468 ATF2668 ATF2868 ATF21068 ATF3068 ATF3268 ATF3468 ATF3868 ATF4068 ATF4268 ATF4468 ATF4868 ATF5068 ATF5268 ATF5468 ATF5868 ATF6068 ATF6268 ATF6468 ATF6868 ATF7068 ATF7268 ATF7468 ATF7868 ATF2470 ATF2670 ATF2870 ATF21070 ATF3070 ATF3270 ATF3470 ATF3870 ATF4070 ATF4270 ATF4470 ATF4870 ATF5070 ATF5270 ATF5470 ATF5870 ATF6070 ATF6270 ATF6470 ATF6870 ATF7070 ATF7270 ATF7470 ATF7870 ATF2472 ATF2672 ATF2872 ATF21072 ATF3072 ATF3272 ATF3472 ATF3872 ATF4072 ATF4272 ATF4472 ATF4872 ATF5072 ATF5272 ATF5472 ATF5872 ATF6072 ATF6272 ATF6472 ATF6872 ATF7072 ATF7272 ATF7472 ATF7872 ATF2474 ATF2674 ATF2874 ATF21074 ATF3074 ATF3274 ATF3474 ATF3874 ATF4074 ATF4274 ATF4474 ATF4874 ATF5074 ATF5274 ATF5474 ATF5874 ATF6074 ATF6274 ATF6474 ATF6874 ATF7074 ATF7274 ATF7474 ATF7874 ATF2476 ATF2676 ATF2876 ATF21076 ATF3076 ATF3276 ATF3476 ATF3876 ATF4076 ATF4276 ATF4476 ATF4876 ATF5076 ATF5276 ATF5476 ATF5876 ATF6076 ATF6276 ATF6476 ATF6876 ATF7076 ATF7276 ATF7476 ATF7876 ATF2478 ATF2678 ATF2878 ATF21078 ATF3078 ATF3278 ATF3478 ATF3878 ATF4078 ATF4278 ATF4478 ATF4878 ATF5078 ATF5278 ATF5478 ATF5878 ATF6078 ATF6278 ATF6478 ATF6878 ATF7078 ATF7278 ATF7478 ATF7878 ATF2480 ATF2680 ATF2880 ATF21080 ATF3080 ATF3280 ATF3480 ATF3880 ATF4080 ATF4280 ATF4480 ATF4880 ATF5080 ATF5280 ATF5480 ATF5880 ATF6080 ATF6280 ATF6480 ATF6880 ATF7080 ATF7280 ATF7480 ATF7880	ATF3464 ATF3468 ATF6434 ATF6834 ATF3838 ATF3840 ATF3844 ATF3848 ATF3850 ATF3854 ATF3858 ATF3860 ATF3864 ATF3868 ATF4038 ATF4438 ATF4838 ATF5038 ATF5438 ATF5838 ATF6038 ATF6438 ATF6838 ATF4078 ATF4080 ATF7840 ATF8040 ATF7444 ATF7844 ATF8044 ATF4478 ATF4480 ATF7044 ATF4864 ATF4868 ATF4870 ATF4874 ATF4878 ATF4880 ATF6448 ATF6848 ATF7048 ATF7448 ATF7848 ATF8048	ATF3870 ATF4040 ATF4044 ATF4048 ATF4050 ATF4054 ATF4058 ATF4060 ATF4064 ATF4068 ATF4070 ATF4440 ATF4840 ATF5040 ATF5440 ATF5840 ATF6040 ATF6440 ATF6840 ATF5060 ATF5064 ATF5068 ATF5070 ATF5074 ATF5078 ATF5080 ATF6050 ATF6450 ATF6850 ATF7050 ATF7450 ATF7850 ATF8050	ATF4444 ATF4448 ATF4450 ATF4454 ATF4458 ATF4460 ATF4464 ATF4468 ATF4844 ATF5044 ATF5444 ATF5844 ATF6044 ATF6444 ATF6844 ATF4848 ATF4850 ATF4854 ATF4858 ATF5860 ATF5864 ATF5868 ATF5870 ATF5874 ATF5878 ATF5880 ATF6054 ATF6058 ATF6060 ATF6064 ATF6068 ATF6070 ATF6074 ATF6078 ATF6080 ATF6454 ATF6458 ATF6460 ATF6854 ATF6858 ATF6860 ATF7054 ATF7058 ATF7060 ATF7454 ATF7458 ATF7460 ATF7854 ATF7858 ATF7860 ATF8054 ATF8058 ATF8060
A-Series Venting Transom Windows	**3,000** ATV1814 ATV2014 ATV2414 ATV2614 ATV2814 ATV21014 ATV3014 ATV3214 ATV3414 ATV3814 ATV4014 ATV4414 ATV4814 ATV5014 ATV5414 ATV5814 ATV6014 ATV1816 ATV2016 ATV2416 ATV2616 ATV2816 ATV21016 ATV3016 ATV3216 ATV3416 ATV3816 ATV4016 ATV4416 ATV4816 ATV5016 ATV5416 ATV5816 ATV6016 ATV1818 ATV2018 ATV2418 ATV2618 ATV2818 ATV21018 ATV3018	**4,000** ATV3218 ATV3418 ATV3818 ATV4018 ATV4418 ATV4818 ATV5018 ATV5418 ATV5818 ATV6018 ATV18110 ATV1820 ATV1822 ATV1824 ATV1826 ATV1828 ATV20110 ATV24110 ATV26110 ATV28110 ATV210110 ATV30110 ATV32110 ATV34110 ATV38110 ATV40110 ATV44110 ATV48110 ATV50110 ATV54110 ATV58110 ATV60110 ATV2020 ATV2420 ATV2620 ATV2820	ATV21020 ATV3020 ATV3220 ATV3420 ATV3820 ATV4020 ATV4420 ATV4820 ATV5020 ATV5420 ATV5820 ATV6020 ATV2022 ATV2024 ATV2026 ATV2028 ATV2422 ATV2622 ATV2822 ATV21022 ATV3022 ATV3222 ATV3422 ATV3822 ATV4022 ATV4222 ATV4422 ATV4622 ATV4822 ATV5022 ATV5222 ATV5422 ATV5622 ATV5822 ATV6022 ATV2424 ATV2624 ATV2824 ATV21024 ATV3024	**5,000** ATV3224 ATV3424 ATV3824 ATV4024 ATV4424 ATV4824 ATV5024 ATV5424 ATV5824 ATV6024 ATV2426 ATV2428 ATV2626 ATV2826 ATV21026 ATV3026 ATV3226 ATV3426 ATV3826 ATV4026 ATV4426 ATV4826 ATV2628	**6,000** ATV5026 ATV5426 ATV5826 ATV2828 ATV21028 ATV3028 ATV3228 ATV3428 ATV3828 ATV4028 ATV4428 ATV4828	**7,000** ATV5028 ATV5428 ATV5828			
A-Series Patio Door Transoms Sash-Set	**3,000** FWTD-1-2110 FWTD-1-2710 FWTD-1-2910 FWTD-1-3110 FWTD-1-3310 FWTD-1-4010 FWTD-1-5010 FWTD-1-5410 FWTD-1-6010 FWTD-1-6410 FWTD-1-7010 FWTD-1-81110 FWTD-1-9610 FWTD-1-2114 FWTD-1-2714 FWTD-1-2914 FWTD-1-3114 FWTD-1-3314 FWTD-1-4014 FWTD-1-5014 FWTD-1-5414 FWTD-1-6014 FWTD-1-6414 FWTD-1-7014 FWTD-1-81114 FWTD-1-9614 FWTD-1-81118 FWTD-1-9618 FWTD-2-4010 FWTD-2-5010 FWTD-2-5410 FWTD-2-6010 FWTD-2-6410 FWTD-2-4014 FWTD-2-5014 FWTD-2-5414 FWTD-2-6014 FWTD-2-6414 FWTD-3-7110 FWTD-3-81110 FWTD-3-9610 FWTD-3-7114 FWTD-3-81114 FWTD-3-9614	**4,000** FWTD-1-71110 FWTD-1-8010 FWTD-1-71114 FWTD-1-8014 FWTD-1-2118 FWTD-1-2718 FWTD-1-2918 FWTD-1-3118 FWTD-1-3318 FWTD-1-4018 FWTD-1-5018 FWTD-1-5418 FWTD-1-6018 FWTD-1-6418 FWTD-1-7018 FWTD-1-71118 FWTD-1-8018 FWTD-1-2120 FWTD-1-2720 FWTD-1-3120 FWTD-1-3320 FWTD-1-4020 FWTD-1-5020 FWTD-1-5420 FWTD-1-6020 FWTD-1-6420 FWTD-1-7020 FWTD-1-71120 FWTD-1-8020 FWTD-1-81120 FWTD-1-9620 FWTD-1-2124 FWTD-1-2724 FWTD-1-2924 FWTD-1-3124 FWTD-1-3324 FWTD-1-4024 FWTD-2-4018 FWTD-2-5018 FWTD-2-5418 FWTD-2-6018 FWTD-2-6418 FWTD-2-4020 FWTD-2-5020 FWTD-2-5420 FWTD-2-6020 FWTD-2-6420 FWTD-2-4024 FWTD-2-5024 FWTD-2-5424 FWTD-2-6024 FWTD-2-6424 FWTD-3-7118 FWTD-3-81118 FWTD-3-9618 FWTD-3-7120 FWTD-3-81120 FWTD-3-9620 FWTD-3-7124 FWTD-3-81124 FWTD-3-9624	**5,000** FWTD-1-5024 FWTD-1-5424 FWTD-1-6024 FWTD-1-6424 FWTD-1-7024 FWTD-1-71124 FWTD-1-8024 FWTD-1-81124 FWTD-1-9624			
A-Series Patio Door Transoms Direct-Set	FWTDS2110 FWTDS2710 FWTDS2910 FWTDS3110 FWTDS3310 FWTDS4010 FWTDS5010 FWTDS5410 FWTDS6010 FWTDS6410 FWTDS7010 FWTDS81110 FWTDS9610 FWTDS81114 FWTDS9614	FWTDS71110 FWTDS8010 FWTDS2114 FWTDS2714 FWTDS2914 FWTDS3114 FWTDS3314 FWTDS4014 FWTDS5014 FWTDS5414 FWTDS6014 FWTDS6414 FWTDS7014 FWTDS71114 FWTDS8014 FWTDS2118 FWTDS2718 FWTDS2918 FWTDS3118 FWTDS3318 FWTDS4018 FWTDS5018 FWTDS5418 FWTDS6018 FWTDS6418 FWTDS7018 FWTDS71118 FWTDS8018 FWTDS81118 FWTDS9618 FWTDS2120 FWTDS2720 FWTDS2920 FWTDS3120 FWTDS3320	FWTDS4020 FWTDS5020 FWTDS5420 FWTDS6020 FWTDS6420 FWTDS7020 FWTDS71120 WTDS8020 FWTDS81120 FWTDS9620 FWTDS2124 FWTDS2724 FWTDS2924 FWTDS3124 FWTDS3324 FWTDS4024 FWTDS5024 FWTDS5424 FWTDS6024 FWTDS6424 FWTDS7024 FWTDS71124 FWTDS8024			
A-Series Patio Door Sidelight Transoms	FWSLTD-1-1310 FWSTDS-1-1310 FWSLTD-1-1710 FWSTDS-1-1710 FWSLTD-1-1314 FWSLTD-1-1714	FWSTDS-1-1314 FWSTDS-1-1714 FWSLTD-1-1318 FWSLTD-1-1718 FWSTDS-1-1318 FWSTDS-1-1718 FWSLTD-1-1320 FWSTDS-1-1320 FWSLTD-1-1720 FWSTDS-1-1720 FWSLTD-1-1324 FWSTDS-1-1324 FWSLTD-1-1724 FWSTDS-1-1724					
A-Series Patio Door Sidelights	FWSLD1368 FWSLD13611 FWSLD1380	FWSLD1768 FWSLD17611 FWSLD1780					
A-Series Patio Doors	**7,000** FWOD2168 FWOD21611 FWOD2180 FWOD4068 FWHID2168 FWHID21611 FWHID2180 FWOD4068 FWOD40611 FWOD4080 FWHID4068 FWHID40611 FWHID4080	**10,000** FWGD2968 FWGD29611 FWGD2980 FWGD5068 FWGD50611 FWGD5080 FWGD91068 FWGD910611 FWGD91080 FWGD-4-91068 FWGD-4-910611 FWGD-4-91080 FWGD3368 FWGD33611 FWGD3380 FWGD6068 FWGD60611 FWGD6080 FWGD111068 FWGD1110611 FWGD111080 FWGD-4-111068 FWGD-4-1110611 FWGD-4-111080 FWGD3968 FWGD39611 FWGD3980 FWGD7068 FWGD70611 FWGD7080 FWGD4368 FWGD43611 FWGD4380 FWGD8068 FWGD80611 FWGD8080 FWGD-4-151068 FWGD-4-1510611 FWGD-4-151080 FWOD2768 FWOD27611 FWOD2780 FWHID2768 FWHID27611 FWHID2780 FWOD5068 FWOD50611 FWOD5080 FWHID5068 FWHID50611 FWHID5080 FWOD2968 FWOD29611 FWOD2980 FWHID2968 FWHID29611 FWHID2980 FWOD5468 FWOD54611 FWOD5480 FWHID5468 FWHID54611 FWHID5480 FWHID71168 FWHID711611 FWHID71180 FWOD3168 FWOD31611 FWOD3180 FWHID3168 FWHID31611 FWHID3180 FWOD6068 FWOD60611 FWOD6080 FWHID6068 FWHID60611 FWHID6080 FWHID81168 FWHID811611 FWHID81180 FWOD3368 FWOD33611 FWOD3380 FWHID3368 FWHID33611 FWHID3380 FWOD6468 FWOD64611 FWOD6464 FWOD64611 FWOD6464 FWHID6468 FWHID64611 FWHID6464 FWHID9668 FWHID96611 FWHID9680					

•Deflection of glass will occur on units with larger glass areas. If interior/exterior grilles are used on double-hung windows, gliding windows or gliding patio doors, some interference may occur, affecting operation of these units.
•Altitude limits for patio doors shown in two-panel configurations. These limits also qualify for same size panels used in single or multiple panel configurations.
•**Contact your Andersen supplier for altitude limits for custom-sized windows and doors.**

PERFORMANCE STANDARDS

The Window and Door Manufacturers Association (WDMA), the American Architectural Manufacturers Association (AAMA) and the Canadian Standards Association (CSA) jointly release the North American Fenestration Standard/Specification for Windows, Doors and Skylights (NAFS-11) where "-11" refers to the most recent publication year of 2011. NAFS is also referred to as AAMA/WDMA/CSA 101/I.S.2/A440, which is how the International Code Council (ICC) lists this standard in the 2012, 2015 and 2018 International Residential Code (IRC) and International Building Code (IBC) as the means to indicate the window, door or skylights design pressure rating used to determine compliance to the job site design pressure requirements.

A product only achieves a "Performance Grade" or "PG" rating when it complies with all of the NAFS performance requirements such as ease of operation, air infiltration resistance, resistance to water penetration and resistance to forced entry, etc. A "Design Pressure Rating" or "DP" rating only depicts the design and structural load performance.

Performance Classes

The NAFS Standard/Specification defines requirements for four performance classes. Performance classes are designated R, LC, CW and AW. This classification system provides for several levels of performance. Product selection is always based on the performance and building code requirements of the particular project.

Elements of Performance Grade (PG) Designations

In order to qualify for a given performance grade (PG), test specimens need to pass all required performance tests for the following, in addition to all required auxiliary (durability) and applicable material/component tests (not shown here) for the applicable product type and desired performance class:

(a) Operating force (if applicable): Maximum operating force varies by product type and performance class.

(b) Air leakage resistance: Tested in accordance with ASTM E283 at a test pressure of 1.57 psf. Allowable air infiltration for R, LC and CW class designations is 0.3 cubic feet per minute per square foot of frame (cfm/ft^2).

(c) Water penetration resistance: Tested in accordance with ASTM E547 with the specified test pressure applied per NAFS-11. Test consists of four cycles. Each cycle consists of five minutes with pressure applied and one minute with the pressure released, during which the water spray is continuously applied. Water spray shall be uniformly applied at a constant rate of 5 U.S. gal/ft^2 · hr.

(d) Uniform load deflection test: Tested in accordance with ASTM E330 for both positive and negative pressure (pressure defined by NAFS-11) with the load maintained for a period of 10 seconds. The test specimen shall be evaluated for deflection during each load for permanent damage after each load and for any effects on the normal operation of the specimen. *Starting with the 2008 version of NAFS, design pressure (DP) will only represent the "uniform load deflection test."*

(e) Uniform load structural test: Tested in accordance with ASTM E330 for both positive and negative pressure (pressure defined by NAFS-11) with the load maintained for a period of 10 seconds. After loads are removed, there shall be no permanent deformation in excess of 0.4% of its span and no damage to the unit, which would make it inoperable.

(f) Forced-entry resistance (if applicable): Tested in accordance with ASTM F588 (windows), F476 (swinging doors) and F842 (sliding doors) at a performance level 10 rating.

Performance Grades (PG) and Corresponding Test Pressures (psf)

Performance Class/ Performance Grade		Air Infiltration Test Pressure		Maximum Allowable Air Infiltration/ Exfiltration Rate		Water Penetration Resistance Test Pressure		Design Pressure		Structural Test Pressure	
R	LC	Pa	psf	L/s·m^2	cfm/ft^2	Pa	psf	Pa	psf	Pa	psf
15	-	75	1.57	1.5	0.30	140	2.92	720	15.04	1080	22.56
20	-	75	1.57	1.5	0.30	150	3.13	960	20.05	1440	30.08
25	25	75	1.57	1.5	0.30	180	3.76	1200	25.06	1800	37.59
30	30	75	1.57	1.5	0.30	220	4.59	1440	30.08	2160	45.11
35	35	75	1.57	1.5	0.30	260	5.43	1680	35.09	2520	52.63
40	40	75	1.57	1.5	0.30	290	6.06	1920	40.10	2880	60.15
45	45	75	1.57	1.5	0.30	330	6.89	2160	45.11	3240	67.67
50	50	75	1.57	1.5	0.30	360	7.52	2400	50.13	3600	75.19
55	55	75	1.57	1.5	0.30	400	8.35	2640	55.14	3960	82.71
60	60	75	1.57	1.5	0.30	440	9.19	2880	60.15	4320	90.23
65	65	75	1.57	1.5	0.30	470	9.82	3120	65.16	4680	97.74
70	70	75	1.57	1.5	0.30	510	10.65	3360	70.18	5040	105.26
75	75	75	1.57	1.5	0.30	540	11.28	3600	75.19	5400	112.78
80	80	75	1.57	1.5	0.30	580	12.11	3840	80.20	5760	120.30
85	85	75	1.57	1.5	0.30	620	12.94	4080	85.21	6120	127.82
90	90	75	1.57	1.5	0.30	660	13.78	4320	90.23	6480	135.34
95	95	75	1.57	1.5	0.30	682	14.25	4560	95.24	6840	142.86
100	100	75	1.57	1.5	0.30	718	15.00	4800	100.25	7200	150.38

HALLMARK CERTIFICATION

The Window and Door Manufacturers Association (WDMA)-sponsored Hallmark Certification Program provides manufacturers with certification to the AAMA/WDMA/CSA 101/I.S.2/A440-11 Standard and is designed to provide builders, architects, specifiers and consumers with an easily recognizable means of identifying products that have been manufactured and tested in accordance with NAFS (AAMA/WDMA/CSA 101/I.S.2/A440) industry standards and other applicable performance standards. Conformance is determined by periodic in-plant inspections by a third-party administrator. Inspections include auditing licensee quality control procedures and processes, and a review to confirm products are manufactured in accordance with the appropriate performance standards. Periodic testing of representative product constructions and components by an independent testing laboratory is also required. When all of the program requirements are met, the licensee is authorized to use the WDMA Hallmark registered logo on their certification label as a means of identifying products and their performance ratings.

Products successfully obtaining Hallmark Certification will be labeled with a three-part code, which includes performance class, performance grade and size tested. In addition to this mandatory requirement, you are allowed to list the design pressure on a separate line.

WINDOW & DOOR MANUFACTURERS ASSOCIATION WDMA Hallmark Certified www.wdma.com	Andersen Corporation A-SERIES CASEMENT WINDOW Manufacturer stipulates certification as indicated below.
STANDARD	RATING
AAMA/WDMA/CSA 101/I.S.2/A440-11	CLASS LC(1) – PG50(2) – SIZE TESTED 35.3 x 71.3 in.(3) DP+50/-50(4)
AAMA/WDMA/CSA 101/I.S.2/A440-08	CLASS LC(1) – PG50(2) – SIZE TESTED 35.3 x 71.3 in.(3) DP+50/-50(4)

(1) – Performance Class

(2) – Performance Grade

(3) – Size Tested

(4) – Design Pressure

In the example above, the performance class is LC, the performance grade (PG) is 50 pounds per square foot (psf) and the size tested is 35.3" x 71.3". What this means to the specifier is, based on the performance grade chart, the laboratory-tested air infiltration was less than 0.3 cfm/ft^2 (test pressure is always 1.57 psf and the allowable airflow is 0.3 cfm/ft^2), the product tested successfully resisted a laboratory water penetration test at a test pressure of 7.5 psf, the product tested successfully withstood a laboratory positive test pressure of 75 psf and a laboratory negative test pressure of 75 psf, and the product tested passed the laboratory requirements for operational force and forced-entry resistance. Based on this test, all products of the same design that are smaller than the tested size can be labeled with this product performance rating.

IMPORTANT

Building codes prescribe design pressure based on a variety of criteria (i.e., windspeed zone, building height, building type, job site exposure, etc.). Design pressures derived from Performance Grade (PG) test requirements should be used to determine compliance to building code required design pressures. Structural test pressures, which are tested at 1.5 times the design pressure, should **not** be used for determining design pressure code compliance. In the example above, a PG 50 performance grade rating, which passes a 50 psf design pressure, should be used for determining code compliance, not the structural test pressure of 75 psf.

If you need further details about how Andersen® products perform to this standard, contact your Andersen supplier.

If you need further information about the AAMA/WDMA/CSA 101/I.S.2/A440-11 standard or the Hallmark Certification Program, please contact: WDMA, 2001 K Street NW, 3rd Floor North, Washington, D.C. 20006. Phone: 202-367-1157. Website: **wdma.com**

Where designated, Andersen products are tested, certified and labeled to the requirements of the Hallmark Certification Program. Actual performance may vary based on variations in manufacturing, shipping, installation, environmental conditions and conditions of use.

Performance Grade and Air Infiltration – A-Series Windows and Patio Doors

For current performance information, please visit **andersenwindows.com**.

Andersen® Product	Glass Construction	AAMA/WDMA/CSA 101/I.S.2/A440 Performance Grade (PG)	+/- Corresponding Design Pressure (DP)	Air Infiltration CFM/FT²
Casement Windows				
Casement (venting/stationary)	Dual-Pane	Class LC-PG50 Size Tested 47" x 95"	50/50	< 0.2
Casement, PG Upgrade (venting/stationary)	Dual-Pane	Class LC-PG70 Size Tested 35" x 95"	70/70	< 0.2
Casement, PG Upgrade (stationary)	Dual-Pane	Class LC-PG70 Size Tested 47" x 47"	70/70	< 0.2
Casement, PG Upgrade (stationary)	Dual-Pane	Class LC-PG60 Size Tested 47" x 95"	60/60	< 0.2
Casement, PG Upgrade (venting)	Dual-Pane	Class LC-PG60 Size Tested 47" x 46"	60/60	< 0.2
Casement, PG Upgrade (venting)	Dual-Pane	Class LC-PG70 Size Tested 47" x 47"	70/70	< 0.2
Casement, PG Upgrade (venting)	Dual-Pane	Class LC-PG60 Size Tested 39" x 95"	60/60	< 0.2
Casement, PG Upgrade (venting)	Dual-Pane	Class LC-PG60 Size Tested 41" x 71"	60/60	< 0.2
Awning Windows				
Awning (venting/stationary)	Dual-Pane	Class LC-PG50 Size Tested 71" x 47"	50/50	< 0.2
Awning, PG Upgrade (stationary)	Dual-Pane	Class LC-PG70 Size Tested 71" x 47"	70/70	< 0.2
Awning, PG Upgrade (venting)	Dual-Pane	Class LC-PG70 Size Tested 47" x 47"	70/70	< 0.2
Awning, PG Upgrade (venting)	Dual-Pane	Class LC-PG60 Size Tested 59" x 47"	60/60	< 0.2
Awning, PG Upgrade (venting)	Dual-Pane	Class LC-PG60 Size Tested 71" x 31"	60/60	< 0.2
Double-Hung Windows				
Double-Hung	Dual-Pane	Class LC-PG50 Size Tested 47" x 95"	50/50	< 0.2
Double-Hung, PG Upgrade	Dual-Pane	Class LC-PG70 Size Tested 47" x 95"	70/70	< 0.2
Picture Windows				
Picture	Dual-Pane	Class LC-PG50 Size Tested 71" x 95"	50/50	< 0.2
Picture, PG Upgrade	Dual-Pane	Class LC-PG70 Size Tested 71" x 95"	70/70	< 0.2
Transom Windows				
Fixed Transom	Dual-Pane	Class LC-PG50 Size Tested 71" x 95"	50/50	< 0.2
Fixed Transom, PG Upgrade	Dual-Pane	Class LC-PG70 Size Tested 71" x 95"	70/70	< 0.2
Venting Transom	Dual-Pane	Class LC-PG50 Size Tested 71" x 31"	50/50	< 0.2
Venting Transom, PG Upgrade (stationary)	Dual-Pane	Class LC-PG70 Size Tested 71" x 31"	70/70	< 0.2
Venting Transom, PG Upgrade (venting)	Dual-Pane	Class LC-PG70 Size Tested 59" x 31"	70/70	< 0.2
Venting Transom, PG Upgrade (venting)	Dual-Pane	Class LC-PG60 Size Tested 71" x 31"	60/60	< 0.2
Direct-Set Specialty Windows				
Rectangle	Dual-Pane	Class LC-PG50 Size Tested 125" x 84"	50/50	< 0.2
Rectangle, PG Upgrade	Dual-Pane	Class LC-PG70 Size Tested 125" x 84"	70/70	< 0.2
Arch	Dual-Pane	Class LC-PG50 Size Tested 125" x 84"	50/50	< 0.2
Arch, PG Upgrade	Dual-Pane	Class LC-PG70 Size Tested 125" x 84"	70/70	< 0.2
Springline™	Dual-Pane	Class LC-PG50 Size Tested 84" x 125"	50/50	< 0.2
Springline, PG Upgrade	Dual-Pane	Class LC-PG70 Size Tested 84" x 125"	70/70	< 0.2
Sash-Set Specialty Windows				
Rectangular	Dual-Pane	Class LC-PG50 Size Tested 125" x 75"	50/50	< 0.2
Rectangular, PG Upgrade	Dual-Pane	Class LC-PG70 Size Tested 125" x 75"	70/70	< 0.2
Arch	Dual-Pane	Class LC-PG50 Size Tested 125" x 75"	50/50	< 0.2
Arch, PG Upgrade	Dual-Pane	Class LC-PG70 Size Tested 125" x 75"	70/70	< 0.2
Springline™	Dual-Pane	Class LC-PG50 Size Tested 75" x 125"	50/50	< 0.2
Springline, PG Upgrade	Dual-Pane	Class LC-PG70 Size Tested 75" x 125"	70/70	< 0.2
Complementary Casement Windows				
Casement (venting)	Dual-Pane	Class LC-PG50 Size Tested 35" x 84"	50/50	< 0.2
Casement (stationary)	Dual-Pane	Class LC-PG60 Size Tested 120" x 78"	60/60	< 0.2
French Casement (venting)	Dual-Pane	Class LC-PG30 Size Tested 56" x 72"	30/30	< 0.2

For sound transmission ratings, see page 214.

continued on next page

- "Performance Grade (PG)" ratings may vary from tested performance rating for larger or smaller units of a particular type.
- This data is accurate as of November 2022. Due to ongoing product changes, updated test results, or new industry standards, this data may change over time.
- Where designated, Andersen products are certified and labeled to the requirements of the Hallmark Certification Program. Actual performance may vary based on variations in manufacturing, shipping, installation, environmental conditions and conditions of use.
- Contact your Andersen supplier for more information.

Performance Grade and Air Infiltration – A-Series Windows and Patio Doors *(continued)*

For current performance information, please visit **andersenwindows.com**.

Andersen® Product	Glass Construction	AAMA/WDMA/CSA 101/I.S.2/A440 Performance Grade (PG)	+/- Corresponding Design Pressure (DP)	Air Infiltration CFM/FT^2
Gliding Patio Doors				
Single Stationary (611, 80, 100)	Dual-Pane	Class LC-PG45 Size Tested 50" x 119"	45/45	< 0.2
Single Stationary, PG Upgrade (611, 80)	Dual-Pane	Class LC-PG65 Size Tested 50" x 95"	65/80	< 0.2
Single Stationary, PG Upgrade (100)	Dual-Pane	Class LC-PG55 Size Tested 50" x 119"	55/55	< 0.2
Two-Panel (611, 80)	Dual-Pane	Class LC-PG50 Size Tested 95" x 95"	50/50	< 0.2
Two-Panel (100)	Dual-Pane	Class LC-PG45 Size Tested 95" x 119"	45/45	< 0.2
Two-Panel, PG Upgrade (611)	Dual-Pane	Class LC-PG70 Size Tested 95" x 82"	70/80	< 0.2
Two-Panel, PG Upgrade (80)	Dual-Pane	Class LC-PG70 Size Tested 95" x 95"	70/70	< 0.2
Two-Panel, PG Upgrade (100)	Dual-Pane	Class LC-PG55 Size Tested 95" x 119"	55/55	< 0.2
Three-Panel (611)	Dual-Pane	Class LC-PG50 Size Tested 141" x 82"	50/50	< 0.2
Three-Panel (80, 100)	Dual-Pane	Class LC-PG40 Size Tested 141" x 119"	40/40	< 0.2
Three-Panel, PG Upgrade (611)	Dual-Pane	Class LC-PG65 Size Tested 141" x 82"	65/70	< 0.2
Three-Panel, PG Upgrade (80, 100)	Dual-Pane	Class LC-PG50 Size Tested 141" x 119"	50/50	< 0.2
Four-Panel (611)	Dual-Pane	Class LC-PG50 Size Tested 189" x 82"	50/50	< 0.2
Four-Panel (80, 100)	Dual-Pane	Class LC-PG40 Size Tested 189" x 119"	40/40	< 0.2
Four-Panel, PG Upgrade (611)	Dual-Pane	Class LC-PG65 Size Tested 189" x 82"	65/70	< 0.2
Four-Panel, PG Upgrade (80, 100)	Dual-Pane	Class LC-PG50 Size Tested 189" x 119"	50/50	< 0.2
Hinged Inswing Patio Doors				
Single Stationary (611, 80, 100)	Dual-Pane	Class LC-PG45 Size Tested 38" x 119"	45/55	< 0.2
Single Stationary, PG Upgrade (611)	Dual-Pane	Class LC-PG65 Size Tested 38" x 82"	65/80	< 0.2
Single Stationary, PG Upgrade (80, 100)	Dual-Pane	Class LC-PG65 Size Tested 38" x 119"	65/70	< 0.2
Single Active (611, 80, 100)	Dual-Pane	Class LC-PG45 Size Tested 38" x 119"	45/55	< 0.2
Single Active, PG Upgrade (611)	Dual-Pane	Class LC-PG65 Size Tested 38" x 82"	65/80	< 0.2
Single Active, PG Upgrade (80, 100)	Dual-Pane	Class LC-PG65 Size Tested 38" x 119"	65/70	< 0.2
Two-Panel AP/PA (611, 80, 100)	Dual-Pane	Class LC-PG45 Size Tested 75" x 119"	45/55	< 0.2
Two-Panel AP/PA, PG Upgrade (611)	Dual-Pane	Class LC-PG65 Size Tested 75" x 82"	65/80	< 0.2
Two-Panel AP/PA, PG Upgrade (80)	Dual-Pane	Class LC-PG65 Size Tested 75" x 95"	65/70	< 0.2
Two-Panel AP/PA, PG Upgrade (100)	Dual-Pane	Class LC-PG50 Size Tested 75" x 119"	50/65	< 0.2
Two-Panel AS/SA/SS (611, 80)	Dual-Pane	Class LC-PG45 Size Tested 71" x 95"	45/55	< 0.2
Two-Panel AS/SA/SS, PG Upgrade (611)	Dual-Pane	Class LC-PG65 Size Tested 75" x 82"	65/80	< 0.2
Two-Panel AS/SA/SS, PG Upgrade (80)	Dual-Pane	Class LC-PG65 Size Tested 75" x 95"	65/70	< 0.2
Three-Panel (611, 80)	Dual-Pane	Class LC-PG45 Size Tested 106" x 95"	45/55	< 0.2
Hinged Outswing Patio Doors				
Single Stationary (611, 80, 100)	Dual-Pane	Class LC-PG45 Size Tested 38" x 119"	45/55	< 0.2
Single Stationary, PG Upgrade (611, 80)	Dual-Pane	Class LC-PG65 Size Tested 38" x 95"	65/80	< 0.2
Single Stationary, PG Upgrade (100)	Dual-Pane	Class LC-PG65 Size Tested 38" x 119"	65/70	< 0.2
Single Active (611, 80, 100)	Dual-Pane	Class LC-PG45 Size Tested 38" x 119"	45/55	< 0.2
Single Active, PG Upgrade (611)	Dual-Pane	Class LC-PG65 Size Tested 38" x 82"	65/80	< 0.2
Single Active, PG Upgrade (80, 100)	Dual-Pane	Class LC-PG65 Size Tested 38" x 119"	65/70	< 0.2
Two-Panel (611, 80, 100)	Dual-Pane	Class LC-PG45 Size Tested 75" x 119"	45/45	< 0.2
Two Panel, PG Upgrade (611)	Dual-Pane	Class LC-PG65 Size Tested 75" x 82"	65/80	< 0.2
Two Panel, PG Upgrade (80)	Dual-Pane	Class LC-PG65 Size Tested 75" x 95"	65/70	< 0.2
Two Panel, PG Upgrade (100)	Dual-Pane	Class LC-PG55 Size Tested 75" x 119"	55/55	< 0.2

For sound transmission ratings, see page 214.

- "Performance Grade (PG)" ratings may vary from tested performance rating for larger or smaller units of a particular type.
- This data is accurate as of November 2022. Due to ongoing product changes, updated test results, or new industry standards, this data may change over time.
- Where designated, Andersen products are certified and labeled to the requirements of the Hallmark Certification Program. Actual performance may vary based on variations in manufacturing, shipping, installation, environmental conditions and conditions of use.
- Contact your Andersen supplier for more information.

continued on next page

Performance Grade and Air Infiltration – A-Series Windows and Patio Doors *(continued)*

For current performance information, please visit **andersenwindows.com**.

Andersen® Product	Glass Construction	AAMA/WDMA/CSA 101/I.S.2/A440 Performance Grade (PG)	+/- Corresponding Design Pressure (DP)	Air Infiltration CFM/FT²
Patio Door Transoms & Sidelights				
Transom	Dual-Pane	Class LC-PG70 Size Tested 112" x 27"	70/80	< 0.2
Sidelight Transom	Dual-Pane	Class LC-PG70 Size Tested 18" x 27"	70/70	< 0.2
Sidelight Transom, PG Upgrade	Dual-Pane	Class LC-PG70 Size Tested 18" x 27"	70/80	< 0.2
Sidelight (611, 80, 100)	Dual-Pane	Class LC-PG45 Size Tested 18" x 119"	45/70	< 0.2
Sidelight, PG Upgrade (611, 80, 100)	Dual-Pane	Class LC-PG70 Size Tested 18" x 119"	70/80	< 0.2
Complementary Springline™ & Arch Hinged Inswing Patio Doors				
Single Stationary	Dual-Pane	Class LC-PG45 Size Tested 75.3" x 95.5"	45/45	< 0.2
Single Active*	Dual-Pane	Class LC-PG45 Size Tested 37.9" x 95.5"	45/45	< 0.2
Two-Panel Stationary	Dual-Pane	Class LC-PG45 Size Tested 75.3" x 95.5"	45/45	< 0.2
Two-Panel Active*	Dual-Pane	Class LC-PG45 Size Tested 75.3" x 95.5"	45/45	< 0.2
Complementary Springline & Arch Hinged Outswing Patio Doors				
Single Stationary	Dual-Pane	Class LC-PG45 Size Tested 75.3" x 95.5"	45/45	< 0.2
Single Active*	Dual-Pane	Class LC-PG45 Size Tested 37.9" x 95.5"	45/45	< 0.2
Two-Panel Stationary	Dual-Pane	Class LC-PG45 Size Tested 75.3" x 95.5"	45/45	< 0.2
Two-Panel Active*	Dual-Pane	Class LC-PG45 Size Tested 75.3" x 95.5"	45/45	< 0.2

• "Performance Grade (PG)" ratings may vary from tested performance rating for larger or smaller units of a particular type.
• This data is accurate as of November 2022. Due to ongoing product changes, updated test results, or new industry standards, this data may change over time.
• Where designated, Andersen products are certified and labeled to the requirements of the Hallmark Certification Program. Actual performance may vary based on variations in manufacturing, shipping, installation, environmental conditions and conditions of use.
• Contact your Andersen supplier for more information.
*Tested with standard multi-point hardware.

For sound transmission ratings, see page 214.

Andersen® Products Total Unit Recycled Content Percentages

For current performance information, please visit **andersenwindows.com**.

Andersen® Product	% Pre-Consumer Recycled Content
A-Series Windows	
Casement	10%
Awning	10%
Double-Hung	10%
Picture	6%
Fixed Transom	5%
Venting Transom	10%
Specialty	5%
Complementary Casement	5%
A-Series Patio Doors	
Gliding	4%
Hinged Inswing	3%
Hinged Outswing	3%
Patio Door Sidelight	3%
Patio Door Transom	3%
Complementary Springline™ Hinged	3%
Complementary Arch Hinged	3%

• "% Pre-Consumer Recycled Content" is calculated to meet ISO 14021 standards based on NFRC sizing. Actual recycled content dependent on product size.

Sound Transmission Ratings – A-Series Windows and Patio Doors

For current performance information, please visit **andersenwindows.com**.

Andersen® Product	Glass Construction	Sound Transmission Class (STC)	Outdoor/Indoor Transmission Class (OITC)
Casement Windows			
Casement	Dual-Pane	27	23
	Triple-Pane	30	25
Awning	Dual-Pane	†	†
	Triple-Pane	29	23
Double-Hung	Dual-Pane	27	22
	Triple-Pane	28	23
Picture	Dual-Pane	27	22
	Triple-Pane	30	25
Venting Transom	Dual-Pane	28	22
	Triple-Pane	28	23
Fixed Transom	Dual-Pane	27	22
	Triple-Pane	31	24
Direct-Set Specialty Windows			
Rectangular	Dual-Pane	28	24
Arch	Dual-Pane	28	24
Springline™	Dual-Pane	28	24
Sash-Set Specialty Windows			
Rectangular	Dual-Pane	29	24
Arch	Dual-Pane	29	24
Springline	Dual-Pane	29	24
Gliding Patio Doors			
Single Stationary	Dual-Pane	†	†
	Triple-Pane	32	28
Single Stationary, PG Upgrade	Dual-Pane	†	†
Two-Panel	Dual-Pane	†	†
	Triple-Pane	29	25
Two-Panel, PG Upgrade	Dual-Pane	†	†
Three-Panel	Dual-Pane	†	†
Three-Panel, PG Upgrade	Dual-Pane	†	†
Four-Panel	Dual-Pane	†	†
Four-Panel, PG Upgrade	Dual-Pane	†	†
Hinged Inswing Patio Doors			
Single Stationary	Dual-Pane	30	26
Single Stationary, PG Upgrade	Dual-Pane	30	26
Single Active	Dual-Pane	30	26
	Triple-Pane	31	25
Single Active, PG Upgrade	Dual-Pane	30	26
Two-Panel AP/PA	Dual-Pane	30	25
	Triple-Pane	31	25
Two-Panel AP/PA, PG Upgrade	Dual-Pane	30	25
Two-Panel AS/SA/SS	Dual-Pane	30	25
Two-Panel AS/SA/SS, PG Upgrade	Dual-Pane	30	25
Three-Panel	Dual-Pane	†	†

Andersen® Product	Glass Construction	Sound Transmission Class (STC)	Outdoor/Indoor Transmission Class (OITC)
Hinged Outswing Patio Doors			
Single Stationary	Dual-Pane	30	25
Single Stationary, PG Upgrade	Dual-Pane	30	25
Single Active	Dual-Pane	30	25
	Triple-Pane	31	25
Single Active, PG Upgrade	Dual-Pane	30	25
Two-Panel	Dual-Pane	31	25
	Triple-Pane	31	25
Two-Panel, PG Upgrade	Dual-Pane	31	25
Patio Door Sidelights and Transoms			
Transom	Dual-Pane	†	†
Sidelight Transom	Dual-Pane	†	†
Sidelight Transom, PG Upgrade	Dual-Pane	†	†
Sidelight	Dual-Pane	†	†
Sidelight, PG Upgrade	Dual-Pane	†	†
Complementary Springline™ & Arch Hinged Inswing Patio Doors			
Single Stationary	Dual-Pane	†	†
Single Active	Dual-Pane	30	25
Two-Panel Stationary	Dual-Pane	†	†
Two-Panel Active	Dual-Pane	30	25
Complementary Springline & Arch Hinged Outswing Patio Doors			
Single Stationary	Dual-Pane	†	†
Single Active	Dual-Pane	31	25
Two-Panel Stationary	Dual-Pane	†	†
Two-Panel Active	Dual-Pane	31	25

• "Sound Transmission Class (STC)" and "Outdoor/Indoor Transmission Class (OITC)" ratings are for individual units based on independent tests and represent entire unit.
• This data is accurate as of November 2022. Due to ongoing product changes, updated test results, or new industry standards, this data may change over time.
• Contact your Andersen supplier for more information.
†Data not available.

Center of Glass Performance Data – A-Series Windows and Patio Doors

For current performance information, please visit **andersenwindows.com**.

DUAL-PANE

Low-E4® Dual-Pane Glass	VT[1]	SC[2]	SHGC[3]	RHG[4]	Fading Tuv[5]	Fading Tdw[6]	%RH @ center[7]	IGST[8]
A-Series Products								
Casement, Awning, Double-Hung, Picture, Transom & Specialty Windows	72%	0.48	0.41	98.2	16%	33%	61%	56°F
Gliding, Hinged Inswing & Outswing Patio Doors, Patio Door Sidelights & Transoms	71%	0.47	0.41	97.5	16%	33%	61%	56°F
Complementary Curved Top Patio Doors	65%	0.31	0.27	207	5%	21%	61%	56°F

DUAL-PANE

Low-E4® Sun Dual-Pane Glass	VT[1]	SC[2]	SHGC[3]	RHG[4]	Fading Tuv[5]	Fading Tdw[6]	%RH @ center[7]	IGST[8]
A-Series Products								
Casement, Awning, Double-Hung, Picture, Transom & Specialty Windows	40%	0.29	0.25	61.1	16%	24%	60%	55° F
Gliding, Hinged Inswing & Outswing Patio Doors, Patio Door Sidelights & Transoms	39%	0.29	0.25	60.6	15%	23%	61%	56° F
Complementary Curved Top Patio Doors	72%	0.48	0.41	310	16%	33%	61%	56°F

DUAL-PANE

Low-E4® SmartSun™ Dual-Pane Glass	VT[1]	SC[2]	SHGC[3]	RHG[4]	Fading Tuv[5]	Fading Tdw[6]	%RH @ center[7]	IGST[8]
A-Series Products								
Casement, Awning, Double-Hung, Picture, Transom & Specialty Windows	65%	0.31	0.27	65.6	5%	21%	62%	56° F
Gliding, Hinged Inswing & Outswing Patio Doors, Patio Door Sidelights & Transoms	64%	0.32	0.27	66.3	5%	21%	62%	56° F
Complementary Curved Top Patio Doors	40%	0.29	0.25	193	16%	24%	59%	55°F

TRIPLE-PANE

Low-E4® Triple-Pane Glass	VT[1]	SC[2]	SHGC[3]	RHG[4]	Fading Tuv[5]	Fading Tdw[6]	%RH @ center[7]	IGST[8]
A-Series Products								
Low-E4								
Casement, Awning, Double-Hung, Picture, Transom & Specialty Windows	66%	0.44	0.38	91.6	14%	30%	64%	57° F
Gliding, Hinged Inswing & Outswing Patio Doors, Patio Door Sidelights & Transoms	66%	0.44	0.38	91.6	14%	30%	64%	57° F
Low-E4 Enhanced								
Casement, Awning, Double-Hung, Picture, Transom & Specialty Windows	63%	0.43	0.37	88.6	8%	24%	71%	60° F
Gliding, Hinged Inswing & Outswing Patio Doors, Patio Door Sidelights & Transoms	63%	0.43	0.37	88.6	8%	24%	71%	60° F
Low-E4 Enhanced with HeatLock® Technology								
Casement, Awning, Double-Hung, Picture, Transom & Specialty Windows	62%	0.41	0.36	84.3	8%	23%	54%	52° F
Gliding, Hinged Inswing & Outswing Patio Doors, Patio Door Sidelights & Transoms	63%	0.43	0.37	88.6	8%	24%	71%	60° F

TRIPLE-PANE

Low-E4® SmartSun™ Triple-Pane Glass	VT[1]	SC[2]	SHGC[3]	RHG[4]	Fading Tuv[5]	Fading Tdw[6]	%RH @ center[7]	IGST[8]
A-Series Products								
SmartSun								
Casement, Awning, Double-Hung, Picture, Transom & Specialty Windows	59%	0.29	0.26	62.0	4%	19%	65%	57° F
Gliding, Hinged Inswing & Outswing Patio Doors, Patio Door Sidelights & Transoms	59%	0.29	0.26	62.0	4%	19%	65%	57° F
SmartSun Enhanced								
Casement, Awning, Double-Hung, Picture, Transom & Specialty Windows	57%	0.29	0.25	59.6	2%	16%	71%	60° F
Gliding, Hinged Inswing & Outswing Patio Doors, Patio Door Sidelights & Transoms	57%	0.29	0.25	59.6	2%	16%	71%	60° F
SmartSun Enhanced with HeatLock® Technology								
Casement, Awning, Double-Hung, Picture, Transom & Specialty Windows	56%	0.27	0.24	56.9	2%	16%	54%	53° F
Gliding, Hinged Inswing & Outswing Patio Doors, Patio Door Sidelights & Transoms	56%	0.27	0.24	56.9	2%	16%	54%	53° F

• "Low-E4®" and "Low-E4® SmartSun" are Andersen trademarks for "Low-E" glass.
• Based on NFRC testing/simulation conditions using Windows v7.4.6.0 and NFRC validated spectral data. 0°F outside temperature, 70°F inside temperature and a 15 mph wind.
1) Visible Transmittance (VT) measures how much light comes through the glass. The higher the value, from 0 to 1, the more daylight the glass lets in. Visible Transmittance is measured over the 380 to 760 nanometer portion of the solar spectrum. 2) Shading Coefficient (SC) defines the amount of heat gain through the glass compared to a single light of clear 1/8" (3) glass. 3) Solar Heat Gain Coefficient (SHGC) defines the fraction of solar radiation admitted through the glass directly transmitted, as well as absorbed and subsequently released inward. The lower the value, the less heat is transmitted through the product. 4) Relative Heat Gain (RHG) is the amount of heat gain through a glazing incorporating U-Factor and Solar Heat Gain Coefficient. 5) Transmission Ultra-Violet Energy (Tuv). The transmission of short-wave energy in the 300-380 nanometer portion of the solar spectrum. The energy can cause fabric fading. 6) Transmission Damage Function (Tdw). The transmission of UV and visible light energy in the 300-600 nanometer portion of the solar spectrum. The value includes both the UV and visible light energy that can cause fabric fading. This rating has also been referred to as the Krochmann Damage Function. This rating better predicts fading potential than UV transmission alone. The lower the Damage Function rating, the less transmission of short-wave energy through the glass that can potentially cause fabric fading. Fabric type is also a key component of fading potential. 7) Percent relative humidity before condensation occurs at the center of glass, taken using center of glass temperature. 8) Inside glass surface temperatures are taken at the center of glass.
• This data is accurate as of November 2022. Due to ongoing product changes, updated test results or new industry standards, this data may change over time. Contact your Andersen supplier for current performance information or upgrade options.
• Contact your Andersen supplier for center of glass performance data on windows with patterned glass, tempered glass and products ordered with capillary breather tubes.

Andersen® NFRC Certified Total Unit Performance – Dual-Pane Glass

For current performance information, please visit **andersenwindows.com**.

Andersen® Product	High-Performance Dual-Pane Glass Type		U-Factor[1]	SHGC[2]	VT[3]
A-Series Casement Windows AND-N-86	Low-E4®	Without Grilles	0.27	0.27	0.45
		Simulated Divided Light Grilles	0.27	0.24	0.41
		Finelight™ Grilles	0.27	0.24	0.41
		Full Divided Light Grilles	0.28	0.24	0.41
	Low-E4 w/HeatLock®	Without Grilles	0.24	0.26	0.44
		Simulated Divided Light Grilles	0.24	0.24	0.40
		Finelight Grilles	0.24	0.24	0.40
		Full Divided Light Grilles	0.26	0.24	0.40
	Low-E4 Sun	Without Grilles	0.28	0.16	0.25
		Simulated Divided Light Grilles	0.28	0.15	0.23
		Finelight Grilles	0.28	0.15	0.23
		Full Divided Light Grilles	0.29	0.15	0.23
	Low-E4 SmartSun™	Without Grilles	0.27	0.18	0.41
		Simulated Divided Light Grilles	0.27	0.16	0.37
		Finelight Grilles	0.27	0.16	0.37
		Energy Spacer Divided Light Grilles	0.27	0.16	0.37
		Full Divided Light Grilles	0.28	0.16	0.37
	Low-E4 SmartSun w/HeatLock	Without Grilles	0.23	0.17	0.40
		Simulated Divided Light Grilles	0.23	0.16	0.36
		Finelight Grilles	0.23	0.16	0.36
		Energy Spacer Divided Light Grilles	0.23	0.16	0.36
		Full Divided Light Grilles	0.25	0.16	0.36
A-Series Awning Windows AND-N-87	Low-E4®	Without Grilles	0.28	0.26	0.44
		Simulated Divided Light Grilles	0.28	0.23	0.39
		Finelight™ Grilles	0.28	0.23	0.39
		Full Divided Light Grilles	0.28	0.23	0.39
	Low-E4 w/HeatLock®	Without Grilles	0.25	0.25	0.43
		Simulated Divided Light Grilles	0.25	0.23	0.38
		Finelight Grilles	0.25	0.23	0.38
		Full Divided Light Grilles	0.26	0.23	0.38
	Low-E4 Sun	Without Grilles	0.28	0.16	0.24
		Simulated Divided Light Grilles	0.28	0.15	0.22
		Finelight Grilles	0.28	0.15	0.22
		Full Divided Light Grilles	0.29	0.15	0.22
	Low-E4 SmartSun™	Without Grilles	0.27	0.17	0.39
		Simulated Divided Light Grilles	0.27	0.16	0.35
		Finelight Grilles	0.27	0.16	0.35
		Energy Spacer Divided Light Grilles	0.27	0.16	0.35
		Full Divided Light Grilles	0.28	0.16	0.35
	Low-E4 SmartSun w/HeatLock	Without Grilles	0.24	0.17	0.39
		Simulated Divided Light Grilles	0.24	0.15	0.35
		Finelight Grilles	0.24	0.15	0.35
		Energy Spacer Divided Light Grilles	0.24	0.15	0.35
		Full Divided Light Grilles	0.25	0.15	0.35
A-Series Double-Hung Windows AND-N-91	Low-E4®	Without Grilles	0.29	0.30	0.52
		Simulated Divided Light Grilles	0.29	0.27	0.46
		Finelight™ Grilles	0.29	0.27	0.46
		Full Divided Light Grilles	0.30	0.27	0.46
	Low-E4 w/HeatLock®	Without Grilles	0.25	0.30	0.51
		Simulated Divided Light Grilles	0.25	0.27	0.45
		Finelight Grilles	0.25	0.27	0.45
		Full Divided Light Grilles	0.27	0.27	0.45
	Low-E4 Sun	Without Grilles	0.29	0.19	0.29
		Simulated Divided Light Grilles	0.29	0.17	0.26
		Finelight Grilles	0.29	0.17	0.26
		Full Divided Light Grilles	0.31	0.17	0.26
	Low-E4 SmartSun™	Without Grilles	0.27	0.20	0.47
		Simulated Divided Light Grilles	0.27	0.18	0.41
		Finelight Grilles	0.27	0.18	0.41
		Energy Spacer Divided Light Grilles	0.27	0.18	0.41
		Full Divided Light Grilles	0.30	0.18	0.41
	Low-E4 SmartSun w/HeatLock	Without Grilles	0.25	0.20	0.46
		Simulated Divided Light Grilles	0.25	0.18	0.40
		Finelight Grilles	0.25	0.18	0.40
		Energy Spacer Divided Light Grilles	0.25	0.18	0.40
		Full Divided Light Grilles	0.27	0.18	0.40

Andersen® Product	High-Performance Dual-Pane Glass Type		U-Factor[1]	SHGC[2]	VT[3]
A-Series Picture Windows AND-N-88	Low-E4®	Without Grilles	0.27	0.31	0.54
		Simulated Divided Light Grilles	0.27	0.28	0.48
		Finelight™ Grilles	0.27	0.28	0.48
		Full Divided Light Grilles	0.28	0.28	0.48
	Low-E4 w/HeatLock®	Without Grilles	0.23	0.31	0.53
		Simulated Divided Light Grilles	0.23	0.28	0.47
		Finelight Grilles	0.23	0.28	0.47
		Full Divided Light Grilles	0.25	0.28	0.47
	Low-E4 Sun	Without Grilles	0.27	0.19	0.30
		Simulated Divided Light Grilles	0.27	0.17	0.27
		Finelight Grilles	0.27	0.17	0.27
		Full Divided Light Grilles	0.29	0.17	0.27
	Low-E4 SmartSun™	Without Grilles	0.26	0.21	0.49
		Simulated Divided Light Grilles	0.26	0.19	0.43
		Finelight Grilles	0.26	0.19	0.43
		Energy Spacer Divided Light Grilles	0.26	0.19	0.43
		Full Divided Light Grilles	0.28	0.19	0.43
	Low-E4 SmartSun w/HeatLock	Without Grilles	0.22	0.20	0.48
		Simulated Divided Light Grilles	0.22	0.18	0.42
		Finelight Grilles	0.22	0.18	0.42
		Energy Spacer Divided Light Grilles	0.22	0.18	0.42
		Full Divided Light Grilles	0.25	0.18	0.42
A-Series Venting Transom Windows AND-N-90	Low-E4®	Without Grilles	0.28	0.27	0.46
		Simulated Divided Light Grilles	0.28	0.25	0.41
		Finelight™ Grilles	0.28	0.25	0.41
		Full Divided Light Grilles	0.28	0.25	0.41
	Low-E4 w/HeatLock®	Without Grilles	0.25	0.26	0.45
		Simulated Divided Light Grilles	0.25	0.24	0.40
		Finelight Grilles	0.25	0.24	0.40
		Full Divided Light Grilles	0.26	0.24	0.40
	Low-E4 Sun	Without Grilles	0.28	0.17	0.26
		Simulated Divided Light Grilles	0.28	0.15	0.23
		Finelight Grilles	0.28	0.15	0.23
		Full Divided Light Grilles	0.29	0.15	0.23
	Low-E4 SmartSun™	Without Grilles	0.27	0.18	0.41
		Simulated Divided Light Grilles	0.27	0.16	0.37
		Finelight Grilles	0.27	0.16	0.37
		Energy Spacer Divided Light Grilles	0.27	0.16	0.37
		Full Divided Light Grilles	0.28	0.16	0.37
	Low-E4 SmartSun w/HeatLock	Without Grilles	0.24	0.18	0.40
		Simulated Divided Light Grilles	0.24	0.16	0.36
		Finelight Grilles	0.24	0.16	0.36
		Energy Spacer Divided Light Grilles	0.24	0.16	0.36
		Full Divided Light Grilles	0.25	0.16	0.36

continued on next page

• "Low-E4®," "Low-E4® SmartSun™" "Low-E4® Sun" and "HeatLock®" are Andersen trademarks for "Low-E" glass. 1) U-Factor defines the amount of heat loss through the total unit in BTU/hr-ft²-°F. The lower the value, the less heat is lost through the entire product. Window values represent non-tempered glass. Use of tempered glass can increase U-Factor ratings. See andersenwindows.com/nfrc for specific performance values. Door values represent tempered glass. 2) Solar Heat Gain Coefficient (SHGC) defines the fraction of solar radiation admitted through the glass directly transmitted, as well as absorbed and subsequently released inward. The lower the value, the less heat is transmitted through the product. 3) Visible Transmittance (VT) measures how much light comes through a product (glass and frame). The higher the value, from 0 to 1, the more daylight the product lets in over the product's total unit area. Visible Light Transmittance is measured over the 380 to 760 nanometer portion of the solar spectrum.

• NFRC ratings are based on modeling by a third-party agency as validated by an independent test lab in compliance with NFRC program and procedural requirements.

• This data is accurate as of November 2022. Due to ongoing product changes, updated test results, or new industry standards or requirements, this data may change over time. Ratings are for sizes specified by NFRC for testing and certification. Ratings may vary depending on use of tempered glass, different grille options, glass with capillary breather tubes for high altitudes, etc.

• Values are for single units with given pane thickness and 3/4" (19 mm) grilles for windows and 1" (25 mm) grilles for door products.

Andersen® NFRC Certified Total Unit Performance – Dual-Pane Glass *(continued)*

For current performance information, please visit **andersenwindows.com**.

Andersen® Product	High-Performance Dual-Pane Glass Type		U-Factor[1]	SHGC[2]	VT[3]
A-Series Fixed Transom Windows AND-N-89	Low-E4®	Without Grilles	0.27	0.32	0.55
		Simulated Divided Light Grilles	0.27	0.29	0.49
		Finelight™ Grilles	0.27	0.29	0.49
		Full Divided Light Grilles	0.28	0.29	0.49
	Low-E4 w/HeatLock®	Without Grilles	0.23	0.31	0.54
		Simulated Divided Light Grilles	0.23	0.28	0.48
		Finelight Grilles	0.23	0.28	0.48
		Full Divided Light Grilles	0.25	0.28	0.48
	Low-E4 Sun	Without Grilles	0.27	0.20	0.31
		Simulated Divided Light Grilles	0.27	0.18	0.27
		Finelight Grilles	0.27	0.18	0.27
		Full Divided Light Grilles	0.29	0.18	0.27
	Low-E4 SmartSun™	Without Grilles	0.26	0.21	0.49
		Simulated Divided Light Grilles	0.26	0.19	0.44
		Finelight Grilles	0.26	0.19	0.44
		Energy Spacer Divided Light Grilles	0.26	0.19	0.44
		Full Divided Light Grilles	0.28	0.19	0.44
	Low-E4 SmartSun w/HeatLock	Without Grilles	0.22	0.21	0.48
		Simulated Divided Light Grilles	0.22	0.19	0.43
		Finelight Grilles	0.22	0.19	0.43
		Energy Spacer Divided Light Grilles	0.22	0.19	0.43
		Full Divided Light Grilles	0.25	0.19	0.43
A-Series Specialty Windows Direct-Set AND-N-126	Low-E4®	Without Grilles	0.29	0.35	0.61
		Simulated Divided Light Grilles	0.29	0.32	0.54
		Finelight™ Grilles	0.30	0.32	0.54
		Full Divided Light Grilles	0.30	0.32	0.54
	Low-E4 w/HeatLock®	Without Grilles	0.25	0.35	0.59
		Simulated Divided Light Grilles	0.25	0.31	0.53
		Finelight Grilles	0.26	0.31	0.53
		Full Divided Light Grilles	0.27	0.31	0.53
	Low-E4 Sun	Without Grilles	0.30	0.22	0.34
		Simulated Divided Light Grilles	0.30	0.20	0.30
		Finelight Grilles	0.31	0.20	0.30
		Full Divided Light Grilles	0.31	0.20	0.30
	Low-E4 SmartSun™	Without Grilles	0.28	0.23	0.55
		Simulated Divided Light Grilles	0.28	0.21	0.49
		Finelight Grilles	0.30	0.21	0.49
		Full Divided Light Grilles	0.30	0.21	0.49
	Low-E4 SmartSun w/HeatLock	Without Grilles	0.24	0.23	0.53
		Simulated Divided Light Grilles	0.24	0.21	0.48
		Finelight Grilles	0.25	0.21	0.48
		Full Divided Light Grilles	0.26	0.21	0.48
A-Series Specialty Windows Sash-Set AND-N-128	Low-E4®	Without Grilles	0.30	0.32	0.55
		Simulated Divided Light Grilles	0.30	0.29	0.49
		Finelight™ Grilles	0.31	0.29	0.49
		Full Divided Light Grilles	0.31	0.29	0.49
	Low-E4 w/HeatLock®	Without Grilles	0.26	0.31	0.53
		Simulated Divided Light Grilles	0.26	0.28	0.48
		Finelight Grilles	0.27	0.28	0.48
		Full Divided Light Grilles	0.28	0.28	0.48
	Low-E4 Sun	Without Grilles	0.30	0.20	0.30
		Simulated Divided Light Grilles	0.30	0.18	0.27
		Finelight Grilles	0.31	0.18	0.27
		Full Divided Light Grilles	0.31	0.18	0.27
	Low-E4 SmartSun™	Without Grilles	0.29	0.21	0.49
		Simulated Divided Light Grilles	0.29	0.19	0.44
		Finelight Grilles	0.30	0.19	0.44
		Full Divided Light Grilles	0.30	0.19	0.44
	Low-E4 SmartSun w/HeatLock	Without Grilles	0.25	0.21	0.48
		Simulated Divided Light Grilles	0.25	0.19	0.43
		Finelight Grilles	0.26	0.19	0.43
		Full Divided Light Grilles	0.27	0.19	0.43

Andersen® Product	High-Performance Dual-Pane Glass Type		U-Factor[1]	SHGC[2]	VT[3]
A-Series Complementary Casement Windows AND-N-107	Low-E4®	Without Grilles	0.30	0.28	0.47
		Simulated Divided Light Grilles	0.30	0.25	0.42
		Finelight™ Grilles	0.30	0.25	0.42
		Full Divided Light Grilles	0.31	0.25	0.42
	Low-E4 w/HeatLock®	Without Grilles	0.27	0.27	0.46
		Simulated Divided Light Grilles	0.27	0.25	0.41
		Finelight Grilles	0.27	0.25	0.41
		Full Divided Light Grilles	0.28	0.25	0.41
	Low-E4 Sun	Without Grilles	0.30	0.17	0.26
		Simulated Divided Light Grilles	0.30	0.16	0.23
		Finelight Grilles	0.30	0.16	0.23
		Full Divided Light Grilles	0.31	0.16	0.23
	Low-E4 SmartSun™	Without Grilles	0.30	0.18	0.42
		Simulated Divided Light Grilles	0.30	0.17	0.38
		Finelight Grilles	0.30	0.17	0.38
		Full Divided Light Grilles	0.30	0.17	0.38
	Low-E4 SmartSun w/HeatLock	Without Grilles	0.26	0.18	0.41
		Simulated Divided Light Grilles	0.26	0.17	0.37
		Finelight Grilles	0.26	0.17	0.37
		Full Divided Light Grilles	0.28	0.17	0.37
A-Series Gliding Patio Doors Traditional Panels AND-N-99	Low-E4®	Without Grilles	0.30	0.27	0.45
		Blinds-Between-the-Glass*	0.35	0.24	0.40
		Simulated Divided Light Grilles	0.30	0.23	0.39
		Finelight™ Grilles	0.30	0.23	0.39
		Full Divided Light Grilles	0.31	0.23	0.39
	Low-E4 w/HeatLock®	Without Grilles	0.27	0.26	0.44
		Simulated Divided Light Grilles	0.27	0.23	0.38
		Finelight Grilles	0.27	0.23	0.38
		Full Divided Light Grilles	0.29	0.23	0.38
	Low-E4 Sun	Without Grilles	0.30	0.16	0.25
		Simulated Divided Light Grilles	0.30	0.15	0.22
		Finelight Grilles	0.30	0.15	0.22
		Full Divided Light Grilles	0.32	0.15	0.22
	Low-E4 SmartSun™	Without Grilles	0.29	0.18	0.40
		Simulated Divided Light Grilles	0.29	0.16	0.35
		Finelight Grilles	0.29	0.16	0.35
		Energy Spacer Divided Light Grilles	0.29	0.16	0.35
		Full Divided Light Grilles	0.31	0.16	0.35
	Low-E4 SmartSun w/HeatLock	Without Grilles	0.26	0.17	0.40
		Simulated Divided Light Grilles	0.26	0.15	0.34
		Finelight Grilles	0.26	0.15	0.34
		Energy Spacer Divided Light Grilles	0.26	0.15	0.34
		Full Divided Light Grilles	0.29	0.15	0.34

continued on next page

• "Low-E4®," "Low-E4® SmartSun™," "Low-E4® Sun" and "HeatLock®" are Andersen trademarks for "Low-E" glass. 1) U-Factor defines the amount of heat loss through the total unit in BTU/hr-ft²-°F. The lower the value, the less heat is lost through the entire product. Window values represent non-tempered glass. Use of tempered glass can increase U-Factor ratings. See andersenwindows.com/nfrc for specific performance values. Door values represent tempered glass. 2) Solar Heat Gain Coefficient (SHGC) defines the fraction of solar radiation admitted through the glass directly transmitted, as well as absorbed and subsequently released inward. The lower the value, the less heat is transmitted through the product. 3) Visible Transmittance (VT) measures how much light comes through a product (glass and frame). The higher the value, from 0 to 1, the more daylight the product lets in over the product's total unit area. Visible Light Transmittance is measured over the 380 to 760 nanometer portion of the solar spectrum.

• NFRC ratings are based on modeling by a third-party agency as validated by an independent test lab in compliance with NFRC program and procedural requirements.

• This data is accurate as of November 2022. Due to ongoing product changes, updated test results, or new industry standards or requirements, this data may change over time. Ratings are for sizes specified by NFRC for testing and certification. Ratings may vary depending on use of tempered glass, different grille options, glass with capillary breather tubes for high altitudes, etc.

• Values are for single units with given pane thickness and ¾" (19 mm) grilles for windows and 1" (25 mm) grilles for door products.

*Available for select patio door sizes. Data based on blinds in full open position.

Andersen® NFRC Certified Total Unit Performance – Dual-Pane Glass *(continued)*

For current performance information, please visit **andersenwindows.com**.

Andersen® Product	High-Performance Dual-Pane Glass Type		U-Factor[1]	SHGC[2]	VT[3]
A-Series Gliding Patio Doors Contemporary Panels AND-N-212	Low-E4®	Without Grilles	0.29	0.28	0.48
		Blinds-Between-the-Glass*	0.35	0.26	0.43
		Simulated Divided Light Grilles	0.29	0.25	0.41
		Finelight™ Grilles	0.31	0.25	0.41
		Full Divided Light Grilles	0.31	0.25	0.41
	Low-E4 w/HeatLock®	Without Grilles	0.26	0.28	0.47
		Simulated Divided Light Grilles	0.26	0.24	0.40
		Finelight Grilles	0.27	0.24	0.40
		Full Divided Light Grilles	0.29	0.24	0.40
	Low-E4 Sun	Without Grilles	0.30	0.17	0.27
		Simulated Divided Light Grilles	0.30	0.15	0.23
		Finelight Grilles	0.31	0.15	0.23
		Full Divided Light Grilles	0.31	0.15	0.23
	Low-E4 SmartSun™	Without Grilles	0.29	0.19	0.43
		Simulated Divided Light Grilles	0.29	0.17	0.37
		Finelight Grilles	0.30	0.17	0.37
		Energy Spacer Divided Light Grilles	0.29	0.17	0.37
		Full Divided Light Grilles	0.31	0.17	0.37
	Low-E4 SmartSun w/HeatLock	Without Grilles	0.25	0.18	0.42
		Simulated Divided Light Grilles	0.25	0.16	0.36
		Finelight Grilles	0.27	0.16	0.36
		Energy Spacer Divided Light Grilles	0.25	0.16	0.36
		Full Divided Light Grilles	0.28	0.16	0.36
A-Series Hinged Inswing Patio Doors Traditional Panels AND-N-92	Low-E4®	Without Grilles	0.30	0.24	0.41
		Blinds-Between-the-Glass*	0.35	0.23	0.38
		Simulated Divided Light Grilles	0.30	0.21	0.35
		Finelight™ Grilles	0.30	0.21	0.35
		Full Divided Light Grilles	0.32	0.21	0.35
	Low-E4 w/HeatLock®	Without Grilles	0.27	0.24	0.40
		Simulated Divided Light Grilles	0.27	0.20	0.34
		Finelight Grilles	0.28	0.20	0.34
		Full Divided Light Grilles	0.30	0.20	0.34
	Low-E4 Sun	Without Grilles	0.31	0.15	0.23
		Simulated Divided Light Grilles	0.31	0.13	0.19
		Finelight Grilles	0.32	0.13	0.19
		Full Divided Light Grilles	0.32	0.13	0.19
	Low-E4 SmartSun™	Without Grilles	0.30	0.16	0.37
		Simulated Divided Light Grilles	0.30	0.14	0.31
		Finelight Grilles	0.31	0.14	0.31
		Energy Spacer Divided Light Grilles	0.30	0.14	0.31
		Full Divided Light Grilles	0.31	0.14	0.31
	Low-E4 SmartSun w/HeatLock	Without Grilles	0.27	0.16	0.36
		Simulated Divided Light Grilles	0.27	0.14	0.31
		Finelight Grilles	0.28	0.14	0.31
		Energy Spacer Divided Light Grilles	0.27	0.14	0.31
		Full Divided Light Grilles	0.29	0.14	0.31
A-Series Hinged Inswing Patio Doors Contemporary Panels AND-N-211	Low-E4®	Without Grilles	0.30	0.25	0.43
		Blinds-Between-the-Glass*	0.35	0.24	0.40
		Simulated Divided Light Grilles	0.30	0.22	0.37
		Finelight™ Grilles	0.31	0.22	0.37
		Full Divided Light Grilles	0.31	0.22	0.37
	Low-E4 w/HeatLock®	Without Grilles	0.27	0.25	0.42
		Simulated Divided Light Grilles	0.27	0.22	0.36
		Finelight Grilles	0.28	0.22	0.36
		Full Divided Light Grilles	0.29	0.22	0.36
	Low-E4 Sun	Without Grilles	0.30	0.16	0.24
		Simulated Divided Light Grilles	0.30	0.14	0.21
		Finelight Grilles	0.32	0.14	0.21
		Full Divided Light Grilles	0.32	0.14	0.21
	Low-E4 SmartSun™	Without Grilles	0.29	0.17	0.39
		Simulated Divided Light Grilles	0.29	0.15	0.33
		Finelight Grilles	0.31	0.15	0.33
		Energy Spacer Divided Light Grilles	0.29	0.15	0.33
		Full Divided Light Grilles	0.31	0.15	0.33
	Low-E4 SmartSun w/HeatLock	Without Grilles	0.26	0.17	0.38
		Simulated Divided Light Grilles	0.26	0.15	0.33
		Finelight Grilles	0.28	0.15	0.33
		Energy Spacer Divided Light Grilles	0.26	0.15	0.33
		Full Divided Light Grilles	0.29	0.15	0.33

Andersen® Product	High-Performance Dual-Pane Glass Type		U-Factor[1]	SHGC[2]	VT[3]
A-Series Hinged Outswing Patio Doors Traditional Panels AND-N-93	Low-E4®	Without Grilles	0.30	0.24	0.41
		Blinds-Between-the-Glass*	0.34	0.23	0.38
		Simulated Divided Light Grilles	0.30	0.21	0.35
		Finelight™ Grilles	0.31	0.21	0.35
		Full Divided Light Grilles	0.31	0.21	0.35
	Low-E4 w/HeatLock®	Without Grilles	0.27	0.24	0.40
		Simulated Divided Light Grilles	0.27	0.21	0.34
		Finelight Grilles	0.28	0.21	0.34
		Full Divided Light Grilles	0.29	0.21	0.34
	Low-E4 Sun	Without Grilles	0.30	0.15	0.23
		Simulated Divided Light Grilles	0.30	0.13	0.19
		Finelight Grilles	0.31	0.13	0.19
		Full Divided Light Grilles	0.32	0.13	0.19
	Low-E4 SmartSun™	Without Grilles	0.29	0.16	0.37
		Simulated Divided Light Grilles	0.29	0.14	0.31
		Finelight Grilles	0.31	0.14	0.31
		Energy Spacer Divided Light Grilles	0.29	0.14	0.31
		Full Divided Light Grilles	0.31	0.14	0.31
	Low-E4 SmartSun w/HeatLock	Without Grilles	0.26	0.16	0.36
		Simulated Divided Light Grilles	0.26	0.14	0.31
		Finelight Grilles	0.28	0.14	0.31
		Energy Spacer Divided Light Grilles	0.26	0.14	0.31
		Full Divided Light Grilles	0.29	0.14	0.31
A-Series Hinged Outswing Patio Doors Contemporary Panels AND-N-210	Low-E4®	Without Grilles	0.29	0.26	0.43
		Blinds-Between-the-Glass*	0.34	0.24	0.40
		Simulated Divided Light Grilles	0.29	0.23	0.37
		Finelight™ Grilles	0.31	0.23	0.37
		Full Divided Light Grilles	0.31	0.23	0.37
	Low-E4 w/HeatLock®	Without Grilles	0.26	0.25	0.42
		Simulated Divided Light Grilles	0.26	0.22	0.36
		Finelight Grilles	0.27	0.22	0.36
		Full Divided Light Grilles	0.29	0.22	0.36
	Low-E4 Sun	Without Grilles	0.30	0.16	0.24
		Simulated Divided Light Grilles	0.30	0.14	0.21
		Finelight Grilles	0.31	0.14	0.21
		Full Divided Light Grilles	0.31	0.14	0.21
	Low-E4 SmartSun™	Without Grilles	0.29	0.17	0.39
		Simulated Divided Light Grilles	0.29	0.15	0.33
		Finelight Grilles	0.30	0.15	0.33
		Energy Spacer Divided Light Grilles	0.29	0.15	0.33
		Full Divided Light Grilles	0.30	0.15	0.33
	Low-E4 SmartSun w/HeatLock	Without Grilles	0.26	0.17	0.38
		Simulated Divided Light Grilles	0.26	0.15	0.33
		Finelight Grilles	0.27	0.15	0.33
		Energy Spacer Divided Light Grilles	0.26	0.15	0.33
		Full Divided Light Grilles	0.28	0.15	0.33

continued on next page

• "Low-E4®," "Low-E4® SmartSun™," "Low-E4® Sun" and "HeatLock®" are Andersen trademarks for "Low-E" glass. 1) U-Factor defines the amount of heat loss through the total unit in BTU/hr-ft^2-°F. The lower the value, the less heat is lost through the entire product. Window values represent non-tempered glass. Use of tempered glass can increase U-Factor ratings. See andersenwindows.com/nfrc for specific performance values. Door values represent tempered glass. 2) Solar Heat Gain Coefficient (SHGC) defines the fraction of solar radiation admitted through the glass directly transmitted, as well as absorbed and subsequently released inward. The lower the value, the less heat is transmitted through the product. 3) Visible Transmittance (VT) measures how much light comes through a product (glass and frame). The higher the value, from 0 to 1, the more daylight the product lets in over the product's total unit area. Visible Light Transmittance is measured over the 380 to 760 nanometer portion of the solar spectrum.

• NFRC ratings are based on modeling by a third-party agency as validated by an independent test lab in compliance with NFRC program and procedural requirements.

• This data is accurate as of November 2022. Due to ongoing product changes, updated test results, or new industry standards or requirements, this data may change over time. Ratings are for sizes specified by NFRC for testing and certification. Ratings may vary depending on use of tempered glass, different grille options, glass with capillary breather tubes for high altitudes, etc.

• Values are for single units with given pane thickness and 3/4" (19 mm) grilles for windows and 1" (25 mm) grilles for door products.

*Available for select patio door sizes. Data based on blinds in full open position.

Andersen® NFRC Certified Total Unit Performance – Dual-Pane Glass *(continued)*

For current performance information, please visit **andersenwindows.com**.

Andersen® Product	High-Performance Dual-Pane Glass Type		U-Factor[1]	SHGC[2]	VT[3]
A-Series Patio Door Sidelight Transoms Direct-Set AND-N-96	Low-E4®	Without Grilles	0.28	0.34	0.58
		Simulated Divided Light Grilles	0.28	0.31	0.53
		Finelight™ Grilles	0.29	0.31	0.53
		Full Divided Light Grilles	0.29	0.31	0.53
	Low-E4 w/HeatLock®	Without Grilles	0.24	0.33	0.57
		Simulated Divided Light Grilles	0.24	0.30	0.51
		Finelight Grilles	0.24	0.30	0.51
		Full Divided Light Grilles	0.26	0.30	0.51
	Low-E4 Sun	Without Grilles	0.28	0.21	0.32
		Simulated Divided Light Grilles	0.28	0.19	0.29
		Finelight Grilles	0.29	0.19	0.29
		Full Divided Light Grilles	0.29	0.19	0.29
	Low-E4 SmartSun™	Without Grilles	0.27	0.22	0.52
		Simulated Divided Light Grilles	0.27	0.20	0.47
		Finelight Grilles	0.28	0.20	0.47
		Energy Spacer Divided Light Grilles	0.27	0.20	0.47
		Full Divided Light Grilles	0.28	0.20	0.47
	Low-E4 SmartSun w/HeatLock	Without Grilles	0.23	0.22	0.51
		Simulated Divided Light Grilles	0.23	0.20	0.46
		Finelight Grilles	0.24	0.20	0.46
		Energy Spacer Divided Light Grilles	0.23	0.20	0.46
		Full Divided Light Grilles	0.25	0.20	0.46
A-Series Patio Door Sidelight Transoms Sash-Set AND-N-95	Low-E4®	Without Grilles	0.29	0.26	0.43
		Simulated Divided Light Grilles	0.29	0.23	0.39
		Finelight™ Grilles	0.30	0.23	0.39
		Full Divided Light Grilles	0.30	0.23	0.39
	Low-E4 w/HeatLock®	Without Grilles	0.26	0.25	0.42
		Simulated Divided Light Grilles	0.26	0.23	0.38
		Finelight Grilles	0.27	0.23	0.38
		Full Divided Light Grilles	0.28	0.23	0.38
	Low-E4 Sun	Without Grilles	0.30	0.16	0.24
		Simulated Divided Light Grilles	0.30	0.15	0.21
		Finelight Grilles	0.30	0.15	0.21
		Full Divided Light Grilles	0.30	0.15	0.21
	Low-E4 SmartSun™	Without Grilles	0.29	0.17	0.39
		Simulated Divided Light Grilles	0.29	0.16	0.35
		Finelight Grilles	0.29	0.16	0.35
		Energy Spacer Divided Light Grilles	0.29	0.16	0.35
		Full Divided Light Grilles	0.30	0.16	0.35
	Low-E4 SmartSun w/HeatLock	Without Grilles	0.26	0.17	0.38
		Simulated Divided Light Grilles	0.26	0.15	0.34
		Finelight Grilles	0.26	0.15	0.34
		Energy Spacer Divided Light Grilles	0.26	0.15	0.34
		Full Divided Light Grilles	0.27	0.15	0.34
A-Series Patio Door Transoms Direct-Set AND-N-96	Low-E4®	Without Grilles	0.28	0.34	0.58
		Simulated Divided Light Grilles	0.28	0.31	0.53
		Finelight™ Grilles	0.29	0.31	0.53
		Full Divided Light Grilles	0.29	0.31	0.53
	Low-E4 w/HeatLock®	Without Grilles	0.24	0.33	0.57
		Simulated Divided Light Grilles	0.24	0.30	0.51
		Finelight Grilles	0.24	0.30	0.51
		Full Divided Light Grilles	0.26	0.30	0.51
	Low-E4 Sun	Without Grilles	0.28	0.21	0.32
		Simulated Divided Light Grilles	0.28	0.19	0.29
		Finelight Grilles	0.29	0.19	0.29
		Full Divided Light Grilles	0.29	0.19	0.29
	Low-E4 SmartSun™	Without Grilles	0.27	0.22	0.52
		Simulated Divided Light Grilles	0.27	0.20	0.47
		Finelight Grilles	0.28	0.20	0.47
		Energy Spacer Divided Light Grilles	0.27	0.20	0.47
		Full Divided Light Grilles	0.28	0.20	0.47
	Low-E4 SmartSun w/HeatLock	Without Grilles	0.23	0.22	0.51
		Simulated Divided Light Grilles	0.23	0.20	0.46
		Finelight Grilles	0.24	0.20	0.46
		Energy Spacer Divided Light Grilles	0.23	0.20	0.46
		Full Divided Light Grilles	0.25	0.20	0.46

Andersen® Product	High-Performance Dual-Pane Glass Type		U-Factor[1]	SHGC[2]	VT[3]
A-Series Patio Door Transoms Sash-Set AND-N-95	Low-E4®	Without Grilles	0.30	0.25	0.41
		Simulated Divided Light Grilles	0.30	0.22	0.37
		Finelight™ Grilles	0.30	0.22	0.37
		Full Divided Light Grilles	0.30	0.22	0.37
	Low-E4 w/HeatLock®	Without Grilles	0.27	0.24	0.40
		Simulated Divided Light Grilles	0.27	0.22	0.36
		Finelight Grilles	0.27	0.22	0.36
		Full Divided Light Grilles	0.28	0.22	0.36
	Low-E4 Sun	Without Grilles	0.30	0.15	0.23
		Simulated Divided Light Grilles	0.30	0.14	0.20
		Finelight Grilles	0.31	0.14	0.20
		Full Divided Light Grilles	0.31	0.14	0.20
	Low-E4 SmartSun™	Without Grilles	0.29	0.16	0.37
		Simulated Divided Light Grilles	0.29	0.15	0.33
		Finelight Grilles	0.30	0.15	0.33
		Energy Spacer Divided Light Grilles	0.29	0.15	0.33
		Full Divided Light Grilles	0.30	0.15	0.33
	Low-E4 SmartSun w/HeatLock	Without Grilles	0.26	0.16	0.36
		Simulated Divided Light Grilles	0.26	0.15	0.32
		Finelight Grilles	0.27	0.15	0.32
		Energy Spacer Divided Light Grilles	0.26	0.15	0.32
		Full Divided Light Grilles	0.28	0.15	0.32
A-Series Patio Door Sidelights Traditional Panels AND-N-94	Low-E4®	Without Grilles	0.30	0.23	0.39
		Simulated Divided Light Grilles	0.30	0.21	0.34
		Finelight™ Grilles	0.31	0.21	0.34
		Full Divided Light Grilles	0.31	0.21	0.34
	Low-E4 w/HeatLock®	Without Grilles	0.27	0.23	0.38
		Simulated Divided Light Grilles	0.27	0.21	0.34
		Finelight Grilles	0.28	0.21	0.34
		Full Divided Light Grilles	0.29	0.21	0.34
	Low-E4 Sun	Without Grilles	0.30	0.15	0.22
		Simulated Divided Light Grilles	0.30	0.13	0.19
		Finelight Grilles	0.31	0.13	0.19
		Full Divided Light Grilles	0.31	0.13	0.19
	Low-E4 SmartSun™	Without Grilles	0.29	0.16	0.35
		Simulated Divided Light Grilles	0.29	0.14	0.31
		Finelight Grilles	0.30	0.14	0.31
		Energy Spacer Divided Light Grilles	0.29	0.14	0.31
		Full Divided Light Grilles	0.30	0.14	0.31
	Low-E4 SmartSun w/HeatLock	Without Grilles	0.27	0.15	0.34
		Simulated Divided Light Grilles	0.27	0.14	0.30
		Finelight Grilles	0.27	0.14	0.30
		Energy Spacer Divided Light Grilles	0.27	0.14	0.30
		Full Divided Light Grilles	0.28	0.14	0.30

continued on next page

• "Low-E4®," "Low-E4® SmartSun™," "Low-E4® Sun" and "HeatLock®" are Andersen trademarks for "Low-E" glass. 1) U-Factor defines the amount of heat loss through the total unit in BTU/hr-ft²-°F. The lower the value, the less heat is lost through the entire product. Window values represent non-tempered glass. Use of tempered glass can increase U-Factor ratings. See andersenwindows.com/nfrc for specific performance values. Door values represent tempered glass. 2) Solar Heat Gain Coefficient (SHGC) defines the fraction of solar radiation admitted through the glass directly transmitted, as well as absorbed and subsequently released inward. The lower the value, the less heat is transmitted through the product. 3) Visible Transmittance (VT) measures how much light comes through a product (glass and frame). The higher the value, from 0 to 1, the more daylight the product lets in over the product's total unit area. Visible Light Transmittance is measured over the 380 to 760 nanometer portion of the solar spectrum.

• NFRC ratings are based on modeling by a third-party agency as validated by an independent test lab in compliance with NFRC program and procedural requirements.

• This data is accurate as of November 2022. Due to ongoing product changes, updated test results, or new industry standards or requirements, this data may change over time. Ratings are for sizes specified by NFRC for testing and certification. Ratings may vary depending on use of tempered glass, different grille options, glass with capillary breather tubes for high altitudes, etc.

• Values are for single units with given pane thickness and ¾" (19 mm) grilles for windows and 1" (25 mm) grilles for door products.

Andersen® NFRC Certified Total Unit Performance – Dual-Pane Glass *(continued)*

For current performance information, please visit **andersenwindows.com**.

Andersen® Product	High-Performance Dual-Pane Glass Type		U-Factor[1]	SHGC[2]	VT[3]
A-Series Patio Door Sidelights Contemporary Panels AND-N-213	Low-E4®	Without Grilles	0.30	0.22	0.36
		Simulated Divided Light Grilles	0.30	0.20	0.32
		Finelight™ Grilles	0.31	0.20	0.32
		Full Divided Light Grilles	0.31	0.20	0.32
	Low-E4 w/HeatLock®	Without Grilles	0.28	0.21	0.35
		Simulated Divided Light Grilles	0.28	0.19	0.31
		Finelight Grilles	0.28	0.19	0.31
		Full Divided Light Grilles	0.29	0.19	0.31
	Low-E4 Sun	Without Grilles	0.30	0.14	0.20
		Simulated Divided Light Grilles	0.30	0.12	0.18
		Finelight™ Grilles	0.31	0.12	0.18
		Full Divided Light Grilles	0.31	0.12	0.18
	Low-E4 SmartSun™	Without Grilles	0.30	0.15	0.32
		Simulated Divided Light Grilles	0.30	0.13	0.29
		Finelight Grilles	0.31	0.13	0.29
		Energy Spacer Divided Light Grilles	0.30	0.13	0.29
		Full Divided Light Grilles	0.31	0.13	0.29
	Low-E4 SmartSun w/HeatLock	Without Grilles	0.27	0.14	0.32
		Simulated Divided Light Grilles	0.27	0.13	0.28
		Finelight Grilles	0.28	0.13	0.28
		Energy Spacer Divided Light Grilles	0.27	0.13	0.28
		Full Divided Light Grilles	0.29	0.13	0.28
A-Series Complementary Hinged Inswing Patio Doors Springline™ & Arch AND-N-127	Low-E4®	Without Grilles	0.33	0.24	0.41
		Simulated Divided Light Grilles	0.33	0.21	0.35
		Finelight™ Grilles	0.34	0.21	0.35
		Full Divided Light Grilles	0.34	0.21	0.35
	Low-E4 w/HeatLock®	Without Grilles	0.29	0.24	0.40
		Simulated Divided Light Grilles	0.29	0.21	0.34
		Finelight Grilles	0.31	0.21	0.34
		Full Divided Light Grilles	0.32	0.21	0.34
	Low-E4 Sun	Without Grilles	0.33	0.15	0.23
		Simulated Divided Light Grilles	0.33	0.13	0.20
		Finelight Grilles	0.34	0.13	0.20
		Full Divided Light Grilles	0.34	0.13	0.20
	Low-E4 SmartSun™	Without Grilles	0.32	0.16	0.37
		Simulated Divided Light Grilles	0.32	0.14	0.32
		Finelight Grilles	0.33	0.14	0.32
		Full Divided Light Grilles	0.34	0.14	0.32
	Low-E4 SmartSun w/HeatLock	Without Grilles	0.29	0.16	0.36
		Simulated Divided Light Grilles	0.29	0.14	0.31
		Finelight Grilles	0.30	0.14	0.31
		Full Divided Light Grilles	0.32	0.14	0.31
A-Series Complementary Hinged Outswing Patio Doors Springline & Arch AND-N-127	Low-E4®	Without Grilles	0.33	0.25	0.41
		Simulated Divided Light Grilles	0.33	0.22	0.35
		Finelight™ Grilles	0.35	0.22	0.35
		Full Divided Light Grilles	0.35	0.22	0.35
	Low-E4 w/HeatLock®	Without Grilles	0.30	0.24	0.40
		Simulated Divided Light Grilles	0.30	0.21	0.34
		Finelight Grilles	0.31	0.21	0.34
		Full Divided Light Grilles	0.33	0.21	0.34
	Low-E4 Sun	Without Grilles	0.33	0.16	0.23
		Simulated Divided Light Grilles	0.33	0.14	0.20
		Finelight Grilles	0.35	0.14	0.20
		Full Divided Light Grilles	0.35	0.14	0.20
	Low-E4 SmartSun™	Without Grilles	0.33	0.17	0.37
		Simulated Divided Light Grilles	0.33	0.15	0.32
		Finelight Grilles	0.34	0.15	0.32
		Full Divided Light Grilles	0.34	0.15	0.32
	Low-E4 SmartSun w/HeatLock	Without Grilles	0.30	0.16	0.36
		Simulated Divided Light Grilles	0.30	0.14	0.31
		Finelight Grilles	0.31	0.14	0.31
		Full Divided Light Grilles	0.32	0.14	0.31

Andersen® Product	High-Performance Dual-Pane Glass Type		U-Factor[1]	SHGC[2]	VT[3]
A-Series Complementary Patio Door Sidelights Arch AND-N-131	Low-E4®	Without Grilles	0.32	0.23	0.39
		Simulated Divided Light Grilles	0.32	0.21	0.34
		Finelight™ Grilles	0.34	0.21	0.34
		Full Divided Light Grilles	0.33	0.21	0.34
	Low-E4 w/HeatLock®	Without Grilles	0.29	0.23	0.38
		Simulated Divided Light Grilles	0.29	0.21	0.34
		Finelight Grilles	0.30	0.21	0.34
		Full Divided Light Grilles	0.31	0.21	0.34
	Low-E4 Sun	Without Grilles	0.33	0.15	0.22
		Simulated Divided Light Grilles	0.33	0.13	0.19
		Finelight Grilles	0.34	0.13	0.19
		Full Divided Light Grilles	0.33	0.13	0.19
	Low-E4 SmartSun™	Without Grilles	0.32	0.16	0.35
		Simulated Divided Light Grilles	0.32	0.14	0.31
		Finelight Grilles	0.33	0.14	0.31
		Full Divided Light Grilles	0.33	0.14	0.31
	Low-E4 SmartSun w/HeatLock	Without Grilles	0.29	0.15	0.34
		Simulated Divided Light Grilles	0.29	0.14	0.30
		Finelight Grilles	0.30	0.14	0.30
		Full Divided Light Grilles	0.31	0.14	0.30

• "Low-E4®," "Low-E4® SmartSun™," "Low-E4® Sun" and "HeatLock®" are Andersen trademarks for "Low-E" glass. 1) U-Factor defines the amount of heat loss through the total unit in BTU/hr-ft^2-°F. The lower the value, the less heat is lost through the entire product. Window values represent non-tempered glass. Use of tempered glass can increase U-Factor ratings. See andersenwindows.com/nfrc for specific performance values. Door values represent tempered glass. 2) Solar Heat Gain Coefficient (SHGC) defines the fraction of solar radiation admitted through the glass directly transmitted, as well as absorbed and subsequently released inward. The lower the value, the less heat is transmitted through the product. 3) Visible Transmittance (VT) measures how much light comes through a product (glass and frame). The higher the value, from 0 to 1, the more daylight the product lets in over the product's total unit area. Visible Light Transmittance is measured over the 380 to 760 nanometer portion of the solar spectrum.

• NFRC ratings are based on modeling by a third-party agency as validated by an independent test lab in compliance with NFRC program and procedural requirements.

• This data is accurate as of November 2022. Due to ongoing product changes, updated test results, or new industry standards or requirements, this data may change over time. Ratings are for sizes specified by NFRC for testing and certification. Ratings may vary depending on use of tempered glass, different grille options, glass with capillary breather tubes for high altitudes, etc.

• Values are for single units with given pane thickness and $^3/_4$" (19 mm) grilles for windows and 1" (25 mm) grilles for door products.

Andersen® NFRC Certified Total Unit Performance – Triple-Pane Glass

For current performance information, please visit **andersenwindows.com**.

Andersen® Product	High-Performance Triple-Pane Glass Type		U-Factor[1]	SHGC[2]	VT[3]
A-Series Casement Windows AND-N-86	Low-E4®	Without Grilles	0.25	0.25	0.41
		Simulated Divided Light Grilles	0.25	0.23	0.37
		Finelight™ Grilles	0.25	0.23	0.37
		Full Divided Light Grilles	-	-	-
	Low-E4 Enhanced	Without Grilles	0.21	0.24	0.40
		Simulated Divided Light Grilles	0.21	0.22	0.36
		Finelight Grilles	0.22	0.22	0.36
		Full Divided Light Grilles	-	-	-
	Low-E4 Enhanced w/HeatLock®	Without Grilles	0.20	0.23	0.39
		Simulated Divided Light Grilles	0.20	0.21	0.35
		Finelight Grilles	0.20	0.21	0.35
		Full Divided Light Grilles	-	-	-
	Low-E4 SmartSun™	Without Grilles	0.24	0.17	0.37
		Simulated Divided Light Grilles	0.24	0.15	0.34
		Finelight Grilles	0.25	0.15	0.34
		Full Divided Light Grilles	-	-	-
	Low-E4 SmartSun Enhanced	Without Grilles	0.21	0.16	0.36
		Simulated Divided Light Grilles	0.21	0.15	0.32
		Finelight Grilles	0.21	0.15	0.32
		Full Divided Light Grilles	-	-	--
	Low-E4 SmartSun Enhanced w/HeatLock	Without Grilles	0.20	0.16	0.35
		Simulated Divided Light Grilles	0.20	0.14	0.32
		Finelight Grilles	0.20	0.14	0.32
		Full Divided Light Grilles	-	-	-
A-Series Awning Windows AND-N-87	Low-E4®	Without Grilles	0.25	0.24	0.40
		Simulated Divided Light Grilles	0.25	0.22	0.36
		Finelight™ Grilles	0.25	0.22	0.36
		Full Divided Light Grilles	-	-	-
	Low-E4 Enhanced	Without Grilles	0.22	0.23	0.38
		Simulated Divided Light Grilles	0.22	0.21	0.35
		Finelight Grilles	0.22	0.21	0.35
		Full Divided Light Grilles	-	-	-
	Low-E4 Enhanced w/HeatLock®	Without Grilles	0.20	0.22	0.38
		Simulated Divided Light Grilles	0.20	0.20	0.34
		Finelight Grilles	0.20	0.20	0.34
		Full Divided Light Grilles	-	-	-
	Low-E4 SmartSun™	Without Grilles	0.24	0.16	0.36
		Simulated Divided Light Grilles	0.24	0.15	0.32
		Finelight Grilles	0.25	0.15	0.32
		Full Divided Light Grilles	-	-	-
	Low-E4 SmartSun Enhanced	Without Grilles	0.22	0.16	0.35
		Simulated Divided Light Grilles	0.22	0.14	0.31
		Finelight Grilles	0.22	0.14	0.31
		Full Divided Light Grilles	-	-	-
	Low-E4 SmartSun Enhanced w/HeatLock	Without Grilles	0.20	0.15	0.34
		Simulated Divided Light Grilles	0.20	0.14	0.30
		Finelight Grilles	0.20	0.14	0.30
		Full Divided Light Grilles	-	-	-
A-Series Double-Hung Windows AND-N-91	Low-E4®	Without Grilles	0.26	0.28	0.47
		Simulated Divided Light Grilles	0.26	0.25	0.42
		Finelight™ Grilles	0.26	0.25	0.42
		Full Divided Light Grilles	-	-	-
	Low-E4 Enhanced	Without Grilles	0.22	0.27	0.46
		Simulated Divided Light Grilles	0.22	0.25	0.40
		Finelight Grilles	0.23	0.25	0.40
		Full Divided Light Grilles	-	-	-
	Low-E4 Enhanced w/HeatLock®	Without Grilles	0.20	0.26	0.44
		Simulated Divided Light Grilles	0.20	0.23	0.39
		Finelight Grilles	0.21	0.23	0.39
		Full Divided Light Grilles	-	-	-
	Low-E4 SmartSun™	Without Grilles	0.26	0.19	0.43
		Simulated Divided Light Grilles	0.26	0.17	0.38
		Finelight Grilles	0.26	0.17	0.38
		Full Divided Light Grilles	-	-	-
	Low-E4 SmartSun Enhanced	Without Grilles	0.22	0.18	0.41
		Simulated Divided Light Grilles	0.22	0.16	0.36
		Finelight Grilles	0.22	0.16	0.36
		Full Divided Light Grilles	-	-	-
	Low-E4 SmartSun Enhanced w/HeatLock	Without Grilles	0.20	0.18	0.40
		Simulated Divided Light Grilles	0.20	0.16	0.36
		Finelight Grilles	0.21	0.16	0.36
		Full Divided Light Grilles	-	-	-

Andersen® Product	High-Performance Triple-Pane Glass Type		U-Factor[1]	SHGC[2]	VT[3]
A-Series Picture Windows AND-N-88	Low-E4®	Without Grilles	0.24	0.29	0.49
		Simulated Divided Light Grilles	0.24	0.26	0.43
		Finelight™ Grilles	0.24	0.26	0.43
		Full Divided Light Grilles	-	-	-
	Low-E4 Enhanced	Without Grilles	0.20	0.28	0.47
		Simulated Divided Light Grilles	0.20	0.25	0.42
		Finelight Grilles	0.20	0.25	0.42
		Full Divided Light Grilles	-	-	-
	Low-E4 Enhanced w/HeatLock®	Without Grilles	0.18	0.27	0.46
		Simulated Divided Light Grilles	0.18	0.24	0.41
		Finelight Grilles	0.18	0.24	0.41
		Full Divided Light Grilles	-	-	-
	Low-E4 SmartSun™	Without Grilles	0.23	0.20	0.44
		Simulated Divided Light Grilles	0.23	0.18	0.39
		Finelight Grilles	0.24	0.18	0.39
		Full Divided Light Grilles	-	-	-
	Low-E4 SmartSun Enhanced	Without Grilles	0.20	0.19	0.42
		Simulated Divided Light Grilles	0.20	0.17	0.38
		Finelight Grilles	0.20	0.17	0.38
		Full Divided Light Grilles	-	-	-
	Low-E4 SmartSun Enhanced w/HeatLock	Without Grilles	0.18	0.18	0.41
		Simulated Divided Light Grilles	0.18	0.17	0.37
		Finelight Grilles	0.18	0.17	0.37
		Full Divided Light Grilles	-	-	-
A-Series Venting Transom Windows AND-N-90	Low-E4®	Without Grilles	0.25	0.25	0.42
		Simulated Divided Light Grilles	0.25	0.23	0.38
		Finelight™ Grilles	0.25	0.23	0.38
		Full Divided Light Grilles	-	-	-
	Low-E4 Enhanced	Without Grilles	0.22	0.24	0.40
		Simulated Divided Light Grilles	0.22	0.22	0.36
		Finelight Grilles	0.22	0.22	0.36
		Full Divided Light Grilles	-	-	-
	Low-E4 Enhanced w/HeatLock®	Without Grilles	0.20	0.23	0.39
		Simulated Divided Light Grilles	0.20	0.21	0.36
		Finelight Grilles	0.20	0.21	0.36
		Full Divided Light Grilles	-	-	-
	Low-E4 SmartSun™	Without Grilles	0.25	0.17	0.38
		Simulated Divided Light Grilles	0.25	0.15	0.34
		Finelight Grilles	0.25	0.15	0.34
		Full Divided Light Grilles	-	-	-
	Low-E4 SmartSun Enhanced	Without Grilles	0.22	0.16	0.36
		Simulated Divided Light Grilles	0.22	0.15	0.33
		Finelight Grilles	0.22	0.15	0.33
		Full Divided Light Grilles	-	-	-
	Low-E4 SmartSun Enhanced w/HeatLock	Without Grilles	0.20	0.16	0.36
		Simulated Divided Light Grilles	0.20	0.14	0.32
		Finelight Grilles	0.20	0.14	0.32
		Full Divided Light Grilles	-	-	-

continued on next page

• "Low-E4®," "Low-E4® SmartSun™," "Low-E4® Sun" and "HeatLock®" are Andersen trademarks for "Low-E" glass. 1) U-Factor defines the amount of heat loss through the total unit in BTU/hr-ft²-°F. The lower the value, the less heat is lost through the entire product. Window values represent non-tempered glass. Use of tempered glass can increase U-Factor ratings. See andersenwindows.com/nfrc for specific performance values. Door values represent tempered glass. 2) Solar Heat Gain Coefficient (SHGC) defines the fraction of solar radiation admitted through the glass directly transmitted, as well as absorbed and subsequently released inward. The lower the value, the less heat is transmitted through the product. 3) Visible Transmittance (VT) measures how much light comes through a product (glass and frame). The higher the value, from 0 to 1, the more daylight the product lets in over the product's total unit area. Visible Light Transmittance is measured over the 380 to 760 nanometer portion of the solar spectrum.

• NFRC ratings are based on modeling by a third-party agency as validated by an independent test lab in compliance with NFRC program and procedural requirements.

• This data is accurate as of November 2022. Due to ongoing product changes, updated test results, or new industry standards or requirements, this data may change over time. Ratings are for sizes specified by NFRC for testing and certification. Ratings may vary depending on use of tempered glass, different grille options, glass with capillary breather tubes for high altitudes, etc.

• Values are for single units with given pane thickness and 3/4" (19 mm) grilles for windows and door products.

Andersen® NFRC Certified Total Unit Performance – Triple-Pane Glass *(continued)*

For current performance information, please visit **andersenwindows.com**.

Andersen® Product	High-Performance Triple-Pane Glass Type		U-Factor[1]	SHGC[2]	VT[3]
A-Series Fixed Transom Windows AND-N-89	Low-E4®	Without Grilles	0.24	0.29	0.50
		Simulated Divided Light Grilles	0.24	0.26	0.44
		Finelight™ Grilles	0.24	0.26	0.44
		Full Divided Light Grilles	-	-	-
	Low-E4 Enhanced	Without Grilles	0.20	0.28	0.48
		Simulated Divided Light Grilles	0.20	0.26	0.42
		Finelight Grilles	0.20	0.26	0.42
		Full Divided Light Grilles	-	-	-
	Low-E4 Enhanced w/HeatLock®	Without Grilles	0.18	0.27	0.47
		Simulated Divided Light Grilles	0.18	0.24	0.41
		Finelight Grilles	0.18	0.24	0.41
		Full Divided Light Grilles	-	-	-
	Low-E4 SmartSun™	Without Grilles	0.23	0.20	0.45
		Simulated Divided Light Grilles	0.23	0.18	0.40
		Finelight Grilles	0.24	0.18	0.40
		Full Divided Light Grilles	-	-	-
	Low-E4 SmartSun Enhanced	Without Grilles	0.20	0.19	0.43
		Simulated Divided Light Grilles	0.20	0.17	0.38
		Finelight Grilles	0.20	0.17	0.38
		Full Divided Light Grilles	-	-	-
	Low-E4 SmartSun Enhanced w/HeatLock	Without Grilles	0.18	0.18	0.42
		Simulated Divided Light Grilles	0.18	0.17	0.37
		Finelight Grilles	0.18	0.17	0.37
		Full Divided Light Grilles	-	-	-
A-Series Specialty Windows Direct-Set AND-N-126	Low-E4®	Without Grilles	0.22	0.33	0.56
		Simulated Divided Light Grilles	0.22	0.29	0.50
		Finelight™ Grilles	0.23	0.29	0.50
		Full Divided Light Grilles	0.23	0.29	0.50
	Low-E4 Enhanced	Without Grilles	0.18	0.32	0.53
		Simulated Divided Light Grilles	0.18	0.29	0.48
		Finelight Grilles	0.18	0.29	0.48
		Full Divided Light Grilles	0.18	0.29	0.48
	Low-E4 Enhanced w/HeatLock®	Without Grilles	0.16	0.30	0.52
		Simulated Divided Light Grilles	0.16	0.28	0.47
		Finelight Grilles	0.16	0.28	0.47
		Full Divided Light Grilles	0.17	0.28	0.47
	Low-E4 SmartSun™	Without Grilles	0.22	0.22	0.50
		Simulated Divided Light Grilles	0.22	0.20	0.45
		Finelight Grilles	0.23	0.20	0.45
		Full Divided Light Grilles	0.23	0.20	0.45
	Low-E4 SmartSun Enhanced	Without Grilles	0.17	0.21	0.48
		Simulated Divided Light Grilles	0.17	0.19	0.43
		Finelight Grilles	0.17	0.19	0.43
		Full Divided Light Grilles	0.18	0.19	0.43
	Low-E4 SmartSun Enhanced w/HeatLock	Without Grilles	0.16	0.20	0.47
		Simulated Divided Light Grilles	0.16	0.18	0.42
		Finelight Grilles	0.16	0.18	0.42
		Full Divided Light Grilles	0.17	0.18	0.42
A-Series Specialty Windows Sash-Set AND-N-128	Low-E4®	Without Grilles	0.23	0.29	0.50
		Simulated Divided Light Grilles	0.23	0.27	0.44
		Finelight™ Grilles	0.24	0.27	0.44
		Full Divided Light Grilles	0.24	0.27	0.44
	Low-E4 Enhanced	Without Grilles	0.19	0.29	0.48
		Simulated Divided Light Grilles	0.19	0.26	0.43
		Finelight Grilles	0.19	0.26	0.43
		Full Divided Light Grilles	0.19	0.26	0.43
	Low-E4 Enhanced w/HeatLock®	Without Grilles	0.17	0.28	0.47
		Simulated Divided Light Grilles	0.17	0.25	0.42
		Finelight Grilles	0.18	0.25	0.42
		Full Divided Light Grilles	0.18	0.25	0.42
	Low-E4 SmartSun™	Without Grilles	0.23	0.19	0.45
		Simulated Divided Light Grilles	0.23	0.18	0.40
		Finelight Grilles	0.23	0.18	0.40
		Full Divided Light Grilles	0.23	0.18	0.40
	Low-E4 SmartSun Enhanced	Without Grilles	0.18	0.19	0.43
		Simulated Divided Light Grilles	0.18	0.17	0.39
		Finelight Grilles	0.19	0.17	0.39
		Full Divided Light Grilles	0.19	0.17	0.39
	Low-E4 SmartSun Enhanced w/HeatLock	Without Grilles	0.17	0.18	0.42
		Simulated Divided Light Grilles	0.17	0.17	0.38
		Finelight Grilles	0.17	0.17	0.38
		Full Divided Light Grilles	0.18	0.17	0.38

Andersen® Product	High-Performance Triple-Pane Glass Type		U-Factor[1]	SHGC[2]	VT[3]
A-Series Gliding Patio Doors Traditional Panels AND-N-99	Low-E4®	Without Grilles	0.28	0.25	0.41
		Simulated Divided Light Grilles	0.28	0.22	0.35
		Finelight™ Grilles	0.28	0.22	0.35
		Full Divided Light Grilles	-	-	-
	Low-E4 Enhanced	Without Grilles	0.25	0.24	0.40
		Simulated Divided Light Grilles	0.25	0.21	0.34
		Finelight Grilles	0.25	0.21	0.34
		Full Divided Light Grilles	-	-	-
	Low-E4 Enhanced w/HeatLock®	Without Grilles	0.23	0.23	0.39
		Simulated Divided Light Grilles	0.23	0.20	0.33
		Finelight Grilles	0.23	0.20	0.33
		Full Divided Light Grilles	-	-	-
	Low-E4 SmartSun™	Without Grilles	0.27	0.17	0.37
		Simulated Divided Light Grilles	0.27	0.15	0.32
		Finelight Grilles	0.28	0.15	0.32
		Full Divided Light Grilles	-	-	-
	Low-E4 SmartSun Enhanced	Without Grilles	0.24	0.16	0.36
		Simulated Divided Light Grilles	0.24	0.14	0.31
		Finelight Grilles	0.25	0.14	0.31
		Full Divided Light Grilles	-	-	-
	Low-E4 SmartSun Enhanced w/HeatLock	Without Grilles	0.23	0.16	0.35
		Simulated Divided Light Grilles	0.23	0.14	0.30
		Finelight Grilles	0.23	0.14	0.30
		Full Divided Light Grilles	-	-	-
A-Series Gliding Patio Doors Contemporary Panels AND-N-212	Low-E4®	Without Grilles	0.27	0.26	0.44
		Simulated Divided Light Grilles	0.27	0.23	0.38
		Finelight™ Grilles	0.28	0.23	0.38
		Full Divided Light Grilles	-	-	-
	Low-E4 Enhanced	Without Grilles	0.24	0.26	0.42
		Simulated Divided Light Grilles	0.24	0.22	0.36
		Finelight Grilles	0.24	0.22	0.36
		Full Divided Light Grilles	-	-	-
	Low-E4 Enhanced w/HeatLock®	Without Grilles	0.22	0.24	0.41
		Simulated Divided Light Grilles	0.22	0.22	0.36
		Finelight Grilles	0.22	0.22	0.36
		Full Divided Light Grilles	-	-	-
	Low-E4 SmartSun™	Without Grilles	0.27	0.18	0.39
		Simulated Divided Light Grilles	0.27	0.16	0.34
		Finelight Grilles	0.27	0.16	0.34
		Full Divided Light Grilles	-	-	-
	Low-E4 SmartSun Enhanced	Without Grilles	0.24	0.17	0.38
		Simulated Divided Light Grilles	0.24	0.15	0.33
		Finelight Grilles	0.24	0.15	0.33
		Full Divided Light Grilles	-	-	-
	Low-E4 SmartSun Enhanced w/HeatLock	Without Grilles	0.22	0.16	0.37
		Simulated Divided Light Grilles	0.22	0.15	0.32
		Finelight Grilles	0.22	0.15	0.32
		Full Divided Light Grilles	-	-	-

continued on next page

• "Low-E4®," "Low-E4® SmartSun™," "Low-E4® Sun" and "HeatLock®" are Andersen trademarks for "Low-E" glass. 1) U-Factor defines the amount of heat loss through the total unit in BTU/hr-ft²-°F. The lower the value, the less heat is lost through the entire product. Window values represent non-tempered glass. Use of tempered glass can increase U-Factor ratings. See andersenwindows.com/nfrc for specific performance values. Door values represent tempered glass. 2) Solar Heat Gain Coefficient (SHGC) defines the fraction of solar radiation admitted through the glass directly transmitted, as well as absorbed and subsequently released inward. The lower the value, the less heat is transmitted through the product. 3) Visible Transmittance (VT) measures how much light comes through a product (glass and frame). The higher the value, from 0 to 1, the more daylight the product lets in over the product's total unit area. Visible Light Transmittance is measured over the 380 to 760 nanometer portion of the solar spectrum.

• NFRC ratings are based on modeling by a third-party agency as validated by an independent test lab in compliance with NFRC program and procedural requirements.

• This data is accurate as of November 2022. Due to ongoing product changes, updated test results, or new industry standards or requirements, this data may change over time. Ratings are for sizes specified by NFRC for testing and certification. Ratings may vary depending on use of tempered glass, different grille options, glass with capillary breather tubes for high altitudes, etc.

• Values are for single units with given pane thickness and 3/4" (19 mm) grilles for windows and door products.

Andersen® NFRC Certified Total Unit Performance – Triple-Pane Glass *(continued)*

For current performance information, please visit **andersenwindows.com**.

Andersen® Product	High-Performance Triple-Pane Glass Type		U-Factor[1]	SHGC[2]	VT[3]
A-Series Hinged Inswing Patio Doors Traditional Panels AND-N-92	Low-E4®	Without Grilles	0.28	0.22	0.37
		Simulated Divided Light Grilles	0.28	0.19	0.32
		Finelight™ Grilles	0.28	0.19	0.32
		Full Divided Light Grilles	-	-	-
	Low-E4 Enhanced	Without Grilles	0.25	0.22	0.36
		Simulated Divided Light Grilles	0.25	0.19	0.31
		Finelight Grilles	0.26	0.19	0.31
		Full Divided Light Grilles	-	-	-
	Low-E4 Enhanced w/HeatLock®	Without Grilles	0.24	0.21	0.35
		Simulated Divided Light Grilles	0.24	0.18	0.30
		Finelight Grilles	0.24	0.18	0.30
		Full Divided Light Grilles	-	-	-
	Low-E4 SmartSun™	Without Grilles	0.28	0.15	0.34
		Simulated Divided Light Grilles	0.28	0.13	0.29
		Finelight Grilles	0.29	0.13	0.29
		Full Divided Light Grilles	-	-	-
	Low-E4 SmartSun Enhanced	Without Grilles	0.25	0.15	0.32
		Simulated Divided Light Grilles	0.25	0.13	0.28
		Finelight Grilles	0.26	0.13	0.28
		Full Divided Light Grilles	-	-	-
	Low-E4 SmartSun Enhanced w/HeatLock	Without Grilles	0.24	0.14	0.32
		Simulated Divided Light Grilles	0.24	0.12	0.27
		Finelight Grilles	0.24	0.12	0.27
		Full Divided Light Grilles	-	-	-
A-Series Hinged Inswing Patio Doors Contemporary Panels AND-N-211	Low-E4®	Without Grilles	0.28	0.24	0.40
		Simulated Divided Light Grilles	0.28	0.21	0.34
		Finelight™ Grilles	0.28	0.21	0.34
		Full Divided Light Grilles	-	-	-
	Low-E4 Enhanced	Without Grilles	0.25	0.23	0.38
		Simulated Divided Light Grilles	0.25	0.20	0.33
		Finelight Grilles	0.25	0.20	0.33
		Full Divided Light Grilles	-	-	-
	Low-E4 Enhanced w/HeatLock®	Without Grilles	0.23	0.22	0.37
		Simulated Divided Light Grilles	0.23	0.19	0.32
		Finelight Grilles	0.24	0.19	0.32
		Full Divided Light Grilles	-	-	-
	Low-E4 SmartSun™	Without Grilles	0.27	0.16	0.36
		Simulated Divided Light Grilles	0.27	0.14	0.31
		Finelight Grilles	0.29	0.14	0.31
		Full Divided Light Grilles	-	-	-
	Low-E4 SmartSun Enhanced	Without Grilles	0.25	0.15	0.34
		Simulated Divided Light Grilles	0.25	0.14	0.29
		Finelight Grilles	0.25	0.14	0.29
		Full Divided Light Grilles	-	-	-
	Low-E4 SmartSun Enhanced w/HeatLock	Without Grilles	0.23	0.15	0.33
		Simulated Divided Light Grilles	0.23	0.13	0.29
		Finelight Grilles	0.23	0.13	0.29
		Full Divided Light Grilles	-	-	-
A-Series Hinged Outswing Patio Doors Traditional Panels AND-N-93	Low-E4®	Without Grilles	0.28	0.23	0.37
		Simulated Divided Light Grilles	0.28	0.20	0.32
		Finelight™ Grilles	0.28	0.20	0.32
		Full Divided Light Grilles	-	-	-
	Low-E4 Enhanced	Without Grilles	0.25	0.22	0.36
		Simulated Divided Light Grilles	0.25	0.19	0.31
		Finelight Grilles	0.25	0.19	0.31
		Full Divided Light Grilles	-	-	-
	Low-E4 Enhanced w/HeatLock®	Without Grilles	0.24	0.21	0.35
		Simulated Divided Light Grilles	0.24	0.19	0.30
		Finelight Grilles	0.24	0.19	0.30
		Full Divided Light Grilles	-	-	--
	Low-E4 SmartSun™	Without Grilles	0.28	0.15	0.34
		Simulated Divided Light Grilles	0.28	0.14	0.29
		Finelight Grilles	0.28	0.14	0.29
		Full Divided Light Grilles	-	-	-
	Low-E4 SmartSun Enhanced	Without Grilles	0.25	0.15	0.32
		Simulated Divided Light Grilles	0.25	0.13	0.28
		Finelight Grilles	0.25	0.13	0.28
		Full Divided Light Grilles	-	-	-
	Low-E4 SmartSun Enhanced w/HeatLock	Without Grilles	0.23	0.14	0.32
		Simulated Divided Light Grilles	0.23	0.13	0.27
		Finelight Grilles	0.24	0.13	0.27
		Full Divided Light Grilles	-	-	-

Andersen® Product	High-Performance Triple-Pane Glass Type		U-Factor[1]	SHGC[2]	VT[3]
A-Series Hinged Outswing Patio Doors Contemporary Panels AND-N-210	Low-E4®	Without Grilles	0.27	0.24	0.40
		Simulated Divided Light Grilles	0.27	0.21	0.34
		Finelight™ Grilles	0.28	0.21	0.34
		Full Divided Light Grilles	-	-	-
	Low-E4 Enhanced	Without Grilles	0.24	0.23	0.38
		Simulated Divided Light Grilles	0.24	0.20	0.33
		Finelight Grilles	0.25	0.20	0.33
		Full Divided Light Grilles	-	-	-
	Low-E4 Enhanced w/HeatLock®	Without Grilles	0.23	0.22	0.37
		Simulated Divided Light Grilles	0.23	0.20	0.32
		Finelight Grilles	0.23	0.20	0.32
		Full Divided Light Grilles	-	-	--
	Low-E4 SmartSun™	Without Grilles	0.27	0.16	0.36
		Simulated Divided Light Grilles	0.27	0.14	0.31
		Finelight Grilles	0.28	0.14	0.31
		Full Divided Light Grilles	-	-	-
	Low-E4 SmartSun Enhanced	Without Grilles	0.24	0.16	0.34
		Simulated Divided Light Grilles	0.24	0.14	0.29
		Finelight Grilles	0.24	0.14	0.29
		Full Divided Light Grilles	-	-	-
	Low-E4 SmartSun Enhanced w/HeatLock	Without Grilles	0.23	0.15	0.33
		Simulated Divided Light Grilles	0.23	0.13	0.29
		Finelight Grilles	0.23	0.13	0.29
		Full Divided Light Grilles	-	-	-
A-Series Patio Door Sidelight Transoms Direct-Set AND-N-96	Low-E4®	Without Grilles	0.25	0.31	0.53
		Simulated Divided Light Grilles	0.25	0.29	0.48
		Finelight™ Grilles	0.25	0.29	0.48
		Full Divided Light Grilles	-	-	-
	Low-E4 Enhanced	Without Grilles	0.21	0.30	0.51
		Simulated Divided Light Grilles	0.21	0.28	0.46
		Finelight Grilles	0.21	0.28	0.46
		Full Divided Light Grilles	-	-	-
	Low-E4 Enhanced w/HeatLock®	Without Grilles	0.19	0.29	0.50
		Simulated Divided Light Grilles	0.19	0.27	0.45
		Finelight Grilles	0.19	0.27	0.45
		Full Divided Light Grilles	-	-	-
	Low-E4 SmartSun™	Without Grilles	0.24	0.21	0.48
		Simulated Divided Light Grilles	0.24	0.19	0.43
		Finelight Grilles	0.25	0.19	0.43
		Full Divided Light Grilles	-	-	-
	Low-E4 SmartSun Enhanced	Without Grilles	0.20	0.20	0.46
		Simulated Divided Light Grilles	0.20	0.19	0.42
		Finelight Grilles	0.20	0.19	0.42
		Full Divided Light Grilles	-	-	-
	Low-E4 SmartSun Enhanced w/HeatLock	Without Grilles	0.19	0.20	0.45
		Simulated Divided Light Grilles	0.19	0.18	0.41
		Finelight Grilles	0.19	0.18	0.41
		Full Divided Light Grilles	-	-	-

continued on next page

• "Low-E4®," "Low-E4® SmartSun™," "Low-E4® Sun" and "HeatLock®" are Andersen trademarks for "Low-E" glass. 1) U-Factor defines the amount of heat loss through the total unit in BTU/hr-ft²-°F. The lower the value, the less heat is lost through the entire product. Window values represent non-tempered glass. Use of tempered glass can increase U-Factor ratings. See andersenwindows.com/nfrc for specific performance values. Door values represent tempered glass. 2) Solar Heat Gain Coefficient (SHGC) defines the fraction of solar radiation admitted through the glass directly transmitted, as well as absorbed and subsequently released inward. The lower the value, the less heat is transmitted through the product. 3) Visible Transmittance (VT) measures how much light comes through a product (glass and frame). The higher the value, from 0 to 1, the more daylight the product lets in over the product's total unit area. Visible Light Transmittance is measured over the 380 to 760 nanometer portion of the solar spectrum.

• NFRC ratings are based on modeling by a third-party agency as validated by an independent test lab in compliance with NFRC program and procedural requirements.

• This data is accurate as of November 2022. Due to ongoing product changes, updated test results, or new industry standards or requirements, this data may change over time. Ratings are for sizes specified by NFRC for testing and certification. Ratings may vary depending on use of tempered glass, different grille options, glass with capillary breather tubes for high altitudes, etc.

• Values are for single units with given pane thickness and ¾" (19 mm) grilles for windows and door products.

Andersen® NFRC Certified Total Unit Performance – Triple-Pane Glass *(continued)*

For current performance information, please visit **andersenwindows.com**.

Andersen® Product	High-Performance Triple-Pane Glass Type		U-Factor[1]	SHGC[2]	VT[3]
A-Series Patio Door Sidelight Transoms Sash-Set AND-N-95	Low-E4®	Without Grilles	0.27	0.24	0.40
		Simulated Divided Light Grilles	0.27	0.22	0.35
		Finelight™ Grilles	0.27	0.22	0.35
		Full Divided Light Grilles	-	-	-
	Low-E4 Enhanced	Without Grilles	0.24	0.23	0.38
		Simulated Divided Light Grilles	0.24	0.21	0.34
		Finelight Grilles	0.24	0.21	0.34
		Full Divided Light Grilles	-	-	-
	Low-E4 Enhanced w/HeatLock®	Without Grilles	0.22	0.22	0.37
		Simulated Divided Light Grilles	0.22	0.20	0.33
		Finelight Grilles	0.22	0.20	0.33
		Full Divided Light Grilles	-	-	-
	Low-E4 SmartSun™	Without Grilles	0.26	0.16	0.36
		Simulated Divided Light Grilles	0.26	0.15	0.32
		Finelight Grilles	0.27	0.15	0.32
		Full Divided Light Grilles	-	-	-
	Low-E4 SmartSun Enhanced	Without Grilles	0.24	0.16	0.34
		Simulated Divided Light Grilles	0.24	0.14	0.31
		Finelight Grilles	0.24	0.14	0.31
		Full Divided Light Grilles	-	-	-
	Low-E4 SmartSun Enhanced w/HeatLock	Without Grilles	0.22	0.15	0.33
		Simulated Divided Light Grilles	0.22	0.14	0.30
		Finelight Grilles	0.22	0.14	0.30
		Full Divided Light Grilles	-	-	-
A-Series Patio Door Transoms Direct-Set AND-N-96	Low-E4®	Without Grilles	0.25	0.31	0.53
		Simulated Divided Light Grilles	0.25	0.29	0.48
		Finelight™ Grilles	0.25	0.29	0.48
		Full Divided Light Grilles	-	-	-
	Low-E4 Enhanced	Without Grilles	0.21	0.30	0.51
		Simulated Divided Light Grilles	0.21	0.28	0.46
		Finelight Grilles	0.21	0.28	0.46
		Full Divided Light Grilles	-	-	-
	Low-E4 Enhanced w/HeatLock®	Without Grilles	0.19	0.29	0.50
		Simulated Divided Light Grilles	0.19	0.27	0.45
		Finelight Grilles	0.19	0.27	0.45
		Full Divided Light Grilles	-	-	-
	Low-E4 SmartSun™	Without Grilles	0.24	0.21	0.48
		Simulated Divided Light Grilles	0.24	0.19	0.43
		Finelight Grilles	0.25	0.19	0.43
		Full Divided Light Grilles	-	-	-
	Low-E4 SmartSun Enhanced	Without Grilles	0.20	0.20	0.46
		Simulated Divided Light Grilles	0.20	0.19	0.42
		Finelight Grilles	0.20	0.19	0.42
		Full Divided Light Grilles	-	-	-
	Low-E4 SmartSun Enhanced w/HeatLock	Without Grilles	0.19	0.20	0.45
		Simulated Divided Light Grilles	0.19	0.18	0.41
		Finelight Grilles	0.19	0.18	0.41
		Full Divided Light Grilles	-	-	-
A-Series Patio Door Transoms Sash-Set AND-N-95	Low-E4®	Without Grilles	0.27	0.23	0.38
		Simulated Divided Light Grilles	0.27	0.21	0.33
		Finelight™ Grilles	0.27	0.21	0.33
		Full Divided Light Grilles	-	-	-
	Low-E4 Enhanced	Without Grilles	0.24	0.22	0.36
		Simulated Divided Light Grilles	0.24	0.20	0.32
		Finelight Grilles	0.24	0.20	0.32
		Full Divided Light Grilles	-	-	-
	Low-E4 Enhanced w/HeatLock®	Without Grilles	0.23	0.21	0.35
		Simulated Divided Light Grilles	0.23	0.19	0.31
		Finelight Grilles	0.23	0.19	0.31
		Full Divided Light Grilles	-	-	-
	Low-E4 SmartSun™	Without Grilles	0.27	0.15	0.34
		Simulated Divided Light Grilles	0.27	0.14	0.30
		Finelight Grilles	0.27	0.14	0.30
		Full Divided Light Grilles	-	-	-
	Low-E4 SmartSun Enhanced	Without Grilles	0.24	0.15	0.33
		Simulated Divided Light Grilles	0.24	0.14	0.29
		Finelight Grilles	0.24	0.14	0.29
		Full Divided Light Grilles	-	-	-
	Low-E4 SmartSun Enhanced w/HeatLock	Without Grilles	0.23	0.15	0.32
		Simulated Divided Light Grilles	0.23	0.13	0.28
		Finelight Grilles	0.23	0.13	0.28
		Full Divided Light Grilles	-	-	-

Andersen® Product	High-Performance Triple-Pane Glass Type		U-Factor[1]	SHGC[2]	VT[3]
A-Series Patio Door Sidelights Traditional Panels AND-N-94	Low-E4®	Without Grilles	0.28	0.22	0.35
		Simulated Divided Light Grilles	0.28	0.20	0.31
		Finelight™ Grilles	0.28	0.20	0.31
		Full Divided Light Grilles	-	-	
	Low-E4 Enhanced	Without Grilles	0.25	0.21	0.34
		Simulated Divided Light Grilles	0.25	0.19	0.30
		Finelight Grilles	0.25	0.19	0.30
		Full Divided Light Grilles	-	-	-
	Low-E4 Enhanced w/HeatLock®	Without Grilles	0.24	0.20	0.33
		Simulated Divided Light Grilles	0.24	0.18	0.30
		Finelight Grilles	0.24	0.18	0.30
		Full Divided Light Grilles	-	-	-
	Low-E4 SmartSun™	Without Grilles	0.27	0.15	0.32
		Simulated Divided Light Grilles	0.27	0.13	0.28
		Finelight Grilles	0.28	0.13	0.28
		Full Divided Light Grilles	-	-	-
	Low-E4 SmartSun Enhanced	Without Grilles	0.25	0.14	0.31
		Simulated Divided Light Grilles	0.25	0.13	0.27
		Finelight Grilles	0.25	0.13	0.27
		Full Divided Light Grilles	-	-	-
	Low-E4 SmartSun Enhanced w/HeatLock	Without Grilles	0.23	0.14	0.30
		Simulated Divided Light Grilles	0.23	0.13	0.27
		Finelight Grilles	0.24	0.13	0.27
		Full Divided Light Grilles	-	-	-
A-Series Patio Door Sidelights Contemporary Panels AND-N-213	Low-E4®	Without Grilles	0.28	0.20	0.33
		Simulated Divided Light Grilles	0.28	0.18	0.29
		Finelight™ Grilles	0.29	0.18	0.29
		Full Divided Light Grilles	-	-	
	Low-E4 Enhanced	Without Grilles	0.26	0.20	0.32
		Simulated Divided Light Grilles	0.26	0.18	0.28
		Finelight Grilles	0.26	0.18	0.28
		Full Divided Light Grilles	-	-	-
	Low-E4 Enhanced w/HeatLock®	Without Grilles	0.24	0.19	0.31
		Simulated Divided Light Grilles	0.24	0.17	0.27
		Finelight Grilles	0.25	0.17	0.27
		Full Divided Light Grilles	-	-	-
	Low-E4 SmartSun™	Without Grilles	0.28	0.14	0.30
		Simulated Divided Light Grilles	0.28	0.13	0.26
		Finelight Grilles	0.28	0.13	0.26
		Full Divided Light Grilles	-	-	-
	Low-E4 SmartSun Enhanced	Without Grilles	0.26	0.13	0.29
		Simulated Divided Light Grilles	0.26	0.12	0.25
		Finelight Grilles	0.26	0.12	0.25
		Full Divided Light Grilles	-	-	-
	Low-E4 SmartSun Enhanced w/HeatLock	Without Grilles	0.24	0.13	0.28
		Simulated Divided Light Grilles	0.24	0.12	0.25
		Finelight Grilles	0.25	0.12	0.25
		Full Divided Light Grilles	-	-	-

• "Low-E4®," "Low-E4® SmartSun™," "Low-E4® Sun" and "HeatLock®" are Andersen trademarks for "Low-E" glass. 1) U-Factor defines the amount of heat loss through the total unit in BTU/hr-ft²-°F. The lower the value, the less heat is lost through the entire product. Window values represent non-tempered glass. Use of tempered glass can increase U-Factor ratings. See andersenwindows.com/nfrc for specific performance values. Door values represent tempered glass. 2) Solar Heat Gain Coefficient (SHGC) defines the fraction of solar radiation admitted through the glass directly transmitted, as well as absorbed and subsequently released inward. The lower the value, the less heat is transmitted through the product. 3) Visible Transmittance (VT) measures how much light comes through a product (glass and frame). The higher the value, from 0 to 1, the more daylight the product lets in over the product's total unit area. Visible Light Transmittance is measured over the 380 to 760 nanometer portion of the solar spectrum.

• NFRC ratings are based on modeling by a third-party agency as validated by an independent test lab in compliance with NFRC program and procedural requirements.

• This data is accurate as of November 2022. Due to ongoing product changes, updated test results, or new industry standards or requirements, this data may change over time. Ratings are for sizes specified by NFRC for testing and certification. Ratings may vary depending on use of tempered glass, different grille options, glass with capillary breather tubes for high altitudes, etc.

• Values are for single units with given pane thickness and 3/4" (19 mm) grilles for windows and door products.

About the Label

Look for this certification label on every window and patio door you buy. The NFRC section was designed by the National Fenestration Rating Council to provide accurate information that helps you promote the energy efficiency of the homes you build. These ratings allow you – and your customers – to measure and compare the energy performance of similar products. If the product does not have this label, the NFRC has not verified its claims.

About the NFRC

The National Fenestration Rating Council (NFRC) is a nonpartisan coalition of professionals whose purpose is to provide fair, accurate and credible energy performance ratings for fenestration products. NFRC's membership includes manufacturers, suppliers, designers, specifiers, utility companies, government agencies and other building industry representatives.

Andersen Corporation is a founding member of the NFRC and continues to support its work by providing fair, accurate and credible energy performance ratings to consumers and the building industry. If you have any questions about the NFRC, its program or energy performance ratings, write them at: NFRC, 6305 Ivy Lane, Suite 410, Greenbelt, MD 20770. Phone: 301-589-1776. Website: **nfrc.org**

Energy Rating (ER) represents "Energy Rating" and is a rating used in Canada for product comparison purposes (the higher the ER number, the more energy saved during the heating season).

ENERGY STAR® Climate Zone Map is based on U-Factor and solar heat gain coefficient criteria for specific ENERGY STAR climate zones within the United States and Canada. The shading of the map shows which climate zone(s) a particular product and glass type is ENERGY STAR certified in.

U-Factor indicates how well a product prevents heat from escaping (the lower the number, the better).

Solar Heat Gain Coefficient measures how well a product blocks heat caused by sunlight (the lower the number, the more it will help reduce the use of air conditioning and as a result, reduce electrical bills and energy use).

Visible Transmittance refers to how much visible light comes through a product (the closer to 1.0, the more light is transmitted).

WDMA Hallmark Certification verifies the performance ratings of this product were tested by an independent testing laboratory and verified by a third-party certification program.

Test Standards

Performance Grade (PG) and **Design Pressure (DP) Ratings**

Glass Construction used with this product type.

ENERGY STAR Version 7.0 is coming October 23, 2023. For more details, visit **andersenwindows.com/energystar**.

• NFRC ratings are based on modeling by a third-party agency as validated by an independent test lab in compliance with NFRC program and procedural requirements.
• "ENERGY STAR" is a registered trademark of the U.S. Environmental Protection Agency.

INSTALLATION ACCESSORIES

Optional installation accessories are available for the installation of Andersen® windows and patio doors. Keep installation instructions and safety information in mind when considering the installation and use of any Andersen product. For questions, contact your local Andersen supplier.

COIL STOCK

Andersen aluminum coil stock can be ordered to match any of our 11 exterior trim colors. Made from .018" thick aluminum, coil stock is available in 24" (610) x 50' (15240) rolls. Color-matched 1 ¼" (32)-long stainless steel trim nails are also available and can be ordered in 1 lb/454 kg boxes.

FIBREX® TRIM BOARD

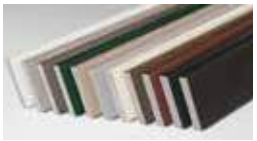

Available in the same 11 colors as our exterior trim, this solid cellular Fibrex trim board can be cut or ripped to size, and fastened using nails or screws. 3 ½" (89) x ¾" (19) thick in 10' (3048) lengths.

COLOR-MATCHED SEALANT

Color-matched sealant is available in Andersen exterior colors. This high-quality sealant can be used during the installation of all Andersen products.

DRIP CAP

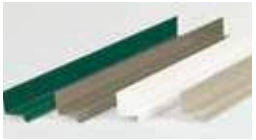

Included on A-Series windows with vertical (ribbon) joins. Heavy 24-gauge corrosion-resistant aluminum construction. Available in 6' (1829), 10' (3048) and 12'-7 ½" (3848) lengths, and in any of our 11 exterior trim colors.

EXTENSION JAMBS

Available for most Andersen products. See product sections in this guide for details.

VINYL CHANNELS

Rigid vinyl "J" and "h" channels are available in white, Sandtone and Terratone. "J" and "h" channels are ½" (13) deep and come in 150" (3810) lengths. "J" channels are ¾" (19) wide and "h" channels are 1" (25) wide. "H" channels are ¾" (19) deep and come in 84" (2134) and 150" (3810) lengths. White "H" channels are ¾" (19) wide. Sandtone and Terratone "H" channels are 1" (25) wide.

INSTALLATION INFORMATION

ROUGH OPENINGS

The purpose of a rough opening is to allow for proper spacing between the window or patio door unit and the building structure. The space is required for locating, leveling and squaring the unit during installation and to provide an area for insulation. A rough opening that is incorrectly sized may affect unit operation and may not allow for adequate fastening of the unit to the building structure. Andersen rough opening dimensions are provided as a guideline to help determine the minimum amount of space needed between the window or patio door and the building structure. See appropriate product sections for rough opening guidelines for each product.

Keep in mind that rough opening dimensions may need to be altered from published guidelines, depending on installation methods, joining methods, replacement methods, etc. For example, flashing systems can reduce the amount of available rough opening space and should be factored in when calculating rough opening dimensions. The use of support or joining materials will encroach on the rough opening and may require additional rough opening space between the unit and the building structure, depending on the thickness of the flashing system and joining materials used. To facilitate drainage, the rough opening sill plate should never slope toward the interior. For challenging environments and other information, refer to EEBA's (Energy and Environmental Building Association) Water Management Guide (**www.eeba.org**).

IMPORTANCE OF PROPER INSTALLATION

Proper installation and maintenance of Andersen products is essential to attain optimum performance and operation. Installation instructions that provide guidelines for proper installation are typically provided with Andersen products. They are also available by visiting **andersenwindows.com**. Remember that every installation is different, and Andersen strongly recommends consultation with the local supplier or an experienced contractor, architect or structural engineer prior to the installation of any Andersen product. The method of attachment for Andersen products, fastener selection and code compliance is the responsibility of the architect, building owner, contractor, installer and/or consumer. For more complete installation details, visit **andersenwindows.com** or see your Andersen supplier.

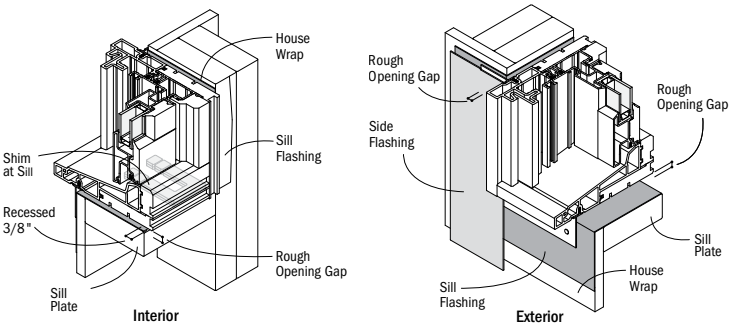

Example of window sill flashing in a membrane drainage system.

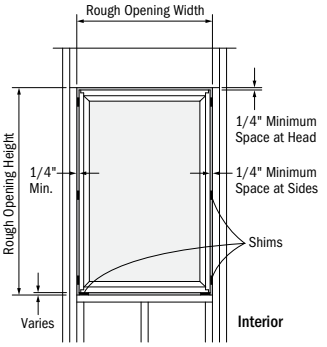

Example of window unit installed using Andersen published minimum rough opening dimensions.

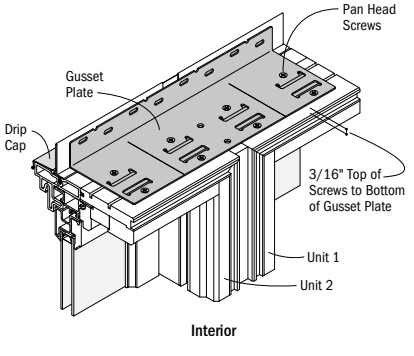

Example of two units joined together with the use of gusset plates and pan head screws that will require additional rough opening space.

GENERAL NOTES

When ordering, make certain you specify, then verify, the exact product, unit dimensions, configuration requirements, color and options you desire on each window or patio door. Before installing the product, we suggest you verify that it includes the features and options you ordered. Visit **andersenwindows.com** for product installation and joining guides. Printing limitations prohibit exact color duplication of products. View actual samples for building specifications. Andersen Corporation reserves the right to change details, specifications or sizes without notice. The customer assumes all risk of alterations made to Andersen products.

Dimensions in parentheses are in millimeters.

CODES

Appropriate selection of Andersen products that conform to all applicable laws, ordinances, building codes and safety requirements is the sole responsibility of the architect, designer, building owner and/or contractor. Check with your local building code officials for specific information. Unit wind load, performance grade and energy performance information is provided on pages 196-225. For up-to-date product performance information, visit **andersenwindows.com**. The performance of any building system depends on the design and construction of the building system in its entirety, which should meet building code requirements, as well as address product and material limitations, and local environment and climate.

DRIP CAPS

Drip caps are a specific type of flashing or trim used at the head of a window or door to direct water from the drainage plane out beyond the face of the unit.

FLASHING

Flashing is an important element in a building's water management system. It is used to shed and direct water to the building exterior or to the drainage plane. Flashing materials are typically applied starting from the bottom and working upward, with each successive layer overlapping the previous one in shingle fashion. Water infiltration problems in any type of building can be reduced by properly flashing and/or sealing around all building openings, including windows and doors.

USE OF SHIMS

Shims are used along the side jambs of windows and doors to center the unit in the rough opening and to position it plumb, level and square. In addition, shims are always required for windows under the sill at the side jambs to lift it off the rough opening sill plate. Shims also enable a straight frame for proper weatherstrip contact and unit operation. If not placed properly, unit performance and operation can be affected. Use waterproof shims capable of supporting the weight of the product. When using tapered shims, use them in pairs with the tapers opposing each other to avoid tilting the unit or twisting (rotating) of the jambs.

SEALANTS

Sealants are elastic materials used to block the passage of water and/or air while allowing movement between the two sides of the joint. A sealant should bond tightly, and be able to expand and contract to accommodate joint movement without cracking or tearing away from the substrate. Surfaces must be clean, dry and sound for adequate sealant adhesion. Choose a sealant that is compatible with, and that will adhere adequately to, all building materials used in the window and patio door area. Proper sealant joint design is based upon the expected movement of adjacent materials and the movement capability of the sealant. A general rule of thumb is that the depth of the sealant joint should be equal to half the width (D = W/2), but generally not less than ¼" (6) or more than ½" (13). Foam-plastic backer rod can be used to limit the depth of the sealant joint, to provide a backstop for tooling the sealant without damage to the bond. It also acts as a bond breaker to help minimize stress in the sealant. Sealants should be maintained seasonally, and repaired and/or replaced as needed.

GENERAL INSTALLATION GUIDELINES

1. Read and follow the installation guide in its entirety.
2. Decide whether you are integrating to a surface barrier or a membrane drainage system before installing the product. The appropriate method for your installation may vary based on building design, application and industry practices.
3. Make certain the drainage plane is continuous (proper overlaps to shed water, taped seams, etc.).
4. Andersen products should be installed only in the vertical position.
5. Check the rough opening to make sure it is sized properly, is square and is level.
6. Install the window or door plumb.
7. Install the window or door level.
8. Install the window or door square. Diagonal measurements should be within ⅛" (3).
9. Follow installation instructions to properly locate shims and to make sure that units are plumb, level and square. Shims are always required under the window jambs at the sill and along the jambs on the sides for windows and doors.
10. Check for squareness of unit before final anchoring of the product into the wall.
11. Anchor unit as directed with appropriate fasteners.
12. Integrate the window and door into the drainage plane of the wall using quality flashing and sealing materials. All flashing materials should be properly overlapped to shed water.
13. Allow ¼" (6) minimum space for a sealant joint around perimeter of unit between exterior finish materials and unit.
14. Insulate and seal the interior cavity between the window or door frame and the rough opening.
15. Check operation before application of interior trim.
16. Stain and/or seal all unfinished wood surfaces promptly to minimize moisture absorption.

EXTERIOR PAINTING/SEALING OF ANDERSEN® PRODUCTS

The exterior of some Andersen products may be painted or stained. However, improper painting and staining may cause damage to vinyl, aluminum and other exterior materials.

CAUTIONS

1. Do not apply any type of film to insulating glass. Thermal stress and glass damage can result. Andersen Corporation is not responsible for product performance when films are applied to Andersen products.
2. The use of removable insulating materials such as insulated window coverings, shutters and other shading devices may also cause thermal stress conditions and/or deformation of protective vinyl. In addition, excessive condensation may result, which can have a deteriorating effect on the window or door unit(s) involved. Andersen Corporation is not responsible for product performance when these kinds of materials or devices are applied to or used in conjunction with Andersen products.
3. In wall construction utilizing brick facades, leave adequate clearance between sill, jambs and brick for sealing and dimensional change of framework.
4. Acid solutions commonly used to wash brick and other masonry materials will damage glass, fasteners, hardware and metal flashing. Protect unit and follow cleaning product instructions carefully. Damage caused by acid solution is not covered under the Andersen limited warranty.
5. Andersen windows may be combined in almost unlimited ribbons or stacks if each unit is positively secured to structural elements on opposing sides and if the proper joining system is used. See page 196 for more information.

SAFETY GLASS

Unless specifically ordered, Andersen windows are not made with safety glass and, if broken, the glass could fragment, causing injury. Andersen windows may be ordered with tempered glass which may reduce the likelihood of injury when broken. All Andersen patio doors are made with tempered glass. Differences in appearance between tempered and non-tempered glass can be expected. Slight visual distortions may be noticeable and occur normally as a result of the tempering process. Building codes require safety glass in locations adjacent to or near doors and other locations.

WINDOW AND PATIO DOOR SAFETY

Windows may provide a secondary avenue of escape or rescue in an emergency, such as a fire. Every family should develop an escape plan and make sure family members know how to escape from the home in an emergency. In your plan, include two ways to escape from every room in case one way is blocked by fire or smoke, and make sure you have a designated meeting place outside. A window or a patio door is an alternate means of escape or rescue. Practice your plan until each member of the family understands it and is able to escape without assistance. Remember, you may not be able to reach children during a fire emergency. Teach children – even very young children – that they must escape from a fire in the home and never hide from the fire or from emergency personnel.

LOOKOUT FOR KIDS® PROGRAM

The Consumer Product Safety Commission has said: "Keep children away from open windows to prevent falls. Don't depend on insect screens to keep the child from falling out of the window. They are designed to keep insects out, not children in. Avoid placing furniture near windows to keep children from climbing to a window seat or sill." In an effort to educate consumers about the potential for child falls from windows, Andersen Corporation created the LookOut For Kids Program. It combines a window and door safety brochure and specific product instructions to help make window and door safety an important priority for consumers. For more information on child safety, write:

Andersen Corporation
LookOut For Kids Program
100 Fourth Avenue North
Bayport, MN 55003
Call **800-313-8889** or email
lofk@andersencorp.com

LOOK OUT! for kids®

Dimensions in parentheses are in millimeters.

Andersen® windows and patio doors can make significant contributions to the success of sustainable design strategies

As a charter member of the U.S. Green Building Council, we're active supporters of certified green buildings. Our products can help customers in pursuing green building programs, such as Leadership in Energy and Environmental Design (LEED®), the National Green Building Standard, Green Globes, GreenStar and more. Below is an overview of how our products may assist project teams with pursuing LEED v4 or the NAHB National Green Building Standard rating systems. More detailed credit summaries, as well as information about how Andersen products can support earlier versions of LEED certification (e.g., LEED v3 or LEED 2008), are available at **andersenwindows.com**.

LEED V4 FOR BUILDING DESIGN AND CONSTRUCTION: NEW CONSTRUCTION AND MAJOR RENOVATIONS

Integrative Process Credit:

Energy & Atmosphere

- Minimum energy performance prerequisite
- Optimize energy performance credit
- Renewable energy production credit
- Green power and carbon offsets credit

Materials & Resources

- Construction and demolition waste management planning credit
- Building product disclosure and optimization sourcing of raw materials credit
- Construction and demolition waste management credit

Indoor Environmental Quality

- Minimum indoor air quality performance prerequisite
- Minimum acoustic performance prerequisite – schools
- Enhanced indoor air quality strategies credit
- Low-emitting materials credit
- Thermal comfort credit
- Daylight credit
- Quality views credit
- Acoustic performance credit (option 2)

LEED V4 FOR BUILDING DESIGN AND CONSTRUCTION: HOMES AND MULTI-FAMILY MIDRISES

Energy & Atmosphere

- Minimum energy performance prerequisite
- Education of the homeowner, tenant or building prerequisite
- Annual energy use credit
- Building orientation for passive solar credit
- Air infiltration credit
- Windows credit

Materials & Resources

- Durability management prerequisite
- Environmentally preferable products credit
- Construction waste management credit

Indoor Environmental Quality

- Ventilation prerequisite
- Low-emitting products credit

ANSI ICC/ASHRAE 700-2015 NATIONAL GREEN BUILDING STANDARD

NGBS section numbers are referenced in parentheses.

Resource Efficiency

- Prefinished materials (601.7)
- Flashing (602.12)
- Exterior doors, including storm doors (602.1.10)
- Recycled construction materials (605.3)
- Bio-based products (606.1)
- Wood-based products (606.2)
- Manufacturer's environmental management system concepts (611.1)

Energy Efficiency

- Mandatory requirements (701.1)
- Building thermal envelope air sealing (701.4.3.1)
- Multi-family air leakage alternative (701.4.3.3)
- Fenestration air leakage (701.4.3.4)
- ICC IECC analysis (702.2.1)
- Energy performance analysis (702.2.2)
- UA improvement (703.2.1)
- Fenestration (703.2.5)
- Sun-tempered design (703.7.1)
- Passive cooling design (703.7.3)
- Passive solar heating design (703.7.4)

Indoor Environmental Quality

- Wood materials (901.4)
- Interior architectural coatings (901.9)
- Interior adhesives & sealants (901.9)
- Operable windows & sliding glass doors (902.1.5)

Energy Efficient

- Homeowner's manual (1001.1)
- Building construction manual (1002.1)

THE ENVIRONMENT HAS A BUSINESS PARTNER

Respect for the environment is nothing new at Andersen. For more than a century, it has been part of who we are. Our commitment to recycle and reclaim materials began simply because it was good business. Now it's part of our broader commitment to sustainability and responsible stewardship of all of our resources. Andersen is committed to providing you with long-lasting,* energy-efficient windows and patio doors. Visit **andersenwindows.com/sustainability** for more information.

Andersen® products are certified under the National Fenestration Rating Council (NFRC) voluntary third-party certification program designed to ensure accurate energy performance ratings and labeling.

Andersen was one of the first U.S. window manufacturers to receive the Forest Stewardship Council® (FSC®) Chain-of-Custody certification (FSC CO16636). This certification is awarded to companies that meet FSC standards for traceability in their wood supply chain. Ask your sales representative about the availability of FSC certified products.

The Window & Door Manufacturers Association (WDMA) Hallmark Certification program includes product testing and quality-control process audits to verify that Andersen windows and doors are produced in conformance with the industry standards for air, water resistance and structural performance.

Andersen Corporation is proud to be an ENERGY STAR® partner. For over 115 years, Andersen has built a reputation for environmental stewardship and energy-efficient products. In fact, Andersen has been part of the ENERGY STAR program since it started and was the first window manufacturer to be named an ENERGY STAR National Window Partner of the Year in 1999.

Andersen A-Series casement, awning and fixed transom products are Phius (Passive House Institute US) certified products. Phius is the smartest path to a zero-carbon built environment, certifying the majority of all passive house projects in North America with locally tailored, globally applicable passive building standards.

*Visit andersenwindows.com/warranty for details.

All logos and marks are trademarks of their respective owners.

67 A-Series Specialty Windows

63 A-Series Window Custom Sizes

60 A-Series Window Joining Details

52 A-Series Transom Windows

44 A-Series Picture Windows

38 A-Series Double-Hung Windows

26 A-Series Casement & Awning Windows

21 A-Series Window Overview

168 A-Series Patio Door Joining Details

156 A-Series Patio Door Sidelights & Transoms

150 A-Series Hinged Outswing Patio Doors

134 A-Series Hinged Inswing Patio Doors

126 A-Series Gliding Patio Doors

119 A-Series Patio Door Overview

113 A-Series Complementary Casement Windows

112 A-Series Specialty Window Joining Details

196 Combination Designs, Product Performance & Installation

189 Exterior Trim

177 A-Series Complementary Curved Top Patio Doors

172 A-Series Patio Door Custom Sizes

ANDERSEN®
WINDOWS & DOORS

All trademarks where denoted are marks of their respective owners.
©2025 Andersen Corporation. All rights reserved. 04/25 Part #9067302

PDF NAVIGATION TIPS

Welcome to an overview of the enhanced navigation tools available in this PDF. Here are some simple tips on PDF navigation. Before you begin be sure you are using the latest version of **Adobe Acrobat Reader DC**, available at – **https://get.adobe.com/reader/**

To watch a 3-minute tutorial on navigating catalog PDFs, go to: https://youtu.be/sWWnYn60N3Y

BOOKMARK NAVIGATION

1

Acrobat will display the bookmarks panel when you open the PDF.

Bookmarks are the easiest way to find specific product information.

Select a topic and that page will be displayed.

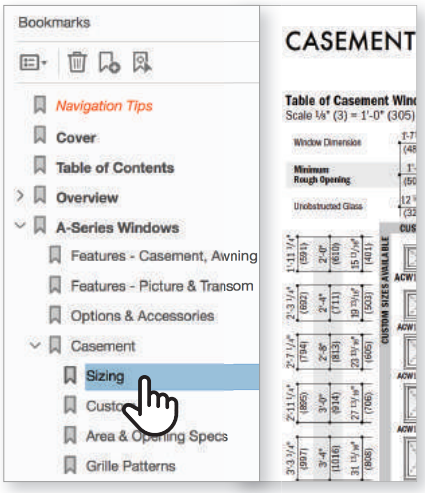

2

If you need to print a specific section, **right click on that section** within in the bookmarks panel and choose **"Print Section"**.

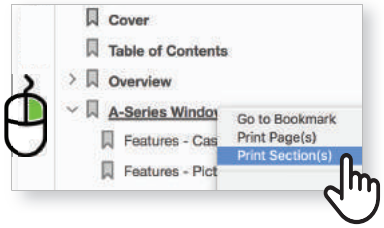

LINKS AND URL NAVIGATION

1

You can also use the **embedded links** to navigate between sections. All links are underlined in blue.

2

Website links automatically open in your web browser.

PDF NAVIGATION TIPS Cont.

Add additional navigation tools by adjusting the default settings in Acrobat.

TOOL BAR NAVIGATION

1

To add a **"Jump Back" Button** to your tool bar. **Right click on tool bar**, select **Show Page Navigation Tools** and choose **Show All Page Navigation Tools**.

Right and left facing arrows are added to the tool bar allowing you to go back or forward to the last page you viewed.

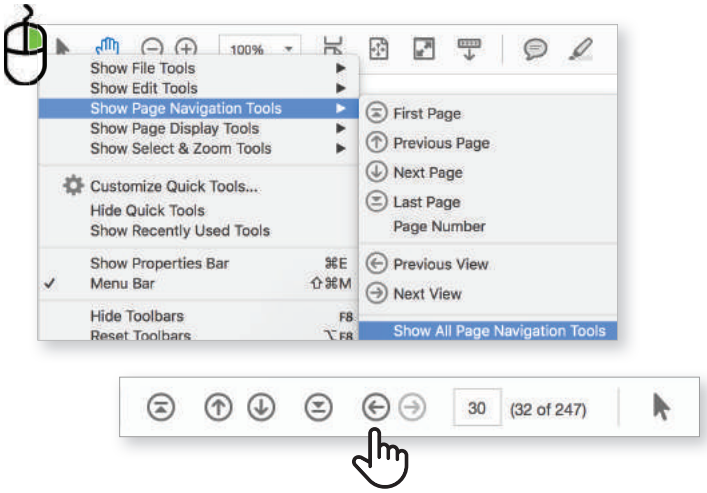

2

Another helpful tool is the **Loupe Tool**.

It allows you to zoom in on the page without having to increase the page size.

To add a **Loupe Tool** to your tool bar, **right click on tool bar**, select **Show Select & Zoom Tools** and then choose **Show All Select & Zoom Tools.**

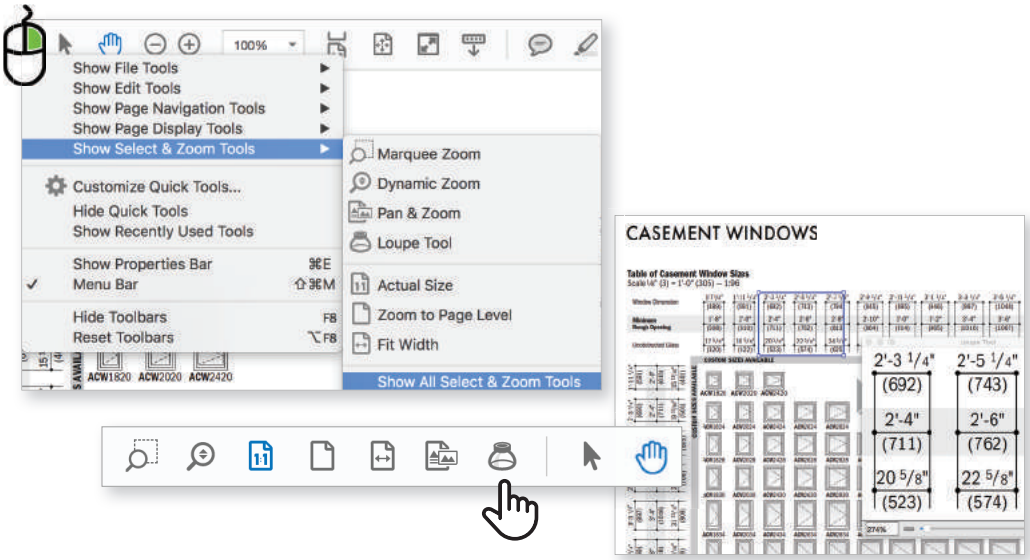

3

You can also use the **commenting tools**. Add a post-it note with your comments or highlight important information.

Be sure to save the file.

To watch a 3-minute tutorial on navigating catalog PDFs, go to: **https://youtu.be/sWWnYn60N3Y**

We are always looking for ways to improve.

Please send feedback to **webmarketing@andersencorp.com**.